EDS94SPP101
13550890

L-force *Drives*

Hardware Manual

9400

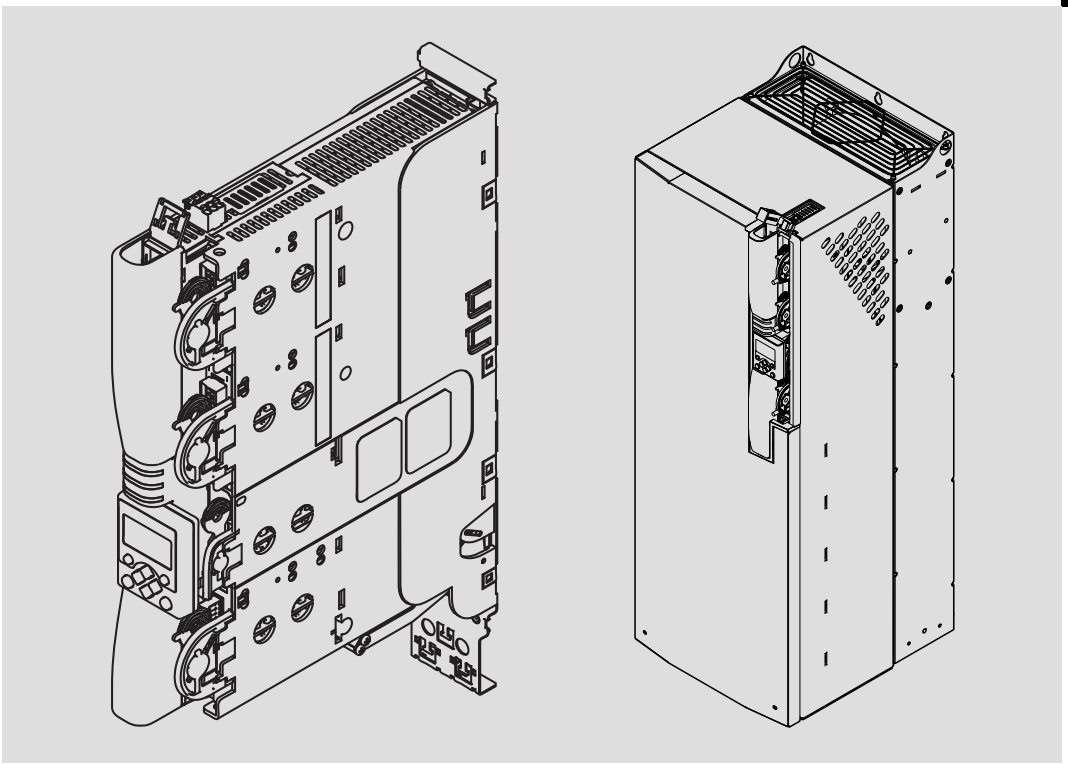

E94A..., E94B..., E94C...

Servo Drives 9400

Lenze

1 Preface 10
1.1 The 9400 Servo Drives product range 10
1.1.1 The system 10
1.1.2 Features 10
1.1.3 System overview 10
1.2 About this Hardware Manual 12
1.2.1 Information provided by the Hardware Manual 12
1.2.2 Products to which the Hardware Manual applies 13
1.3 Document history 17
1.4 Conventions used 18
1.5 Notes used 19
1.6 Legal regulations 20
1.7 Terms and abbreviations used 22

2 Safety instructions 24
2.1 General safety and application notes for Lenze controllers 24
2.2 General safety and application notes for Lenze motors 27
2.3 Residual hazards 30

3 Single-axis controllers 31
3.1 Device features 31
3.2 Overview of the devices 32
3.3 General data and operating conditions 33
3.4 Rated data 42
3.4.1 Overview 43
3.4.2 Operation at rated mains voltage 230 V 46
3.4.3 Operation at rated mains voltage 400 V 49
3.4.4 Operation with rated mains voltage 480 V 55
3.4.5 Fuses and cable cross-sections 61
3.4.6 Overcurrent operation 65
3.4.7 Current-time diagrams 71
3.5 Device description 80
3.5.1 Devices in the range 2 ... 24 A (0.37 ... 11 kW) 80
3.5.2 Devices in the range 32 ... 104 A (15 ... 55 kW) 82
3.5.3 Devices in the range 145 ... 245 A (75 ... 130 kW) 84
3.5.4 Device 292 A (150 kW) 86
3.5.5 Devices in the range 366 ... 460 A (190 ... 240 kW) 88

3.6 Mechanical installation 90
3.6.1 Important notes 90
3.6.2 Devices in the range 2 ... 24 A (0.37 ... 11 kW) 91
3.6.3 Devices in the range 32 ... 104 A (15 ... 55 kW) 94
3.6.4 Devices in the range 145 ... 292 A (75 ... 150 kW) 95
3.6.5 Devices in the range 366 ... 460 A (190 ... 240 kW) 96
3.7 Wiring 97
3.7.1 Important notes 97
3.7.2 Safety instructions for the installation according to UL/CSA 99
3.7.3 Earthing of internal EMC filters 109
3.7.4 Devices in the range 2 ... 24 A (0.37 ... 11 kW) 114
3.7.5 Devices in the range 32 ... 104 A (15 ... 55 kW) 123
3.7.6 Devices in the range 145 ... 245 A (75 ... 130 kW) 128
3.7.7 Device 292 A (150 kW) 136
3.7.8 Devices in the range 366 ... 460 A (190 ... 240 kW) 142
3.8 Control terminals 148
3.9 Device modules 165
3.10 Preparing the commissioning procedure 166

4 Multi-axis controllers 167

4.1 Device features 167
4.2 Overview of the devices 168
4.3 General data and operating conditions 169
4.4 Rated data 174
4.4.1 Overview 174
4.4.2 Operation in 230-V-AC system 176
4.4.3 Operation in 400-V-AC system 177
4.4.4 Operation in 480-V-AC system 178
4.4.5 Fuses and cable cross-sections 179
4.4.6 Overcurrent operation 179
4.4.7 Current-time diagrams 183
4.5 Device description 189
4.5.1 Devices in the range 2 ... 32 A (0.37 ... 15 kW) 190
4.5.2 Devices in the range 47 ... 59 A (22 ... 30 kW) 192
4.6 Mechanical installation 194
4.6.1 Important notes 194
4.6.2 Devices in the range 2 ... 32 A (0.37 ... 15 kW) 195
4.6.3 Devices in the range 47 ... 59 A (22 ... 30 kW) 199

4.7 Wiring ... 200
4.7.1 Important notes ... 200
4.7.2 Safety instructions for the installation according to UL/CSA ... 202
4.7.3 Earthing of internal EMC filters ... 207
4.7.4 Devices in the range 2 ... 32 A (0.37 ... 15 kW) ... 209
4.7.5 Devices in the range 47 ... 59 A (22 ... 30 kW) ... 218
4.8 Control terminals ... 222
4.9 Device modules ... 239
4.10 Preparing the commissioning procedure ... 240

5 Power supply module ... 241
5.1 Device features ... 241
5.2 General data and operating conditions ... 242
5.3 Rated data ... 245
5.3.1 Overview ... 245
5.3.2 Operation at rated mains voltage 230 V ... 246
5.3.3 Operation at rated mains voltage 400 V ... 248
5.3.4 Operation with rated mains voltage 480 V ... 250
5.3.5 Fuses and cable cross-sections ... 252
5.3.6 Mains filters for power supply modules ... 254
5.4 Device description ... 257
5.4.1 Devices in the range 10 ... 36 A (4 ... 18 kW) ... 258
5.4.2 Devices in the range 100 ... 245 A (48 ... 119 kW) ... 260
5.5 Mechanical installation ... 262
5.5.1 Important notes ... 262
5.5.2 Devices in the range 10 ... 36 A (4 ... 18 kW) ... 263
5.5.3 Devices in the range 100 ... 245 A (48 ... 119 kW) ... 267
5.6 Wiring ... 271
5.6.1 Important notes ... 271
5.6.2 Safety instructions for the installation according to UL/CSA ... 272
5.6.3 Design of the cables ... 275
5.6.4 Devices in the range 10 ... 36 A (4 ... 18 kW) ... 276
5.6.5 Devices in the range 100 ... 245 A (48 ... 119 kW) ... 280
5.7 Control terminals ... 285
5.8 Final works ... 288

6 Regenerative power supply modules ... 289
6.1 Device features ... 289
6.2 General data and operating conditions ... 290

6.3 Rated data 293
6.3.1 Overview 293
6.3.2 Operation at rated mains voltage 230 V 294
6.3.3 Operation at rated mains voltage 400 V 296
6.3.4 Operation with rated mains voltage 480 V 298
6.3.5 Regenerative feedback with brake chopper 300
6.3.6 Fuses and cable cross-sections 302
6.3.7 Current-time diagrams 303
6.3.8 Mains filters for regenerative power supply modules 306
6.4 Device description 309
6.5 Mechanical installation 313
6.5.1 Important notes 313
6.5.2 Dimensions 314
6.5.3 Arrangement of the devices 317
6.5.4 Mounting steps 318
6.6 Wiring 319
6.6.1 Important notes 319
6.6.2 Safety instructions for the installation according to UL/CSA 321
6.6.3 Connection plan 323
6.6.4 Earthing of internal EMC filters 324
6.6.5 Connecting busbars 327
6.6.6 Design of the cables 328
6.6.7 How to connect the shield 328
6.6.8 Terminal assignment 329
6.6.9 Wiring of control connections 332
6.7 Device modules 337
6.8 Final works 338
6.8.1 Initial commissioning on 400 V mains voltage 338
6.8.2 Initial commissioning on 230 V or 480 V mains voltage 338
6.8.3 Further settings 338

7 DC-bus operation 339

7.1 Introduction 339
7.1.1 Terminology and abbreviations used 339
7.1.2 Comparison single-axis controllers / multi-axis controllers 340
7.1.3 Advantages of a drive system 340
7.1.4 General information on the accessories 341
7.2 Conditions for trouble-free DC-bus operation 342
7.2.1 Voltages 342
7.2.2 Number of feeding points 342
7.2.3 Other conditions 342

7.3 DC-bus variants 343
7.3.1 Supply from a supply module 343
7.3.2 Supply from controllers 344
7.4 Rated data 345
7.4.1 General data 345
7.4.2 DC-supply power 347
7.4.3 DC-power requirements 351
7.4.4 DC fuses 353
7.5 Basic dimensioning 354
7.5.1 General information 354
7.5.2 Power distribution of controllers 355
7.5.3 Motor efficiency 356
7.5.4 Power loss of devices 356
7.5.5 Determining the power requirements 356
7.5.6 Determining the regenerative power requirements 356
7.5.7 Cable protection 357
7.5.8 Filters 357
7.5.9 Cables 361
7.6 Braking operation in a drive system 362
7.6.1 Basic considerations 362
7.7 Application examples 363
7.7.1 Example 1 - supply module with multi-axis controllers 363
7.7.2 Example 2 - single-axis controller with multi axes 364

8 Accessories (overview) 365

8.1 System overview 365
8.2 Overview of accessories 367
8.3 Communication modules 370
8.3.1 Safety instructions 370
8.3.2 Important notes 370
8.3.3 Mounting 371
8.3.4 Dismounting 371
8.3.5 Possible device module combinations 372
8.3.6 Ethernet interface 373
8.3.7 DeviceNet™ 392
8.3.8 PROFIBUS® 398
8.3.9 PROFINET® 403
8.3.10 CANopen® 406
8.3.11 INTERBUS 409

8.4 Function modules 412
8.4.1 Safety instructions 412
8.4.2 Mounting 413
8.4.3 Dismounting 413
8.4.4 Digital frequency 414
8.5 Memory modules 418
8.5.1 Safety instructions 418
8.5.2 Mounting 419
8.5.3 Dismounting 419
8.5.4 Setting CAN node address and baud rate 420
8.5.5 Memory module MM220 422
8.5.6 Memory module MM330 423
8.5.7 Memory module MM340 424
8.5.8 Memory module MM430 425
8.5.9 Memory module MM440 426
8.6 Safety modules 427
8.6.1 Safety instructions 427
8.6.2 Identification 428
8.6.3 Mounting 429
8.6.4 Dismounting 429
8.6.5 SM0 430
8.6.6 SM100 431
8.6.7 SM301 436
8.6.8 SM302 446
8.7 Motor holding brake control modules 447
8.7.1 Overview 447
8.7.2 Safety instructions 451
8.7.3 Safety instructions for the installation according to UL/CSA 452
8.7.4 Motor holding brake control module E94AZHX0051 455
8.7.5 Motor holding brake control module E94AZHA0051 460
8.7.6 Motor holding brake control module E94AZHY0101 466
8.7.7 Motor holding brake control module E94AZHB0101 473
8.7.8 Motor holding brake control module E94AZHY0025 480
8.7.9 Motor holding brake control module E94AZHN0025 485
8.7.10 Motor holding brake control module E94AZHY0026 491
8.7.11 Motor holding brake control module E94AZHN0026 497
8.8 Accessories for diagnostics 502
8.8.1 USB diagnostic adapter 502
8.8.2 Keypad 504
8.8.3 Hand-held terminal 511

8.9 Components for operation in the DC-bus connection 516
8.9.1 DC-feeding point 516
8.9.2 Busbar mounting set E94AZJA003 525
8.9.3 Busbar mounting set E94AZJA007 528
8.9.4 Busbar mounting set E94AZJA024 531
8.10 Filters 534
8.10.1 Mains filters for single-axis controllers E94AZMSxxxx 3 ... 31 A 536
8.10.2 Mains filters for power supply modules E94AZMPxxxx (8 ... 29 A) 543
8.10.3 Mains filters for power supply modules E94AZMPxxxx (82 ... 200 A) . . 550
8.10.4 Mains filters for regenerative power supply modules E94AZMRxxxx (26 ... 47 A) 558
8.10.5 RFI filters for single-axis controllers E94AZRSxxxx (4 ... 29 A) 565
8.10.6 RFI filters for single-axis controllers E94AZRSxxxx (54 ... 95 A) 572
8.10.7 RFI filters for single-axis controllers E94AZRSxxxx (3F480-xxx.290EM) 180 ... 415 A 579
8.10.8 RFI filters for power supply modules E94AZRPxxxx (8 ... 29 A) 583
8.10.9 RFI filters for power supply modules E94AZRPxxxx (82 ... 200 A) 590
8.10.10 Sinusoidal filters EZS3-xxxA200 4 ... 90 A 597
8.10.11 Sinusoidal filters EZS3-xxxA200 115 ... 150 A 605
8.10.12 Sinusoidal filters EZS3-xxxA200 180 ... 480 A 611
8.11 General accessories 616
8.11.1 Shield mounting 616
8.11.2 Brake resistors 619
8.11.3 Power supply unit 632

9 Index 640

1 Preface

1.1 The 9400 Servo Drives product range

1.1.1 The system

9400 Servo Drives range is the product family with the components required for an intelligent servo drive system in automation. The product range comprises

- servo drive controllers
- I/O components
- software
- accessories
- motors
- gearboxes
- DC-supply modules

1.1.2 Features

The Servo Drives 9400 feature:

- compact design
- wide power range
- innovative installation concept
- intelligent technology functions
- high control precision
- scalable safety technology

1.1.3 System overview

The following figure shows the most important components for the implementation of a drive system with the Servo Drives 9400 product range.

On the way from the mains connection to the motor, you can see the basic principle of a drive system on the left path. On the right path, the basic principle of a single-axis drive is described.

In accordance with the requirements of your drive solution, your drive system can be equipped or extended with specially adapted components.

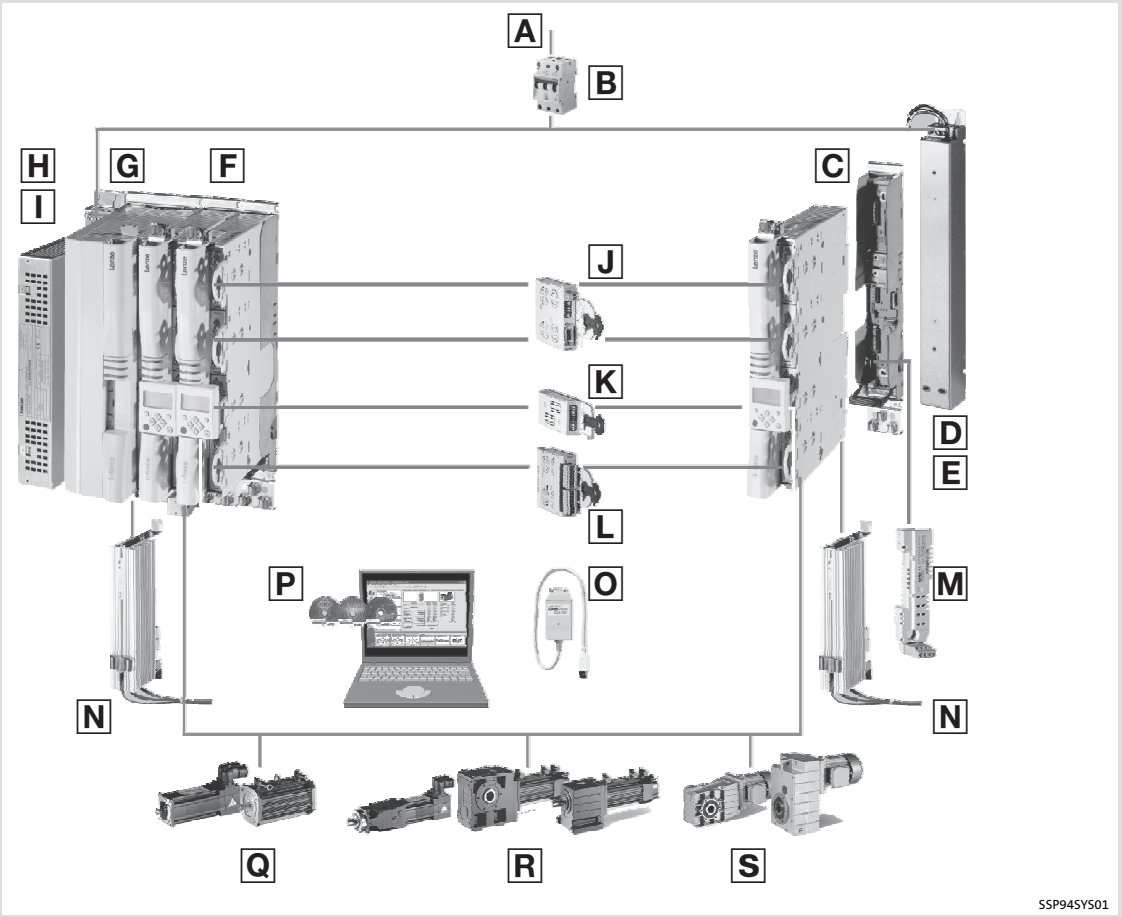

A	Mains voltage 3/PE AC 180 ... 528 V ±0 % or 3/PE AC 340 ... 528 V ±0 % (depending on the device size/device power)	
B	Mains fusing (not contained in the delivery programme)	
C	Single Drives 9400 and corresponding installation backplanes	📖 31
D	Mains filter for Single Drives 9400	📖 536
E	RFI filter for Single Drives 9400	📖 565
F	Multi Drives 9400 and corresponding installation backplanes	📖 167
G	Power supply modules 9400 (for DC bus installations with Multi Drives 9400)	📖 241, 📖 289
H	Mains filter for power supply modules 9400	📖 543
I	RFI filter for power supply modules 9400	📖 583

Equipment for all axis modules (device-dependent options):

J	Communication modules and extension modules	📖 370
K	Memory modules	📖 418
L	Safety modules	📖 427
M	Motor holding brake control modules	📖 447
N	Brake resistors	📖 619
O	Diagnostic adapters	📖 502
P	L-force Engineer (software)	
Q	Servo motors	(motor catalogue)
R	Geared servo motors	(")
S	Standard geared motors	(")
	Motor cables/system cables	(manual "System cables")

1.2 About this Hardware Manual

1.2.1 Information provided by the Hardware Manual

Target group

This Hardware Manual is intended for all persons who install, commission, and adjust 9400 servo controllers.

Together with the catalog it forms the basis of project planning for the manufacturers of machines and plants.

Contents

This Hardware Manual is meant as an addition to the Mounting Instructions included in the scope of supply:

- The features and functions are described in detail.
- It provides detailed information on additional ranges of application.

How to find information

Each chapter forms a complete unit and informs you about an individual subject:

- You therefore only have to read the chapter containing the information you need.
- The Table of Contents and Index help you to find all information about a certain topic.
- Descriptions and data of other Lenze products (drive PLC, Lenze geared motors, Lenze motors, ...) can be found in the corresponding catalogs, Operating Instructions and Manuals. The required documentation can be ordered at your Lenze sales partner or downloaded as PDF file from the Internet.



Tip!

Information and tools concerning the Lenze products can be found in the download area at

www.lenze.com

1.2.2 Products to which the Hardware Manual applies

Power modules

1 2 3	4	5	6	7	8 9 10	11	12	13 14	15 16	17 18	19
E94	x	x	x	E	xxx	x	x	xx	xx	xx	-

Type / product range

9400 Servo Drives

Version

A = 1. (max. 1999 Hz)
B = 2. (from 145 A/75 kW, max. 1999 Hz)
C = 2. (max. 599 Hz)

Version

S = single-axis controller (Single Drive)
M = multi-axis controller (Multi Drive)
P = power supply module
R = regenerative power supply module

Variant

H = HighLine
N = not relevant
P = PLC

Mechanical version

E = Installation

Rated current (rounded)

e.g. 007 = 7 A, 024 = 23.5 A

Voltage class

2 = 230 V ~ / 300 V =
4 = 400 V ~ / 540 V =

Safety module in MSI (place 7 of the extension modules)

A ... F

Memory module in MMI (places 7 and 8 of the extension modules)

22 ... 44

Extension module in MXI2 (places 7 and 8 of the extension modules)

xx

Extension module in MXI1 (places 7 and 8 of the extension modules)

xx

In the case of complete devices, the type code can contain a 5-place item of information regarding the configured installation backplane, whereby this information appears at place 19 after the separator (see places 7 to 14, power-related accessories). In addition, a 6-place item of information regarding an integrated motor holding brake control module can be contained (see places 6 to 14, performance-related accessories. ”N” means ”Not relevant”.

With the help of the type code, you can identify supplied products on the basis of the information on the nameplate. In the product catalogue, you can find the possible configuration in order to order the product.

Extension modules

123	4	5	6	78
E94	x	Y	x	xx

Type / product range

9400 Servo Drives

Version

A = 1.
N = not relevant

Identification

Y = module

Module group

C = communication
F = feedback
M = memory
A = safety

Module identification

communication

CA = CANopen®
DN = DeviceNet™
EN = Ethernet 2 port
EO = EtherNet/IP™
EP = POWERLINK
EC = POWERLINK CN
ET = EtherCAT®
PM = PROFIBUS®
ER = PROFINET®
IB = INTERBUS

Feedback

LF = digital frequency

Memory

22 = Memory module MM220 with MC HighLevel licence
33 = Memory module MM330 with MC TopLevel licence
34 = Memory module MM340 with PLC licence
43 = Memory module MMx20 with MC TopLevel licence
44 = Memory module MMx40 with PLC licence

Safety

A = SM0 safety module
B = SM100 safety module
E = SM301safety module
F = SM302 safety module

Power-related accessories

1 2 3	4	5	6	7	9 10 11	14
E94	A	Z	x	x	xxx	x

Type / product range

9400 Servo Drives

Version

Identification

Z = accessories

Component class 1

H = brake control
P = mounting backplane
M = mains filter
R = RFI filter

Component class 2

M = multiple axes
P = power supply module
R = regenerative module
S = single axis
X,Y = type
N = not specified

Rated current (rounded)

e.g.
008 = 8 A
024 = 23.5 A
...

Voltage class

1 = 24 V =
2 = 230 V ~ / 300 V =
4 = 400 V ~ / 540 V =

Power-independent accessories

123	4	5	6	789
E94	A	Z	x	xxx

Type / product range

9400 Servo Drives

Version

Identification

Z = accessories

Accessory group

J = mechanical components, other
S = software
K = keypad
N = not specified

Module identification

1.3 Document history

Material number	Version			Description
13550890	11.0	06/2018	TD29	New version E94C...
13543133	10.2	02/2018	TD29	Corrected device features
13543133	10.1	01/2018	TD29	Data concerning UL fuses added
13543133	10.0	09/2017	TD29	General corrections and standardisation
13514043	9.0	11/2016	TD29	New devices inserted; old devices removed New UL specifications in preparation Corrections
13480643	8.0	09/2015	TD15	Additions: Conformity with EAC Corrections Document structure updated
13344991	7.1	07/2010	TD29	Additions, corrections
13344991	7.0	07/2010	TD29	Additions, corrections
13320181	6.0	11/2009	TD15	Additions, corrections
13280002	5.0	11/2008	TD15	Additions, corrections
13261288	4.2	07/2008	TD15	Additions, corrections
13256547	4.1	06/2008	TD15	Additions, corrections
13225695	4.0	04/2007	TD15	Additions, corrections
13192254	3.1	03/2007	TD15	Additions, corrections
13192254	3.0	02/2007	TD15	Additions, corrections
13095102	2.0	09/2006	TD15	Additions, corrections (field test)
13095102	1.0	12/2005	TD15	First edition (field test)

1.4 Conventions used

This documentation uses the following conventions to distinguish between different types of information:

Spelling of numbers		
Decimal separator	Point	In general, the decimal point is used. For instance: 1234.56
Warnings		
UL warnings		Given in English and French
UR warnings		
Text		
Program name	» «	PC software For example: »Engineer«, »Global Drive Control« (GDC)
Icons		
Page reference	🕮	Reference to another page with additional information For instance: 🕮 16 = see page 16
Documentation reference		Reference to another documentation with additional information For example: EDKxxx = see documentation EDKxxx

1.5 Notes used

The following pictographs and signal words are used in this documentation to indicate dangers and important information:

Safety instructions

Structure of safety instructions:



Danger!

(characterises the type and severity of danger)

Note

(describes the danger and gives information about how to prevent dangerous situations)

Pictograph and signal word	Meaning
 **Danger!**	**Danger of personal injury through dangerous electrical voltage.** Reference to an imminent danger that may result in death or serious personal injury if the corresponding measures are not taken.
 **Danger!**	**Danger of personal injury through a general source of danger.** Reference to an imminent danger that may result in death or serious personal injury if the corresponding measures are not taken.
 **Stop!**	**Danger of property damage.** Reference to a possible danger that may result in property damage if the corresponding measures are not taken.

Application notes

Pictograph and signal word	Meaning
 **Note!**	Important note to ensure troublefree operation
 **Tip!**	Useful tip for simple handling
	Reference to another documentation

Special safety instructions and application notes

Pictograph and signal word	Meaning
 **Warnings!**	**Safety note or application note for the operation according to UL or CSA requirements.** The measures are required to meet the requirements according to UL or CSA.
 **Warnings!**	

1.6 Legal regulations

Labelling

Lenze drive controllers are clearly labelled and defined by the contents of the nameplate.

Manufacturer

Lenze Automation GmbH, Postfach 10 13 52, 31763 Hameln, Hans-Lenze-Str. 1, 31855 Aerzen

CE conformity

Complies with the ”Low voltage” EC Directive

Application as directed

The following applies to 9400 servo controllers and the accessories:

- They must only be operated under the operating conditions described in this Hardware Manual.
- They are components for open and closed loop control of control variable speed drives with asynchronous standard motors, asynchronous servo motors, PM synchronous servo motors.
- They are components for installation into a machine.
- They are components used for assembly together with other components to form a machine.
- They comply with the protection requirements of the ”Low Voltage” EC Directive.
- They are not machines for the purposes of the ”EC ”Machinery” Directive.
- They are not to be used as household appliances but for industrial purposes only.

The following applies to drives with 9400 servo controllers:

- They comply with the EC ”Electromagnetic Compatibility” Directive if they are installed according to the guidelines of CE-typical drive systems.
- They can be used for operation at public and non-public mains.
- They can be used in industrial premises as well as residential and commercial premises.
- The user is responsible for the compliance of his application with the EC Directives.

Any other use shall be deemed inappropriate!

Liability

The information, data, and notes in this Hardware Manual met the state of the art at the time of printing. Claims referring to drive systems which have already been supplied cannot be derived from the information, illustrations, and descriptions given in this Manual.

The specifications, processes, and circuitry described in this Hardware Manual are for guidance only and must be adapted to your own application. Lenze does not take any responsibility for the suitability of the process and circuit proposals.

The specifications in this Hardware Manual describe the product features without guaranteeing them.

Lenze does not accept any liability for damage and failures caused by:

- Disregarding the Hardware Manual
- Unauthorised modifications to the controller
- Operating errors
- Improper working on and with the controller

Warranty

See Terms of sale and delivery.

Warranty claims must be made to your Lenze representative immediately after detecting the deficiency or fault.

The warranty is void in all cases where liability claims cannot be made.

1.7 Terms and abbreviations used

Controller	Any frequency inverter, servo inverter, or DC speed controller
Axis, drive	Lenze controller combined with a motor or geared motor and other Lenze drive components
Basic insulation	Insulation for the basic protection against dangerous shock currents
Functional insulation	Insulation for perfect operation
Double insulation	Basic insulation and additional insulation
Reinforced insulation	Standardised insulating system, equivalent protection to double insulation
Cxxxxx/y	Subcode y of code Cxxxx (e.g. C0410/3 = subcode 3 of code C0410)
Xk/y	Terminal y on terminal strip Xk (e.g. X3/28 = terminal 28 on terminal strip X3)
🕮	Cross-reference to a chapter with the corresponding page number
AC	AC current or AC voltage
DC	DC current or DC voltage
U_{LN} [V]	Rated mains voltage
U_{DC} [V]	DC voltage
U_{M} [V]	Output voltage/voltage across the motor terminals
I_{LN} [A]	Rated mains current
I_{aN} [A]	Rated output current
I_{aM} [A]	Maximum output current
I_{PE} [mA]	Discharge current
I_{DC} [A]	Direct current, r.m.s. value from direct current and harmonic currents, for the dimensioning of DC-bus cables and DC-bus fuses
P_{N} [kW]	Rated motor power
P_{V} [W]	Inverter power loss
P_{DC} [kW]	Power on the DC voltage side
S_{N} [kVA]	Apparent output power of controller
M_{N} [Nm]	Rated torque
f_{max} [Hz]	Maximum frequency
L [mH]	Inductance
R [Ω]	Resistance
DIN	Deutsches Institut für Normung

EMC	Electromagnetic compatibility
EN	European standard
IEC	International Electrotechnical Commission
IP	International Protection Code
NEMA	National Electrical Manufacturers Association
VDE	Verband deutscher Elektrotechniker
CE	Communauté Européene
UL	Underwriters Laboratories

2 Safety instructions

2.1 General safety and application notes for Lenze controllers

(in accordance with Low-Voltage Directive 2014/35/EU)

For your pesonal safety

Disregarding the following basic safety measures may lead to severe personal injury and damage to material assets:

- Only use the product as directed.
- Never commission the product in the event of visible damage.
- Never commission the product before assembly has been completed.
- Do not carry out any technical changes on the product.
- Only use the accessories approved for the product.
- Only use original spare parts from Lenze.
- Observe all regulations for the prevention of accidents, directives and laws applicable on site.
- Transport, installation, commissioning and maintenance work must only be carried out by qualified personnel.
  - IEC 364 and CENELEC HD 384 or DIN VDE 0100 and IEC-Report 664 or DIN VDE 0110 and national regulations for the prevention of accidents must be observed.
  - According to the basic safety information, qualified, skilled personnel are persons who are familiar with the assembly, installation, commissioning, and operation of the product and who have the qualifications necessary for their occupation.
- Observe all specifications in this documentation.
  - This is the condition for safe and trouble-free operation and the achievement of the specified product features.
  - The procedural notes and circuit details described in this documentation are only proposals. It's up to the user to check whether they can be transferred to the particular applications. Lenze Automation GmbH does not accept any liability for the suitability of the procedures and circuit proposals described.
- According to their enclosure, Lenze controllers (frequency inverters, servo inverters, DC speed controllers) and their components can carry a voltage, or parts of the controllers can move or rotate during operation. Surfaces can be hot.
  - Non-authorised removal of the required cover, inappropriate use, incorrect installation or operation create the risk of severe injury to persons or damage to material assets.
  - For more information, please see the documentation.
- There is a high amount of energy within the controller. Therefore always wear personal protective equipment (body protection, headgear, eye protection, ear protection, hand guard) when working on the controller when it is live.

Intended use

Drive controllers are components designed for the installation in electrical systems or machinery. They must not be used as household appliances. They are intended exclusively professional and commercial purposes according to EN 61000-3-2.

When controllers are installed into machines, commissioning (i.e. starting of the operation as directed) is prohibited until it is proven that the machine complies with the regulations of the EC Directive 2006/42/EC (Machinery Directive); EN 60204 must be observed.

Commissioning (i.e. starting of the operation as directed) is only allowed when there is compliance with the EMC Directive (2014/30/EU).

The inverters meet the requirements of the Low-Voltage Directive 2014/35/EU. The harmonised standard EN 61800-5-1 applies to the inverters.

The technical data and supply conditions can be obtained from the nameplate and the documentation. They must be strictly observed.

The actuation of the inverters in specific areas in compliance with EN61800-3 (EMC categories) possibly requires the use of filters.
Warning: in residential environments, this product may cause high-frequency interferences which may make the implementation of interference suppression measures necessary.

Transport, storage

Please observe the notes on transport, storage, and appropriate handling.

Observe the climatic conditions according to the technical data.

Installation

The controllers must be installed and cooled according to the instructions given in the corresponding documentation.

The ambient air must not exceed degree of pollution 2 according to EN 61800-5-1.

Ensure proper handling and avoid mechanical stress. Do not bend any components and do not change any insulation distances during transport or handling. Do not touch any electronic components or contacts.

Controllers contain electrostatically sensitive components which can easily be damaged by inappropriate handling. Do not damage or destroy any electrical component since doing so might endanger your health!

Electrical connection

When working on live inverters, observe the applicable national regulations for the prevention of accidents.

Carry out the electrical installation according to the relevant regulations (e. g. cable cross-sections, fusing, connection to the PE conductor). Additional notes are included in the documentation.

This documentation contains information on installation in compliance with EMC (shielding, earthing, filter, and cables). These notes must also be observed for CE-marked controllers. The manufacturer of the system is responsible for compliance with the limit values demanded by EMC legislation. The controllers must be installed in housings (e.g. control cabinets) to meet the limit values for radio interferences valid at the site of installation. The housings must enable an EMC-compliant installation. Observe in particular that e.g. the control cabinet doors have a circumferential metal connection to the housing. Reduce housing openings and cutouts to a minimum.

Lenze controllers may cause a DC current in the PE conductor. If a residual current device (RCD) is used for protection against direct or indirect contact for a controller with three-phase supply, only a residual current device (RCD) of type B is permissible on the supply side of the controller. If the controller has a single-phase supply, a residual current device (RCD) of type A is also permissible. Apart from using a residual current device (RCD), other protective measures can be taken as well, e.g. electrical isolation by double or reinforced insulation or isolation from the supply system by means of a transformer.

Operation

If necessary, systems including controllers must be equipped with additional monitoring and protection devices according to the valid safety regulations (e.g. law on technical equipment, regulations for the prevention of accidents). You are allowed to adapt the controllers to your application. Please observe the corresponding information given in the documentation.

After the controller has been disconnected from the supply voltage, all live components and power terminals must not be touched immediately because capacitors can still be charged. Please observe the corresponding stickers on the controller.

Keep all protective covers and doors closed during operation.

Safety functions

Certain controller versions support safety functions (e.g. ”Safe torque off”, formerly ”Safe standstill”) according to the requirements of the EC Directive 2006/42/EC (Machinery Directive). The notes on the integrated safety system provided in this documentation must be observed.

Maintenance and servicing

The controllers do not require any maintenance if the prescribed conditions of operation are observed.

Waste disposal

Recycle metal and plastic materials. Assembled PCBs must be disposed of professionally.

The product-specific safety and application notes given in these instructions must be observed!

2.2 General safety and application notes for Lenze motors

(according to Low-Voltage Directive 2014/35/EU)

General

Low-voltage machines have dangerous, live and rotating parts as well as possibly hot surfaces.

Synchronous machines induce voltages at open terminals during operation.

All operations serving transport, connection, commissioning and maintenance are to be carried out by skilled, responsible technical personnel (observe EN 50110-1 (VDE 0105-1) and IEC 60364). Improper handling can cause severe injuries or damages.

Lowvoltage machines may only be operated under the conditions that are indicated in the section ”Application as directed”.

The conditions at the place of installation must comply with the data given on the nameplate and in the documentation.

Application as directed

Lowvoltage machines are intended for commercial installations. They comply with the harmonised standards of the series IEC/EN 60034 (VDE 0530). Their use in potentially explosive atmospheres is prohibited unless they are expressly intended for such use (follow additional instructions).

Lowvoltage machines are components for installation into machines as defined in the Machinery Directive 2006/42/EC. Commissioning is prohibited until the conformity of the end product with this directive has been established (follow i. a. EN 60204-1).

Lowvoltage machines with IP23 protection or less are only intended for outdoor use when applying special protective features.

The integrated brakes must not be used as safety brakes. It cannot be ruled out that factors which cannot be influenced, such as oil ingress due to a defective Aside shaft seal, cause a brake torque reduction.

Transport, storage

Damages must be reported immediately upon receipt to the forwarder; if required, commissioning must be excluded. Tighten screwedin ring bolts before transport. They are designed for the weight of the lowvoltage machines, do not apply extra loads. If necessary, use suitable and adequately dimensioned means of transport (e. g. rope guides).

Remove transport locking devices before commissioning. Reuse them for further transport. When storing low-voltage machines, ensure a dry, dustfree and low-vibration ($v_{eff} \leq 0.2$ mm/s) environment (bearing damage while being stored).

Installation

Ensure an even surface, solid foot/flange mounting and exact alignment if a direct clutch is connected. Avoid resonances with the rotational frequency and double mains frequency which may be caused by the assembly. Turn rotor by hand, listen for unusual slipping noises. Check the direction of rotation when the clutch is not active (observe section ”Electrical connection”).

Use appropriate means to mount or remove belt pulleys and clutches (heating) and cover them with a touch guard. Avoid impermissible belt tensions.

The machines are halfkey balanced. The clutch must be halfkey balanced, too. The visible jutting out part of the key must be removed.

If required, provide pipe connections. Designs with shaft end at bottom must be protected with a cover which prevents the ingress of foreign particles into the fan. Free circulation of the cooling air must be ensured. The exhaust air also the exhaust air of other machines next to the drive system must not be taken in immediately.

Electrical connection

All operations must only be carried out by qualified and skilled personnel on the lowvoltage machine at standstill and deenergised and provided with a safe guard to prevent an unintentional restart.This also applies to auxiliary circuits (e. g. brake, encoder, blower).

Check safe isolation from supply!

If the tolerances specified in EN 600341; IEC 34 (VDE 05301) voltage ±5 %, frequency ±2 %, waveform, symmetry are exceeded, more heat will be generated and the electromagnetic compatibility will be affected.

Observe the data on the nameplate, operating notes, and the connection diagram in the terminal box.

The connection must ensure a continuous and safe electrical supply (no loose wire ends); use appropriate cable terminals. The connection to the PE conductor must be safe. The plug-in connectors must be bolt tightly (tostop).

The clearances between blank, live parts and to earth must not fall below 8 mm at $V_{rated} \leq 550$ V, 10 mm at $V_{rated} \leq 725$ V, 14 mm at $V_{rated} \leq 1000$ V.

The terminal box must be free of foreign particles, dirt and moisture. All unused cable entries and the box itself must be sealed against dust and water.

Commissioning and operation

Before commissioning after longer storage periods, measure insulation resistance. In case of values ≤ 1 kΩ per volt of rated voltage, dry winding.

For trial run without output elements, lock the featherkey. Do not deactivate the protective devices, not even in a trial run.

Check the correct operation of the brake before commissioning lowvoltage machines with brakes.

Integrated thermal detectors do not provide full protection for the machine. If necessary, limit the maximum current. Parameterise the controller so that the motor will be switched off with $I > I_{rated}$ after a few seconds of operation, especially at the risk of blocking.

Vibrational severities $v_{eff} \leq 3.5$ mm/s ($P_{rated} \leq 15$ kW) or 4.5 mm/s ($P_{rated} > 15$ kW) are acceptable if the clutch is activated.

If deviations from normal operation occur, e.g. increased temperatures, noises, vibrations, find the cause and, if required, contact the manufacturer. In case of doubt, switch off the lowvoltage machine.

If the machine is exposed to dirt, clean the air paths regularly.

Shaft sealing rings and roller bearings have a limited service life.

Regrease bearings with relubricating devices while the lowvoltage machine is running. Only use the grease recommended by the manufacturer. If the grease drain holes are sealed with a plug, (IP54 drive end; IP23 drive and nondrive end), remove plug before commissioning. Seal bore holes with grease. Replace prelubricated bearings (2Z bearing) after approx. 10,000 h 20,000 h, at the latest however after 3 4 years.

The product-specific safety and application notes given in these instructions must be observed!!

2.3 Residual hazards

Protection of persons

- Before working on the controller, check if no voltage is applied to the power terminals because
  - because the power terminals U, V, W, +UG, -UG, Rb1 and Rb2 carry hazardous voltages for up to 30 minutes after power-off depending on the device.
  - the power terminals L1, L2, L3; U, V, W, +UG, -UG, Rb1 and Rb2 carry hazardous voltages when the motor is stopped.

Device protection

- Plug on or pull off all pluggable terminals only in deenergised condition!
- Detach the controllers only in deenergised conditions from their installation backplanes or the back panel of the control cabinet!
- **Cyclic** switching on and off of the mains voltage can overload and destroy the input current limitation of the controller:
  - Cyclic mains switching of 5-times in 5 minutes is permissible without restrictions.

Motor protection

- Depending on the controller settings, the connected motor can be overheated by:
  - For instance, longer DC-braking operations.
  - Longer operation of self-ventilated motors at low speed.

Protection of the machine/system

- Drives can reach dangerous overspeeds (e.g. setting of high output frequencies in connection with motors and machines unsuitable for such conditions):
  - The controllers do not offer any protection against such operating conditions. Use additional components for this purpose.

3 Single-axis controllers

3.1 Device features

- Space-saving installation by compact design
- Innovative installation concept
- Power range: 370 W to 240 kW
- Pluggable and same connection system for the control cables in the entire power range
- Direct AC mains connection for ”Single Drive” design
- DC link busbar (DC-bus) integrated or can be retrofitted (devices up to 24 A/11 kW)
- Integrated brake chopper
- Direct connection of resolver or encoder feedback
  – Easy connection via predesigned system cable (accessories)
- Integrated phase controller for drift-free standstill
- Field-oriented control for asynchronous and synchronous motors
- Digital synchronisation system via bus system or digital frequency (extension module required)
- User configuration for control functions and input/output signals
  – Comprehensive library with function blocks
  – High flexibility with regard to the adaptation of the internal control structure to the drive task
- Extension interfaces for
  – communication
  – Controller functionality
  – Safety system
- System bus (CANopen)
  – servo inverter connection
  – for extending input and output terminals
  – connecting keypad and display units (HMI)

3.2 Overview of the devices

Note!

For reasons of clarity, device types in this manual are placed together in groups with shared device characteristics. For example:

- ”Devices in the range 2 ... 24 A (0.37 ... 11 kW)” (often from project planner’s viewpoint) or
- ”Device sizes 1, 2 and 3” (often from installation point of view)

The following table gives you an overview of the different device characteristics:

Type	Rated current (rounded)	Motor power (typ.)	Device size (DS)
E94xSxE0024 E94xSxE0034	2 A 3 A	0.37 kW 0.75 kW	1
E94xSxE0044 E94xSxE0074	4 A 7 A	1.5 kW 3.0 kW	2
E94xSxE0134 E94xSxE0174 E94xSxE0244	13 A 17 A 24 A	5.5 kW 7.5 kW 11 kW	3
E94xSxE0324 E94xSxE0474 E94xSxE0594	32 A 47 A 59 A	15 kW 22 kW 30 kW	6
E94xSxE0864 E94xSxE1044	86 A 104 A	45 kW 55 kW	7
E94BSxE1454	145 A	75 kW	81
E94BSxE1724 E94BSxE2024 E94BSxE2454	172 A 202 A 245 A	90 kW 105 kW 130 kW	82
E94BSxE2924	292 A	150 kW	83
E94BSxE3664 E94BSxE4604	366 A 460 A	190 kW 240 kW	91

3.3 General data and operating conditions

General data

Conformity and approval			
Conformity			
CE	2014/35/EU	Low-Voltage Directive	
CE	2014/30/EU	EMC Directive	
EAC	TP TC 004/2011 (TP ZU 004/2011)	Regarding the safety of low-voltage equipment	Eurasian conformity TR ZU: Technical regulation of the tariff union
EAC	TP TC 020/2011 (TP ZU 020/2011)	Electromagnetic compatibility of technical products	Eurasian conformity TR ZU: Technical regulation of the tariff union
Approval			
E94ASxE0024 (0.37 kW) ... E94ASxE1044 (55 kW):			
$_{C}UL_{US}$	UL61800-5-1	Industrial Control Equipment (File No. E132659) for USA	
	CSA C22.2 No. 274-13	Industrial Control Equipment (File No. E132659) for Canada	
E94BSxE1454 (75 kW) ... E94BSxE2924 (150 kW):			
$_{C}UL_{US}$	UL 508C	Industrial Control Equipment (File No. E132659) for USA	
	CSA C22.2 No. 274-13	Industrial Control Equipment (File No. E132659) for Canada	

Protection of persons and device protection			
Type of protection	EN 60529	IP 20	Outside the wire range of the terminals on the motor side
	NEMA 250	Protection against accidental contact in accordance with type 1	
Insulation resistance	EN 61800-5-1	Overvoltage category III from 2000 m amsl: external measures for compliance with the overvoltage category II are required, e.g. ● upstream connection of transformer ● upstream connection of overvoltage protection system	
Control circuit isolation	EN 61800-5-1	up to 2000 m amsl: Safe mains isolation by double/reinforced insulation for mains with neutral earthing with a rated voltage for the external conductor/star point up to 300 V. from 2000 m amsl: If an overvoltage protection system is connected upstream to the device instead of an isolating transformer, additional external measures are required for maintaining the safe isolation.	
Short-circuit strength	EN 61800-5-1	Motor connection: with restrictions, error acknowledgement required Control terminals: full	
Motor - protective measures against		● Short circuit ● Earth fault ● Overvoltage ● motor stalling ● Motor overtemperature (PTC or thermal contact, I^2t monitoring)	
Leakage current	EN 61800-5-1	> 3.5 mA AC, > 10 mA DC	Observe regulations and safety instructions!
Cyclic mains switching		Cyclic mains switching of 5 times in 5 minutes is permissible without restrictions.	

Design		
Housing		
Carrier housing	Device sizes 1, 2 and 3	Glass-fiber reinforced plastic
Carrier housing	Device sizes as of 6	Metal
Dimensions		see "Mechanical installation"
Weight		see "Mechanical installation"

Mounting conditions		
Mounting place		in the control cabinet
Mounting position		vertical
Clearance		
above/beneath		Comply with the device-relating mounting instructions.
at the side		Can be installed in a row without any clearance

Supply conditions "Single Drive"		
AC mains operation		Device size 1 ... 7: Direct connection Device size 81 ... 91: Direct connection via terminals with wire end ferrules; alternatively via ring cable lugs
DC-bus operation		Device size 1 ... 7: Direct connection via terminals or busbar system (retrofittable) Device size 81 ... 91: Direct connection via terminals with wire end ferrules; alternatively via ring cable lugs For more information, please see the chapter DC-bus operation.
Power systems		
TT		Operation allowed without restrictions.
TN		
IT		Up to device size 83: additional measure necessary inside device (see "Earthing of internal EMC filter", 📖 109) device size 91: Specify when ordering
Motors	EN 60034	Only use motors that are suitable for inverter operation. Insulation strength: max. $\hat{u} \geq 1.5$ kV, max. $du/dt \geq 5$ kV/µs

Operating conditions

Environmental conditions		
Climate		
Storage	IEC/EN 60721-3-1	1K3 (-25 ... +60 °C)
Transport	IEC/EN 60721-3-2	Device size 1 ... 6: 2K3 (-25 ... +70 °C)
Operation	IEC/EN 60721-3-3	3K3 (-10 ... +55 °C) Current derating at +45 ... +55 °C: Device size 1 ... 7: 2.5 %/°C Device size 81 ... 91: 1 %/°C
Site altitude		0 ... 4000 m amsl Device size 1 ... 7 with 1000 ... 4000 m amsl: Current derating 5 %/1000 m Device size 81 ... 91 with 1000 ... 4000 m amsl: Current derating 10 %/1000 m
Pollution	EN 61800-5-1	Degree of pollution 2
Vibration resistance (9.81 m/s² = 1 g)		
Transport (only tested for device size 1 ... 7)	IEC/EN 60721-3-2	2M2
	EN 61800-2	2 ... 9 Hz: Amplitude 3.5 mm
		10 ... 200 Hz: acceleration resistant up to 10 m/s²
		200 ... 500 Hz: acceleration resistant up to 15 m/s²
Operation	Germanischer Lloyd	5 ... 13.2 Hz: Amplitude ±1 mm 13.2 ... 100 Hz: acceleration resistant up to 0.7 g Device size 81 ... 83: Mounting must be executed with vibration dampers by the customer. Please consult Lenze. Device size 91: The control cabinet has to be vibration-damped.
	IEC/EN 60068-2-6	10 ... 57 Hz: Amplitude 0.075 mm
		57 ... 150 Hz: Acceleration resistant up to 1 g

Assignment of installation backplane – standard device

Assignment		Device size	Accessories: busbar mounting set/spare fuse
Axis module	Installation backplane		
E94xSxE0024 E94xSxE0034	E94AZPS0034	1	E94AZJA003: 16 A, 700 V DC / EFSAR0016ARHN
E94xSxE0044 E94xSxE0074	E94AZPS0074	2	E94AZJA007: 40 A, 700 V DC / EFSAR0040ARHN
E94xSxE0134 E94xSxE0174 E94xSxE0244	E94AZPS0244	3	E94AZJA024: 100 A, 700 V DC / EFSAR0100ARZN

Motor cable length

Requirements on the motor cable		
Capacitance per unit length		
≤ 2.5 mm²/AWG 14		$C_{Core/core}/C_{Core/shield}$ < 75/150 pF/m
≥ 4 mm²/AWG 12		$C_{Core/core}/C_{Core/shield}$ < 150/300 pF/m
Electric strength		
	VDE 0250-1	$U_0/U_{=}$ 0.6/1.0 kV (U_0 = r.m.s. value external - conductor/PE, U = r.m.s. value - external conductor/external conductor)
	UL	U ≥ 600 V (U = r.m.s. value external conductor/external conductor)

Maximum motor and feedback cable lengths
(for shielded motor cable with rated mains voltage)
If EMC conditions must be met, the permissible cable lengths can be reduced.

Type	Device size	[m]
E94xSxE0024 E94xSxE0034	1	50
E94xSxE0044 E94xSxE0074	2	100
E94xSxE0134 E94xSxE0174 E94xSxE0244	3	100
E94xSxE0324 E94xSxE0474 E94xSxE0594	6	100
E94xSxE0864 E94xSxE1044	7	100
E94BSxE1454	81	150 (100 [1)])
E94BSxE1724 E94BSxE2024 E94BSxE2454	82	150 (100 [1)])
E94BSxE2924	83	150 (100 [1)])
E94BSxE3664 E94BSxE4604	91	150 (100 [1)])

Tab. 3-1

1) If safety functions with SM301/SM302, which require reliable speed and position detection, are used.

Type	Max. shielded motor cable lengths for compliance with the conducted interference emission according to C1/C2		
	with RFI filter	with mains filter	without filter
E94xSxE0024 E94xSxE0034	E94AZRS0044 [1] -/50 m	E94AZMS0034 [3] 25 m/50 m	-/10 m [4]
E94xSxE0044 E94xSxE0074	E94AZRS0104 [1] -/50 m	E94AZMS0094 [3] 25 m/100 m	-/10 m [4]
E94xSxE0134 E94xSxE0174	E94AZRS0294 [1] -/50 m	E94AZMS0184 [3] 25 m/100 m	-/10 m [4]
E94xSxE0244		E94AZMS0314 [3] 25 m/100 m	-/10 m [4]
E94xSxE0324 E94xSxE0474 E94xSxE0594	E94AZRS0544 [2] 50 m/100 m	-	-/50 m [4]
E94xSxE0864 E94xSxE1044	E94AZRS0954 [2] 50 m/100 m	-	-/50 m [4]

Tab. 3-2

EMC limit value class for conducted noise emission in TN/TT systems:
C2 to EN 61800-3 corresponds to class A to EN 55011
C1 to EN 61800-3 corresponds to class B to EN 55011

[1] Universal-current-sensitive earth-leakage circuit breaker 30 mA
If several devices or cable lengths > 50 m are used, it is possible that the circuit breaker will respond, depending on the type of cable and the switching frequency.

[2] Universal-current-sensitive earth-leakage circuit breaker 300 mA
If several devices or cable lengths > 50 m are used, it is possible that the circuit breaker will respond, depending on the type of cable and the switching frequency.

[3] Universal-current-sensitive earth-leakage circuit breaker, cable length ≤ 25 m: 30 mA, cable length > 25 m: 300 mA,
If several devices or cable lengths > 50 m are used, it is possible that the circuit breaker will respond, depending on the type of cable and the switching frequency.

[4] See chapter "Fuses and cable cross-sections", (📖 61).

Type	Max. shielded motor cable lengths for compliance with the conducted interference emission according to C2		
	with RFI filter	with mains filter	without filter
E94BSxE1454	E94AZRS1804 (3F480-180.290EM), 150 m	-	-
E94BSxE1724	E94AZRS1804 (3F480-180.290EM), 150 m	-	-
E94BSxE2024	E94AZRS3004 (3F480-300.290EM), 150 m	-	-
E94BSxE2454	E94AZRS3004 (3F480-300.290EM), 150 m	-	-
E94BSxE2924	E94AZRS3004 (3F480-300.290EM), 150 m	-	-
E94BSxE3664	E94AZRS4154 (3F480-415.290EM), 150 m	-	-
E94BSxE4604	E94AZRS4154 (3F480-415.290EM), 150 m	-	-

Type	Max. shielded motor cable lengths for compliance with the conducted interference emission according to C3		
	with RFI filter	with mains filter	without filter
E94BSxE1454	-	-	150 m
E94BSxE1724	-	-	150 m
E94BSxE2024	-	-	150 m
E94BSxE2454	-	-	150 m
E94BSxE2924	-	-	150 m
E94BSxE3664	-	-	150 m
E94BSxE4604	-	-	150 m

Longer motor cables can be achieved when line filters are used in combination with sinusoidal filters. Further conditions to be observed:

- V/f control mode
- Switching frequency is permanently set (C00018)

Max. motor cable lengths for compliance with the conducted interference emission according to C2 when sinusoidal filters and line filters are used					
Type	RFI filter	Mains filter	Sine filter	shielded unshielded	Switching frequency
E94xSxE0024	-	E94AZMS0034	EZS3-004A200	100 m 300 m	4 kHz or 8 kHz
E94xSxE0034					
E94xSxE0044	-	E94AZMS0094	EZS3-010A200		
E94xSxE0074					
E94xSxE0134	-	E94AZMS0184	EZS3-024A200		
E94xSxE0174					
E94xSxE0244	-	E94AZMS0314	EZS3-037A200		
E94xSxE0324	E94AZRS0544	-	EZS3-048A200	150 m 300 m	4 kHz or 8 kHz
E94xSxE0474			EZS3-061A200		
E94xSxE0594			EZS3-072A200		
E94xSxE0864	E94AZRS0954	-	EZS3-115A200	150 m 300 m	2 kHz or 4 kHz
E94xSxE1044			EZS3-150A200		
E94BSxE1454	E94AZRS1804 3F480-180.290EM	-	EZS3-180A200	150 m - m	2 kHz or 4 kHz
E94BSxE1724	E94AZRS1804 3F480-180.290EM	-	EZS3-250A200		
E94BSxE2024	E94AZRS3004 3F480-300.290EM	-	EZS3-250A200		
E94BSxE2454	E94AZRS3004 3F480-300.290EM	-	EZS3-350A200		
E94BSxE2924	E94AZRS3004 3F480-300.290EM	-	EZS3-350A200		
E94BSxE3664	E94AZRS4154 3F480-415.290EM	-	EZS3-480A200		
E94BSxE4604	E94AZRS4154 3F480-415.290EM	-	EZS3-350A200 (2 in parallel)		

Tab. 3-3

EMC limit classes of the conducted interference emission in TN/TT systems:
C2 according to EN 61800-3, corresponds to class A according to EN 55011

EMC		
Operation on public supply systems	EN 61800-3	The controllers are designed for use in an industrial environment. Operation on public networks requires measures to be taken for limiting the expected emission of radio interferences.
Noise emission, in cables		
Design "Single Drive"	EN 61800-3	see Tab. 3-2 EMC protection requirements
Design "Multi Drive"		Depending on the filter at the central DC supply module.
Noise immunity (to EN 61800-3)		
Electrostatic discharge (ESD)	EN 61000-4-2	8 kV with air discharge, 4 kV with contact discharge against housing
Radio frequency		
Cable-guided	EN 61000-4-6	150 kHz ... 80 MHz, 10 V 80 % AM (1 kHz)
Interference (housing)	EN 61000-4-3	80 MHz ... 1000 MHz, 10 V/m 80 % AM (1 kHz)
Burst		
Power terminals and interfaces	EN 61000-4-4	2 kV/5 kHz
Signal interfaces	EN 61000-4-4	1 kV/5 kHz
Control connections	EN 61000-4-4	2 kV/5 kHz
Surge (surge voltage)		
Power terminals	EN 61000-4-5	1.2/50 µs, 1 kV phase/phase, 2 kV phase/PE

Protective insulation



Danger!

Dangerous electrical voltage

When one common voltage source is used for control voltages in separate potential areas, the protective insulation between the separate potential areas is deactivated.

Possible consequences:

► The specified protective insulations are not complied with.

Protective measures:

► Use independent voltage sources.

The available protective insulation within the controller of the ” 9400 Servo Drives” series in accordance with EN 61800-5-1 is implemented with a rated voltage for the external conductor/star point of up to 300 V for mains with neutral earthing.

The following graphic representation

- shows the arrangement of the terminal strips and the separate potential areas of the controller.
- serves to determine the relevant protective insulation between two terminals in differently insulated separate potential areas.

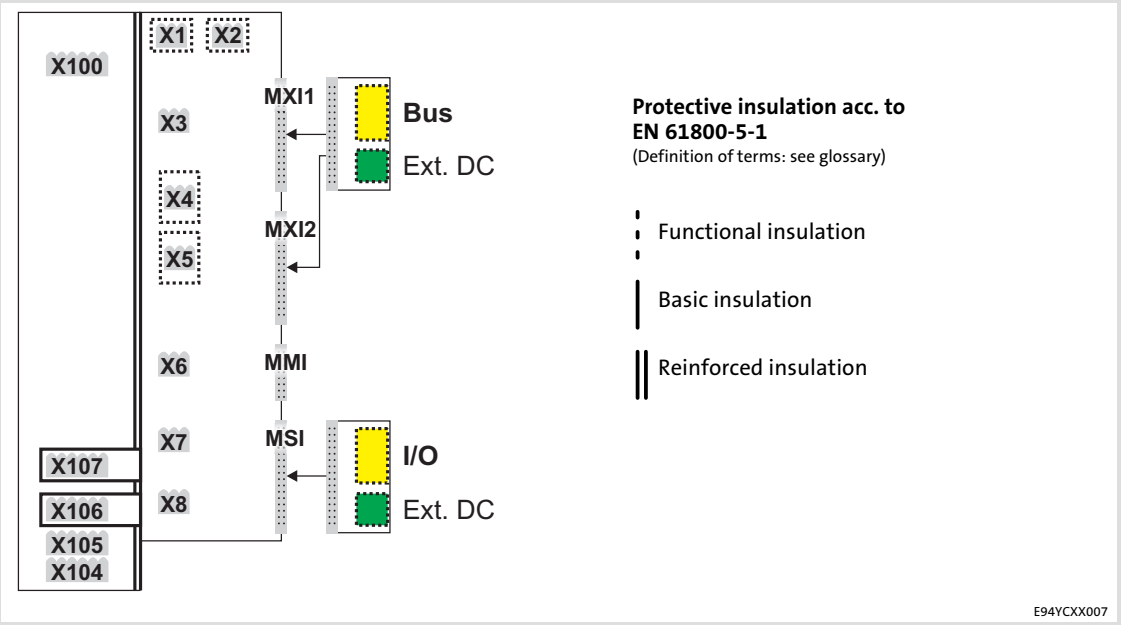

Terminal strip	Connection		Terminal strip	Connection
	Device size 1 ... 7	Device size 81 ... 91		
X100	L1, L2, L3 (only single drive) +UG, -UG	L1, L2, L3	X1	CAN on board 9400
X104	not available	+UG/Rb1, -UG, Rb2	X2	• State bus • 24 V (ext.)
X105	U, V, W Rb1, Rb2 (only single drive)	U, V, W	X3	Analog input/output
X106	Motor PTC	Motor PTC	X4	Digital outputs
X107	Control of motor holding brake	Control of motor holding brake	X5	Digital inputs
			X6	Diagnostics
			X7	Resolvers
			X8	Encoder
			MXI1, MXI2	Extension module
			MMI	Memory module
			MSI	Safety module

Example

Which type of protective insulation is used between the bus terminal of the device module in slot MXI1 or MXI2 and the mains terminal X100?

The separate potential area with the better protective insulation is decisive.

- The separate potential area of the device module bus terminal is ”functionally insulated”.
- The separate potential area of the mains terminal has a ”reinforced insulation”.

Result: The insulation between the mains terminal X100 and the bus terminal is of the ”reinforced insulation” type.

3.4 Rated data

The devices in the power range of 0.37 ... 55 kW (GG 1 ... 7) can be used in the voltage range of 180 ... 528 V AC.

The devices in the power range of 75 ... 240 kW (GG 81 ... 91) can be used in the voltage range of 340 ... 528 V AC.

Note!

To ensure a faultless operation of the devices the code C00173 must be set according to the mains voltage connected.

Emergency operation

Operation of the E94xSxxxx4 devices with an emergency voltage supply at +UG, -UG, is possible from $U_{DC} \geq 260$ V. The settings in C00173 and C00174 are to be adapted accordingly.

3.4.1 Overview

Input data

	Voltage [V AC] [V DC]	Frequency [Hz]	Rated current [A] up to +45 °C ①	Rated current [A] up to +55 °C ①	Number of phases
E94xSxE0024	230/400/480 325/565/675	50/60 -	2.1/2.1/1.8 2.6/2.6/2.3	1.6/1.6/1.4 1.9/1.9/1.7	3 -
E94xSxE0034	230/400/480 325/565/675	50/60 -	3.5/3.5/3.1 4.3/4.3/3.8	2.6/2.6/2.3 3.2/3.2/2.9	3 -
E94xSxE0044	230/400/480 325/565/675	50/60 -	5.5/5.5/4.8 6.7/6.7/5.9	4.1/4.1/3.6 5.0/5.0/4.4	3 -
E94xSxE0074	230/400/480 325/565/675	50/60 -	9.9/9.9/8.6 12.1/12.1/10.6	7.4/7.4/6.5 9.1/9.1/8.0	3 -
E94xSxE0134	230/400/480 325/565/675	50/60 -	16.8/16.8/14.7 20.6/20.6/18.0	12.6/12.6/11.0 15.5/15.5/13.5	3 -
E94xSxE0174	230/400/480 325/565/675	50/60 -	21.0/21.0/18.3 25.7/25.7/22.5	15.8/15.8/13.8 19.3/19.3/16.9	3 -
E94xSxE0244	230/400/480 325/565/675	50/60 -	29.0/29.0/25.4 35.5/35.5/31.1	21.8/21.8/19.1 26.6/26.6/23.3	3 -
E94xSxE0324	230/400/480	50/60	29.0/29.0/26.0	22.0/22.0/20.0	3
E94xSxE0474	230/400/480 325/565/675	50/60 -	43.0/43.0/39.0 71.0/71.0/62.0	32.0/32.0/29.0 53.3/53.3/46.5	3 -
E94xSxE0594	230/400/480 325/565/675	50/60 -	54.0/54.0/47.0 89.0/89.0/77.0	40.5/40.5/35.3 66.8/66.8/57.8	3 -
E94xSxE0864	230/400/480	50/60	79.0/79.0/70.0	59.0/59.0/52.0	3
E94xSxE1044	230/400/480	50/60	95.0/95.0/84.0	71.0/71.0/63.0	3
E94BSxE1454	400/480	50/60	138/138	124/124	3
E94BSxE1724	400/480	50/60	164/164	148/148	3
E94BSxE2024	400/480	50/60	192/192	173/173	3
E94BSxE2454	400/480	50/60	236/236	212/212	3
E94BSxE2924	400/480	50/60	285/285	257/257	3
E94BSxE3664	400/480	50/60	349/349	314/314	3
E94BSxE4604	400/480	50/60	436/436	392/392	3

① Temperature in the control cabinet

Output data

Type	Voltage [V]	Current [A] up to +45 °C ①	Current [A] up to +55 °C ①	Number of phases
E94xSxE0024	0 - 230/400/480	1.5/1.5/1.3	1.1/1.1/1.0	3
E94xSxE0034	0 - 230/400/480	2.5/2.5/2.2	1.9/1.9/1.7	3
E94xSxE0044	0 - 230/400/480	4.0/4.0/3.5	3.0/3.0/2.6	3
E94xSxE0074	0 - 230/400/480	7.0/7.0/6.1	5.3/5.3/4.6	3
E94xSxE0134	0 - 230/400/480	13.0/13.0/11.4	9.8/9.8/8.6	3
E94xSxE0174	0 - 230/400/480	16.5/16.5/14.4	12.4/12.4/10.8	3
E94xSxE0244	0 - 230/400/480	23.5/23.5/20.6	17.6/17.6/15.5	3
E94xSxE0324	0 - 230/400/480	32.0/32.0/28.0	24.0/24.0/21.0	3
E94xSxE0474	0 - 230/400/480	47.0/47.0/42.0	35.3/35.3/30.8	3
E94xSxE0594	0 - 230/400/480	59.0/59.0/52.0	44.3/44.3/38.7	3
E94xSxE0864	0 - 230/400/480	86.0/86.0/76.0	64.5/64.5/56.4	3
E94xSxE1044	0 - 230/400/480	104/104/92.0	78.0/78.0/68.3	3
E94BSxE1454	0 - 400/480	145/145	131/131	3
E94BSxE1724	0 - 400/480	172/172	155/155	3
E94BSxE2024	0 - 400/480	202/202	182/182	3
E94BSxE2454	0 - 400/480	245/245	221/221	3
E94BSxE2924	0 - 400/480	292/292	263/263	3
E94BSxE3664	0 - 400/480	366/366	329/329	3
E94BSxE4604	0 - 400/480	460/460	414/414	3

① Temperature in the control cabinet

Note!

The indicated output voltage will not be reached under certain operating conditions.

- ► Output power in the maximum range
- ► High switching frequencies
- ► Use of mains filters or mains chokes
- ► Mains supply with high impedance (U_k > 5 %)

Power losses

Type	Power loss P_V [W] at a switching frequency of 4 kHz			
	U_{Lr} = 230 V	U_{Lr} = 400 V	U_{LN} = 480 V	when controller is inhibited
E94xSxE0024	70	90	100	40
E94xSxE0034	85	105	120	
E94xSxE0044	100	130	145	
E94xSxE0074	125	160	180	
E94xSxE0134	200	260	290	
E94xSxE0174	240	300	340	
E94xSxE0244	310	400	450	
E94xSxE0324	750	750	750	75
E94xSxE0474	1050	1050	1050	
E94xSxE0594	1100	1100	1100	
E94xSxE0864	1500	1500	1500	100
E94xSxE1044	1800	1800	1800	
E94BSxE1454	-	2100	2100	< 100
E94BSxE1724	-	2200	2200	< 100
E94BSxE2024	-	2600	2600	
E94BSxE2454	-	3300	3300	
E94BSxE2924	-	4100	4100	< 100
E94BSxE3664	-	4900	4900	< 100
E94BSxE4604	-	6200	6200	< 150

3.4.2 Operation at rated mains voltage 230 V

Device size 1 ... 6

Mains	Voltage	Voltage range	Frequency range
	U_{Lrated} [V]	U_{Lrated} [V]	f [Hz]
3/PE AC	230	180 - 0 % ... 264 + 0 %	45 - 0 % ... 65 + 0 %
2/PE DC	325	260 - 0 % ... 370 + 0 %	-

	Mains current at I_{aN}		Output power	Motor power (typical)	
	with external mains choke	without external mains choke	U, V, W	4 pol. ASM	
Type	I_{LN} [A]	I_{LN} [A]	S_{aN} [kVA]	P_{aN} [kW]	P_{aN} [hp]
E94xSxE0024	1.5	2.1	0.5	0.18	0.25
E94xSxE0034	2.5	3.5	0.9	0.37	0.5
E94xSxE0044	3.9	5.5	1.4	0.75	1
E94xSxE0074	7.0	9.9	2.5	1.5	2
E94xSxE0134	12.0	16.8	4.7	3	4
E94xSxE0174	15.0	21.0	5.9	4	5.5
E94xSxE0244	20.5	29.0	8.4	5.5	7.5
E94xSxE0324	-	29.0	11.5	7.5	10
E94xSxE0474	-	43.0	16.9	11	15
E94xSxE0594	-	54.0	21.2	15	20

Device size 7

Mains	Voltage	Voltage range	Frequency range
	U_{Lrated} [V]	U_{Lrated} [V]	f [Hz]
3/PE AC	230	180 - 0 % ... 264 + 0 %	45 - 0 % ... 65 + 0 %

	Mains current at I_{aN}		Output power	Motor power (typical)	
	with external mains choke	without external mains choke	U, V, W	4 pol. ASM	
Type	I_{LN} [A]	I_{LN} [A]	S_{aN} [kVA]	P_{aN} [kW]	P_{aN} [hp]
E94xSxE0864	-	79.0	30.8	22	29
E94xSxE1044	-	95.0	37.3	30	40

Device size 1 ... 91

	Output currents [A] at switching frequency						
	2 kHz		4 kHz		8 kHz		16 kHz
	I_{aN2}	I_{aM2}	I_{aN4}	I_{aM4}	I_{aN8}	I_{aM8}	I_{aN16}
E94xSxE0024	1.9 3)	6.0	1.9 3)	6.0	**1.5**	4.8	1.1
E94xSxE0034	3.1 3)	10.0	3.1 3)	10.0	**2.5**	8.0	1.9
E94xSxE0044	5.0 3)	16.0	5.0 3)	16.0	**4.0**	12.8	3.0
E94xSxE0074	8.8 3)	21.0	8.8 3)	21.0	**7.0**	16.8	5.3
E94xSxE0134	16.3 3)	39.0	16.3 3)	39.0	**13.0**	31.2	9.8
E94xSxE0174	20.6 3)	49.5	20.6 3)	49.5	**16.5**	39.6	12.4
E94xSxE0244	29.4 3)	58.8	29.4 3)	58.8	**23.5**	47.0	17.6
E94xSxE0324	38.4	76.8	38.4	76.8	**32.0**	64.0	16.8
E94xSxE0474	47.0	94.0	**47.0**	94.0	41.0	82.0	21.5
E94xSxE0594	59.0	118	**59.0**	118	41.0	82.0	21.5
E94xSxE0864	86.0	172	**86.0**	172	73.0	146	38.3
E94xSxE1044	104	208	**104**	208	78.0	156	40.9

I_{aN2} Rated value of permanent output current at a frequency of ≥ 0 Hz

I_{aM2} Maximum output current (overload current) at frequency ≥ 0 Hz
- Periodic load change of 0.5 s with I_{aM2} and recovery time of 4.5 s with 75 % I_{aN2}

I_{aN4}, I_{aN8}, I_{aN16} Rated value of continuous output current at a frequency of ≥ 5 Hz (reduce to 0.66 * I_{aNx} for 0 ... 5 Hz)

I_{aM4}, I_{aM8} Maximum output current (overload current) at frequency ≥ 5 Hz (reduce to 0.66 * I_{aMx} for 0 ... 5 Hz)
- Periodic load change of 0.5 s with I_{aMx} and recovery time of 4.5 s with 75 % I_{aNx}
- Can be achieved using the setting "x kHz fixed" in C00018

bold Nominal value I_{aN}

3) Operation with permanent currents > I_{aN8} requires an external mains choke.

4) Depending on the heatsink temperature, the mains voltage and the motor cable length, the switching frequency can be changed even at smaller currents.

Rated data for internal brake chopper

Type	R_{Bmin} [Ω]	I_{BRmax} [A]	P_{BRmax} [kW]	I_{BRd} [A]	P_{Bd} [kW]	t_Z [s]	t_{on} [s]	t_{fp} [s]
E94xSxE0024	47	8.3	3.2	3.7	0.64	150	15	15
E94xSxE0034	47	8.3	3.2	3.7	0.64	150	15	15
E94xSxE0044	27	14.4	5.6	5.9	0.95	150	15	15
E94xSxE0074	27	14.4	5.6	6.9	1.3	150	15	15
E94xSxE0134	18	21.7	8.5	10.6	2.0	150	15	15
E94xSxE0174	9	43.3	16.9	20.3	3.7	150	15	15
E94xSxE0244	9	43.3	16.9	24.5	5.4	150	15	15
E94xSxE0324	9	43.3	16.9	28.5	7.3	600	260	600
E94xSxE0474	7.5	52.0	20.3	37.9	10.8	600	320	600
E94xSxE0594	7.5	52.0	20.3	44.2	14.7	600	430	600
E94xSxE0864	3.8	102.6	40.0	75.5	21.6	600	320	600
E94xSxE1044	3.8	102.6	40.0	83.5	26.4	600	400	600

R_{Bmin}	Minimum brake resistance, nominal value ±10 %
I_{BRmax}	Peak current
P_{BRmax}	Peak braking power
I_{BRd}	Continuous current RMS - important for the dimensioning of the cables
P_{Bd}	Continuous braking power
t_Z	Cycle time, periodic load change with running time and recovery time
t_{on}	Running time
$t_Z - t_{on}$	Recovery time
t_{fp}	Maximum running time without initial load and compliance with the recovery time

Note on the brake chopper data

Due to thermal load, the resistance value changes and therefore the dependent rated data as well.

The brake chopper can output the peak braking power maximally for the specified time t_{on} within a cycle time t_Z.

The brake chopper can output the peak braking power from unloaded states once for the time t_{fp}, e. g. after mains connection or after a recovery time of > 5 x t_Z.

If the times are exceeded, the brake chopper is clocked so that only the continuous braking power is output. This serves to the protection of the brake chopper, however, it does not protect the brake resistor. The brake resistor connected can be protected separately by parameterisation (C00129 ... C00133) or a thermal contact.

Further information can be found in the software manual.

3.4.3 Operation at rated mains voltage 400 V

Device size 1 ... 6

Mains	Voltage	Voltage range	Frequency range
	U_{Lrated} [V]	U_{Lrated} [V]	f [Hz]
3/PE AC	400	320 - 0 % ... 440 + 0 %	45 - 0 % ... 65 + 0 %
2/PE DC	565	455 - 0 % ... 620 + 0 %	-

	Mains current at I_{aN}		Output power	Motor power (typical)	
	with external mains choke	without external mains choke	U, V, W	4 pol. ASM	
Type	I_{LN} [A]	I_{LN} [A]	S_{aN} [kVA]	P_{aN} [kW]	P_{aN} [hp]
E94xSxE0024	1.5	2.1	0.9	0.37	0.5
E94xSxE0034	2.5	3.5	1.6	0.75	1
E94xSxE0044	3.9	5.5	2.5	1.5	2
E94xSxE0074	7.0	9.9	4.4	3	4
E94xSxE0134	12.0	16.8	8.1	5.5	7.5
E94xSxE0174	15.0	21.0	10.3	7.5	11
E94xSxE0244	20.5	29.0	14.7	11	15
E94xSxE0324	-	29.0	20.0	15	20
E94xSxE0474	-	43.0	29.3	22	29
E94xSxE0594	-	54.0	36.8	30	40

Device size 7

Mains	Voltage	Voltage range	Frequency range
	U_{Lrated} [V]	U_{Lrated} [V]	f [Hz]
3/PE AC	400	320 - 0 % ... 440 + 0 %	45 - 0 % ... 65 + 0 %

	Mains current at I_{aN}		Output power	Motor power (typical)	
	with external mains choke	without external mains choke	U, V, W	4 pol. ASM	
Type	I_{LN} [A]	I_{LN} [A]	S_{aN} [kVA]	P_{aN} [kW]	P_{aN} [hp]
E94xSxE0864	-	79.0	53.6	45	60
E94xSxE1044	-	95.0	64.8	55	73

Device size 81 ... 91

Mains	Voltage	Voltage range	Frequency range
	U_{Lrated} [V]	U_{Lrated} [V]	f [Hz]
3/PE AC	400	340 - 0 % ... 440 + 0 %	48 - 0 % ... 65 + 0 %

	Mains current at I_{aN}		Output power	Motor power (typical)	
	with external mains choke	without external mains choke	U, V, W	4 pol. ASM	
Type	I_{LN} [A]	I_{LN} [A]	S_{aN} [kVA]	P_{aN} [kW]	P_{aN} [hp]
E94xSxE1454	-	138	90	75	100
E94xSxE1724	-	164	107	90	125
E94xSxE2024	-	192	126	105	140
E94xSxE2454	-	236	153	130	170
E94xSxE2924	-	285	182	150	205
E94xSxE3664	-	349	228	190	255
E94xSxE4604	-	436	287	240	320

Device size 1 ... 91

	Output currents [A] at switching frequency						
	2 kHz		4 kHz		8 kHz		16 kHz
	I_{aN2}	I_{aM2}	I_{aN4}	I_{aM4}	I_{aN8}	I_{aM8}	I_{aN16}
E94xSxE0024	1.9 [3]	6.0	1.9 [3]	6.0	**1.5**	4.8	1.1
E94xSxE0034	3.1 [3]	10.0	3.1 [3]	10.0	**2.5**	8.0	1.9
E94xSxE0044	5.0 [3]	16.0	5.0 [3]	16.0	**4.0**	12.8	3.0
E94xSxE0074	8.8 [3]	21.0	8.8 [3]	21.0	**7.0**	16.8	5.3
E94xSxE0134	16.3 [3]	39.0	16.3 [3]	39.0	**13.0**	31.2	9.8
E94xSxE0174	20.6 [3]	49.5	20.6 [3]	49.5	**16.5**	39.6	12.4
E94xSxE0244	29.4 [3]	58.8	29.4 [3]	58.8	**23.5**	47.0	17.6
E94xSxE0324	38.4	76.8	38.4	76.8	**32.0**	56.0	16.8
E94xSxE0474	47.0	94.0	**47.0**	94.0	41.0	82.0	21.5
E94xSxE0594	59.0	118	**59.0**	118	41.0	82.0	21.5
E94xSxE0864	86.0	172	**86.0**	172	73.0	146	38.3
E94xSxE1044	104	208	**104**	208	78.0	156	40.9
E94BSxE1454	145	261	**145**	261	102	184	-
E94BSxE1724	172	310	**172**	310	120	216	-
E94BSxE2024	202	364	**202**	364	131	236	-
E94BSxE2454	**245**	441	209	376	160	288	-
E94BSxE2924	**292**	526	250	450	191	344	-
E94BSxE3664	**366**	659	313	563	240	432	-
E94BSxE4604	**460**	828	368	662	260	468	-

I_{aN2} Rated value of continuous output current at a frequency ≥ 0 Hz

I_{aM2} Maximum output current (overload current) at a frequency ≥ 0 Hz

E94xSxE0024 ... E94xSxE1044:
- Periodic load change of 0.5 s with I_{aM2} and recovery time of 4.5 s with 75 % I_{aN2}

E94xSxE1454 ... E94xSxE4604:
- Periodic load change of 10 s with I_{aM2} and recovery time of 50 s with 75 % I_{aN2}

I_{aN4}, I_{aN8}, I_{aN16} Rated value of continuous output current at a frequency ≥ 5 Hz

(reduce to 0.66 * I_{aNx} for 0 ... 5 Hz)

I_{aM4}, I_{aM8} Maximum output current (overload current) at a frequency ≥ 5 Hz

(reduce to 0.66 * I_{aMx} for 0 ... 5 Hz)
- can be achieved using the setting "x kHz fixed" in C00018

E94xSxE0024 ... E94xSxE1044:
- Periodic load change of 0.5 s with I_{aMx} and recovery time of 4.5 s with 75 % I_{aNx}

E94xSxE1454 ... E94xSxE4604:
- Periodic load change of 10 s with I_{aM2} and recovery time of 50 s with 75 % I_{aN2}

bold Rated value I_{aN}

[3] Operation with permanent currents > I_{aN8} requires an external mains choke.

[4] Depending on the heatsink temperature, the mains voltage and the motor cable length, the switching frequency can be changed even at smaller currents.

Operation with increased continuous power

If required, an operation with increased continuous power can be activated for certain inverters at a switching frequency of 2 kHz. This operating mode is only possible under the following conditions:

- Inverter pf E94xSxE1454 ... E94xSxE4604 type, (device size 81 ... 91).
- The mains voltage for "Mode 2" is ≤ 440 V.
- The max. permissible ambient temperature in the control cabinet is ≤ 40 °C.
- Reduce the maximum output current in C00022 according to the following data for I_{aMhc}.
- Activate the operation with increased continuous power in C01199 with "Mode 1" or "Mode 2".
  – To activate it, disable the inverter.

For the currents differing from the standard, refer to the following tables.

Note!

The "activated" setting in C01199 is reset automatically to "deactivated" (without error message) if the previously mentioned conditions are not fulfilled (anymore).

- This, for example, also applies if the memory module is plugged into an inverter of device size 1 ... 6 (device replacement).

For the "Mode 1" selection:

	Output currents [A] at switching frequency			
	2 kHz			
Type	I_{aN2}	I_{aNhc}	I_{aMhc}	I_{aMre}
E94xSxE1454	145	160	218	145
E94xSxE1724	172	195	258	180
E94xSxE2024	202	240	303	226
E94xSxE2454	245	302	368	275
E94xSxE2924	292	361	438	330
E94xSxE3664	366	443	549	415
E94xSxE4604	460	550	690	522

I_{aN2}	Rated value of continuous output current at a frequency ≥ 0 Hz (Standard operation)
I_{aNhc}	increased continuous output current at a frequency ≥ 0 Hz
I_{aMhc}	Maximum output current (overload current) ● Periodic load change of 10 s with I_{aMhc} and recovery time of 50 s with I_{aMre}
I_{aMre}	Maximum output current during a recovery time of 50 s

Sinusoidal filter assignments changed for this operating mode:

Max. motor cable lengths for compliance with the conducted interference emission according to C2 when sinusoidal filters and line filters are used				
Type	Setting C01199	Sine filter	shielded unshielded	Switching frequency
E94BSxE2924	"Mode 1"	**EZS3-480A200**	150 m - m	2 kHz or 4 kHz

For the "Mode 2" selection:

	Output currents [A] at switching frequency			
	2 kHz			
Type	I_{aN2}	I_{aNhc}	I_{aMhc}	I_{aMre}
E94xSxE1454	145	177	195	168
E94xSxE1724	172	212	233	201
E94xSxE2024	202	260	286	247
E94xSxE2454	245	315	347	299
E94xSxE2924	292	395	434	375
E94xSxE3664	366	480	528	456
E94xSxE4604	460	600	660	570

I_{aN2}	Rated value of continuous output current at a frequency ≥ 0 Hz (Standard operation)
I_{aNhc}	Increased continuous output current at a frequency ≥ 0 Hz
I_{aMhc}	Maximum output current (overload current) ● Periodic load change of 60 s with I_{aMhc} and recovery time of 120 s with I_{aMre}
I_{aMre}	Maximum output current during the recovery time

Sinusoidal filter assignments changed for this operating mode:

Max. motor cable lengths for compliance with the conducted interference emission according to C2 when sinusoidal filters and line filters are used				
Type	Setting C01199	Sine filter	shielded unshielded	Switching frequency
E94xSxE2024	"Mode 2"	**EZS3-350A200**	150 m - m	2 kHz or 4 kHz
E94xSxE2924		**EZS3-480A200**		
E94xSxE4604		**EZS3-480A200** (2 in parallel)		

Rated data for internal brake chopper

Type	R_{Bmin} [Ω]	I_{BRmax} [A]	P_{BRmax} [kW]	I_{BRd} [A]	P_{Bd} [kW]	t_Z [s]	t_{on} [s]	t_{fp} [s]
E94xSxE0024	82	8.8	6.4	3.9	1.3	150	15	15
E94xSxE0034	82	8.8	6.4	3.9	1.3	150	15	15
E94xSxE0044	47	15.4	11.2	6.3	1.9	150	15	15
E94xSxE0074	47	15.4	11.2	7.4	2.6	150	15	15
E94xSxE0134	27	26.9	19.5	13.2	4.7	150	15	15
E94xSxE0174	18	40.3	29.2	18.9	6.4	150	15	15
E94xSxE0244	18	40.3	29.2	22.8	9.3	150	15	15
E94xSxE0324	18	40.3	29.2	26.5	12.6	600	260	600
E94xSxE0474	15	48.3	35.0	35.2	18.6	600	320	600
E94xSxE0594	15	48.3	35.0	41.0	25.3	600	430	600
E94xSxE0864	7.5	96.7	70.1	71.1	37.9	600	320	600
E94xSxE1044	7.5	96.7	70.1	78.7	46.3	600	400	600
E94BSxE1454	4.4	165	119	90	35.9	600	300	360
E94BSxE1724	3.1	234	169	128	50.9	600	300	360
E94BSxE2024	3.1	234	169	128	50.9	600	300	360
E94BSxE2454	2.8	259	188	142	56.3	600	300	360
E94BSxE2924	2.3	315	229	173	68.6	600	300	360
E94BSxE3664	1.75	414	300	227	90.1	600	300	360
E94BSxE4604	1.4	518	375	266	99.0	600	300	360

R_{Bmin}	Minimum brake resistance, nominal value ±10 %
I_{BRmax}	Peak current
P_{BRmax}	Peak braking power
I_{BRd}	Continuous current RMS - important for the dimensioning of the cables
P_{Bd}	Continuous braking power
t_Z	Cycle time, periodic load change with running time and recovery time
t_{on}	Running time
$t_Z - t_{on}$	Recovery time
t_{fp}	Maximum running time without initial load and compliance with the recovery time

Note on the brake chopper data

Due to thermal load, the resistance value changes and therefore the dependent rated data as well.

The brake chopper can output the peak braking power maximally for the specified time t_{on} within a cycle time t_Z.

The brake chopper can output the peak braking power from unloaded states once for the time t_{fp}, e. g. after mains connection or after a recovery time of > 5 x t_Z.

If the times are exceeded, the brake chopper is clocked so that only the continuous braking power is output. This serves to the protection of the brake chopper, however, it does not protect the brake resistor. The brake resistor connected can be protected separately by parameterisation (C00129 ... C00133) or a thermal contact.

Further information can be found in the software manual.

3.4.4 Operation with rated mains voltage 480 V

Device size 1 ... 6

Mains	Voltage	Voltage range	Frequency range
	U_{Lrated} [V]	U_{Lrated} [V]	f [Hz]
3/PE AC	480	340 - 0 % ... 528 + 0 %	45 - 0 % ... 65 + 0 %
2/PE DC	675	480 - 0 % ... 746 + 0 %	-

	Mains current at I_{aN}		Output power	Motor power (typical)	
	with external mains choke	without external mains choke	U, V, W	4 pol. ASM	
Type	I_{LN} [A]	I_{LN} [A]	S_{aN} [kVA]	P_{aN} [kW]	P_{aN} [hp]
E94xSxE0024	1.3	1.8	1.0	0.37	0.5
E94xSxE0034	2.2	3.1	1.6	0.75	1
E94xSxE0044	3.4	4.8	2.6	1.5	2
E94xSxE0074	6.1	8.6	4.6	3	4
E94xSxE0134	10.5	14.7	8.5	5.5	7.5
E94xSxE0174	13.1	18.4	10.8	7.5	10
E94xSxE0244	17.9	25.4	15.4	11	15
E94xSxE0324	-	26.0	21.0	15	20
E94xSxE0474	-	39.0	31.4	22	29
E94xSxE0594	-	47.0	38.9	30	40

Device size 7

Mains	Voltage	Voltage range	Frequency range
	U_{Lrated} [V]	U_{Lrated} [V]	f [Hz]
3/PE AC	480	340 - 0 % ... 528 + 0 %	45 - 0 % ... 65 + 0 %

	Mains current at I_{aN}		Output power	Motor power (typical)	
	with external mains choke	without external mains choke	U, V, W	4 pol. ASM	
Type	I_{LN} [A]	I_{LN} [A]	S_{aN} [kVA]	P_{aN} [kW]	P_{aN} [hp]
E94xSxE0864	-	70.0	58.0	45	60
E94xSxE1044	-	84.0	70.0	55	73

Device size 81 ... 91

Mains	Voltage	Voltage range	Frequency range
	U_{Lrated} [V]	U_{Lrated} [V]	f [Hz]
3/PE AC	480	340 - 0 % ... 528 + 0 %	45 - 0 % ... 65 + 0 %

	Mains current at I_{aN}		Output power	Motor power (typical)	
	with external mains choke	without external mains choke	U, V, W	4 pol. ASM	
Type	I_{LN} [A]	I_{LN} [A]	S_{aN} [kVA]	P_{aN} [kW]	P_{aN} [hp]
E94BSxE1454	-	138	108	95	130
E94BSxE1724	-	164	129	110	150
E94BSxE2024	-	192	151	130	180
E94BSxE2454	-	236	183	160	215
E94BSxE2924	-	285	218	190	255
E94BSxE3664	-	349	274	235	320
E94BSxE4604	-	436	344	300	405

Device size 1 ... 91

	Output currents [A] at switching frequency						
	2 kHz		4 kHz		8 kHz		16 kHz
	I_{aN2}	I_{aM2}	I_{aN4}	I_{aM4}	I_{aN8}	I_{aM8}	I_{aN16}
E94xSxE0024	1.9 [3]	6.0	1.9 [3]	6.0	1.3	4.2	1.0
E94xSxE0034	3.1 [3]	10.0	3.1 [3]	10.0	2.2	7.0	1.6
E94xSxE0044	5.0 [3]	16.0	5.0 [3]	16.0	3.5	11.2	2.6
E94xSxE0074	8.8 [3]	21.0	8.8 [3]	21.0	6.1	14.7	4.6
E94xSxE0134	16.3 [3]	39.0	16.3 [3]	39.0	11.4	27.3	8.5
E94xSxE0174	20.6 [3]	49.5	20.6 [3]	49.5	14.4	34.7	10.8
E94xSxE0244	29.4 [3]	58.8	29.4 [3]	58.8	20.6	41.1	15.4 [5]
E94xSxE0324	38.4	76.8	33.6	67.2	28.0	64.0	16.8
E94xSxE0474	47.0	94.0	41.1	82.2	35.8	71.6	21.5
E94xSxE0594	59.0	118	51.6	103	35.9	71.8	21.5
E94xSxE0864	86.0	172	75.3	150	63.9	127	38.3
E94xSxE1044	104	208	91.0	182	68.3	136	40.9
E94BSxE1454	145	261	**145**	261	89	161	-
E94BSxE1724	172	310	**172**	310	105	189	-
E94BSxE2024	202	364	**202**	364	115	206	-
E94BSxE2454	**245**	441	209	376	140	252	-
E94BSxE2924	**292**	526	250	450	167	301	-
E94BSxE3664	**366**	659	313	563	210	378	-
E94BSxE4604	**460**	828	368	662	228	410	-

I_{aN2} Rated value of continuous output current at a frequency ≥ 0 Hz

I_{aM2} Maximum output current (overload current) at a frequency ≥ 0 Hz

E94xSxE0024 ... E94xSxE1044:
- Periodic load change of 0.5 s with I_{aM2} and recovery time of 4.5 s with 75 % I_{aN2}

E94xSxE1454 ... E94xSxE4604:
- Periodic load change of 10 s with I_{aM2} and recovery time of 50 s with 75 % I_{aN2}

I_{aN4}, I_{aN8}, I_{aN16} Rated value of continuous output current at a frequency ≥ 5 Hz

(reduce to 0.66 * I_{aNx} for 0 ... 5 Hz)

I_{aM4}, I_{aM8} Maximum output current (overload current) at a frequency ≥ 5 Hz

(reduce to 0.66 * I_{aMx} for 0 ... 5 Hz)
- can be achieved using the setting "x kHz fixed" in C00018

E94xSxE0024 ... E94xSxE1044:
- Periodic load change of 0.5 s with I_{aMx} and recovery time of 4.5 s with 75 % I_{aNx}

E94xSxE1454 ... E94xSxE4604:
- Periodic load change of 10 s with I_{aM2} and recovery time of 50 s with 75 % I_{aN2}

bold Rated value I_{aN}

3) Operation with permanent currents > I_{aN8} requires an external mains choke.

4) Depending on the heatsink temperature, the mains voltage and the motor cable length, the switching frequency can be changed even at smaller currents.

5) Temperature inside the control cabinet = +35 ... +55 °C: 2.5 %/K current derating

Operation with increased continuous power

If required, operation with increased continuous power can be activated for specific controllers at the switching frequency 2 kHz. This operating mode can only be performed under the following conditions:

- ► Inverters of the types E94BSxE1454 ... E94BSxE4604, (device size 81 ... 91).
- ► The maximum permissible ambient temperature inside the control cabinet is ≤ 40 °C.
- ► The maximum output current in C00022 is to be reduced according to the following data for I_{aMhc}.
- ► Operation with increased continuous power has to be activated in C01199 with "Mode 1".
  – For activation controller inhibit has to be set.

The currents deviating from the standard can be gathered from the following tables.

Note!

The "activated" setting in C01199 is reset to "deactivated" automatically (without error message) if the above-mentioned conditions are not (no longer) met.

► This, for instance, is also the case if the memory module is plugged into a controller of device size 1 ... 6 (device replacement).

For the selection "Mode 1":

	Output currents [A] at switching frequency 2 kHz			
Type	I_{aN2}	I_{aNhc}	I_{aMhc}	I_{aMre}
E94BSxE1454	145	160	218	145
E94BSxE1724	172	195	258	180
E94BSxE2024	202	240	303	226
E94BSxE2454	245	302	368	275
E94BSxE2924	292	361	438	330
E94BSxE3664	366	443	549	415
E94BSxE4604	460	550	690	522

I_{aN2}	Rated value of continuous output current at a frequency of ≥ 0 Hz (standard operation)
I_{aNhc}	Increased continuous output current at a frequency of ≥ 0 Hz
I_{aMhc}	Maximum output current (overload current) ● Periodic load change of 10 s with I_{aMhc} and recovery time of 50 s with I_{aMre}
I_{aMre}	Maximum output current during the recovery time of 50 s

Sinusoidal filter assignments changed for this operating mode:

Max. motor cable lengths for compliance with the conducted interference emission according to C2 when sinusoidal filters and line filters are used				
Type	Setting C01199	Sine filter	shielded unshielded	Switching frequency
E94BSxE2924	”Mode 1”	**EZS3-480A200**	150 m - m	2 kHz or 4 kHz

The selection ”Mode 2“ is only permissible for mains voltages ≤ 440 V.

Rated data for internal brake chopper

Type	R_{Bmin} [Ω]	I_{BRmax} [A]	P_{BRmax} [kW]	I_{BRd} [A]	P_{Bd} [kW]	t_Z [s]	t_{on} [s]	t_{fp} [s]
E94xSxE0024	82	9.3	7.1	4.2	1.4	150	15	15
E94xSxE0034	82	9.3	7.1	4.2	1.4	150	15	15
E94xSxE0044	47	16.3	12.5	6.7	2.1	150	15	15
E94xSxE0074	47	16.3	12.5	7.8	2.9	150	15	15
E94xSxE0134	27	28.3	21.7	13.9	5.2	150	15	15
E94xSxE0174	18	42.5	32.5	19.9	7.2	150	15	15
E94xSxE0244	18	42.5	32.5	24.0	10.4	150	15	15
E94xSxE0324	18.0	42.5	32.5	28.0	14.1	600	260	600
E94xSxE0474	15.0	51.0	39.0	37.1	20.7	600	320	600
E94xSxE0594	15.0	51.0	39.0	43.3	28.2	600	430	600
E94xSxE0864	7.5	102.0	78.0	75.0	42.2	600	320	600
E94xSxE1044	7.5	102.0	78.0	83.0	51.6	600	400	600
E94BSxE1454	4.4	174	133	95	39.9	600	300	360
E94BSxE1724	3.1	247	188	135	56.6	600	300	360
E94BSxE2024	3.1	247	188	135	56.6	600	300	360
E94BSxE2454	2.8	273	209	150	61.7	600	300	360
E94BSxE2924	2.3	333	254	182	76.3	600	300	360
E94BSxE3664	1.75	437	334	239	100	600	300	360
E94BSxE4604	1.4	546	418	280	110	600	300	360

R_{Bmin}	Minimum brake resistance, nominal value ±10 %
I_{BRmax}	Peak current
P_{BRmax}	Peak braking power
I_{BRd}	Continuous current RMS - important for the dimensioning of the cables
P_{Bd}	Continuous braking power
t_Z	Cycle time, periodic load change with running time and recovery time
t_{on}	Running time
$t_Z - t_{on}$	Recovery time
t_{fp}	Maximum running time without initial load and compliance with the recovery time

Note on the brake chopper data

Due to thermal load, the resistance value changes and therefore the dependent rated data as well.

The brake chopper can output the peak braking power maximally for the specified time t_{on} within a cycle time t_Z.

The brake chopper can output the peak braking power from unloaded states once for the time t_{fp}, e. g. after mains connection or after a recovery time of > 5 x t_Z.

If the times are exceeded, the brake chopper is clocked so that only the continuous braking power is output. This serves to the protection of the brake chopper, however, it does not protect the brake resistor. The brake resistor connected can be protected separately by parameterisation (C00129 ... C00133) or a thermal contact.

Further information can be found in the software manual.

3.4.5 Fuses and cable cross-sections

The recommendations for the dimensioning of fuses and cable cross-sections apply to the operation of devices with the assigned typical motor ratings and indicated installation conditions.

In the case of other permissible operating modes, e.g. additional use of reserve power in the interconnected system, the dimensioning of fuses and cables must be adapted to the ratings and currents in accordance with the relevant technical standards.

Mains	Voltage	Voltage range	Frequency range
	U_{Lrated} [V]	U_{Lrated} [V]	f [Hz]
3/PE AC	230 ... 480	180 - 0 % ... 528 + 0 %	45 ... 65

Operation with external mains choke/mains filter, installation according to EN 60204-1

The data are recommendations. Other dimensioning/laying systems are possible (e.g. according VDE 0298-4).

The cable cross-sections apply under the following conditions:

- Use of PVC-insulated copper cables
- Conductor temperature < 70 °C, ambient temperature < 45°C
- No bundling of cables or cores
- Three loaded cores

Type	①	②	L1, L2, L3 - laying system			FI [1)]
			B2	C	F	
	[A]	[A]	[mm²]	[mm²]	[mm²]	[mA]
E94xSxE0024	C10	-	1.5	1.5	-	≥ 300
E94xSxE0034	C10	-	1.5	1.5	-	≥ 300
E94xSxE0044	C10	-	1.5	1.5	-	≥ 300
E94xSxE0074	C16	-	2.5	2.5	-	≥ 300
E94xSxE0134	C20	-	6	2.5	-	≥ 300
E94xSxE0174	C25	-	6	4	-	≥ 300
E94xSxE0244	C40	-	10	10	-	≥ 300

① Circuit breaker
② Fuse of the utilisation category gG/gL or semiconductor fuses or the utilisation category gRL
1) Universal-current-sensitive earth-leakage circuit breaker, RCD type B
If several devices or cable lengths > 50 m are used, it is possible that the circuit breaker will respond, depending on the type of cable and the switching frequency.
Observe national and regional regulations!

Operation with external mains choke/mains filter, installation according to UL

Only use UL-approved cables, fuses and fuse holders.

UL fuse: Voltage 600 V; CC, J or T class fuses

Type	standard installation		motor group installation		FI [1]
	① valeur nominale (max.)	L1, L2, L3	① valeur nominale (max.)	L1, L2, L3	
	[A]	[AWG]	[A]	[AWG]	[mA]
E94xSxE0024	8	14	15	14	≥ 300
E94xSxE0034	10	14	15	14	≥ 300
E94xSxE0044	15	14	20	12	≥ 300
E94xSxE0074	20	12	20	12	≥ 300
E94xSxE0134	45	8	60	6	≥ 300
E94xSxE0174	60	6	60	6	≥ 300
E94xSxE0244	60	6	60	6	≥ 300

① Fuse

1) Universal-current-sensitive earth-leakage circuit breaker, RCD type B
If several devices or cable lengths > 50 m are used, it is possible that the circuit breaker will respond, depending on the type of cable and the switching frequency.

Observe national and regional regulations!

Operation without external mains choke/mains filter, installation according to EN 60204-1

The data are recommendations. Other dimensioning/laying systems are possible (e.g. according VDE 0298-4).

The cable cross-sections apply under the following conditions:

- Use of PVC-insulated copper cables
- Conductor temperature < 70 °C, ambient temperature < 45°C
- No bundling of cables or cores
- Three loaded cores

Type	①	②	L1, L2, L3 - laying system			FI [1]
			B2	C	F	
	[A]	[A]	[mm²]	[mm²]	[mm²]	[mA]
E94xSxE0024	C10	-	1.5	1.5	-	≥ 300
E94xSxE0034	C10	-	1.5	1.5	-	≥ 300
E94xSxE0044	C10	-	1.5	1.5	-	≥ 300
E94xSxE0074	C16	-	2.5	2.5	-	≥ 300
E94xSxE0134	C20	-	6	2.5	-	≥ 300
E94xSxE0174	C25	-	6	4	-	≥ 300
E94xSxE0244	C40	-	10	10	-	≥ 300
E94xSxE0324 [2]	-	50	16	10	-	≥ 300
E94xSxE0474 [2]	-	63	25	16	-	≥ 300
E94xSxE0594 [2]	-	80	25	25	-	≥ 300
E94xSxE0864 [2]	-	100	-	35	-	≥ 300
E94xSxE1044 [2]	-	125	-	50	-	≥ 300
E94BSxE1454 [2]	-	200	-	-	70	≥ 300
E94BSxE1724 [2]	-	250	-	-	95	≥ 300
E94BSxE2024 [2]	-	315	-	-	150	≥ 300
E94BSxE2454 [2]	-	350	-	-	150	≥ 300
E94BSxE2924 [2]	-	400	-	-	185	≥ 300
E94BSxE3664 [2]	-	500	-	-	240	≥ 300
E94BSxE4604 [2]	-	500	-	-	2 x 150	≥ 300

① Circuit breaker
② Fuse of the utilisation category gG/gL or semiconductor fuses or the utilisation category gRL
1) Universal-current-sensitive earth-leakage circuit breaker, RCD type B
If several devices or cable lengths > 50 m are used, it is possible that the circuit breaker will respond, depending on the type of cable and the switching frequency.
2) Device with integrated mains choke
Observe national and regional regulations!

Operation without external mains choke/mains filter, installation according to UL

Only use UL-approved cables, fuses and fuse holders.

UL fuse: Voltage 600 V; CC, J or T class fuses

Type	standard installation		motor group installation		FI [1]
	① valeur nominale (max.)	L1, L2, L3	① valeur nominale (max.)	L1, L2, L3	
	[A]	[AWG]	[A]	[AWG]	[mA]
E94xSxE0024	8	14	15	14	≥ 300
E94xSxE0034	10	14	15	14	≥ 300
E94xSxE0044	15	14	20	12	≥ 300
E94xSxE0074	20	12	20	12	≥ 300
E94xSxE0134	45	8	60	6	≥ 300
E94xSxE0174	60	6	60	6	≥ 300
E94xSxE0244	60	6	60	6	≥ 300
E94xSxE0324 [2]	50	6	125	0	≥ 300
E94xSxE0474 [2]	60	4	125	0	≥ 300
E94xSxE0594 [2]	60	4	125	0	≥ 300
E94xSxE0864 [2]	100	1	300	2 x 2/0 500 mcm [3]	≥ 300
E94xSxE1044 [2]	125	0	300	2 x 2/0 500 mcm [3]	≥ 300
E94BSxE1454 [2]	175 (only J class fuses)	4/0	-	-	≥ 300
E94BSxE1724 [2]	200 (only J class fuses)	300 mcm/ 2x 1/0	-	-	≥ 300
E94BSxE2024 [2]	250 (only J class fuses)	600 mcm/ 2 x 4/0	-	-	≥ 300
E94BSxE2454 [2]	- (in preparation)	600 mcm/ 2 x 4/0	-	-	≥ 300
E94BSxE2924 [2]	- (in preparation)	700 mcm/ 2 x 4/0	-	-	≥ 300
E94BSxE3664 [2]	- 📖 103	2 x 300 mcm	-	-	≥ 300
E94BSxE4604 [2]	- 📖 103	2 x 300 mcm	-	-	≥ 300

① Fuse

1) Universal-current-sensitive earth-leakage circuit breaker, RCD type B
If several devices or cable lengths > 50 m are used, it is possible that the circuit breaker will respond, depending on the type of cable and the switching frequency.

2) Device with integrated mains choke

3) The directive for a "group installation" according to UL508A or NEC, CEC must be considered.

Observe national and regional regulations!

3.4.6 Overcurrent operation

The controllers are designed for two overcurrent modes.

A load period must be followed by a recovery time. During the recovery time the current must not exceed the value given.

The values given refer to the rated output current I_{aN8}.

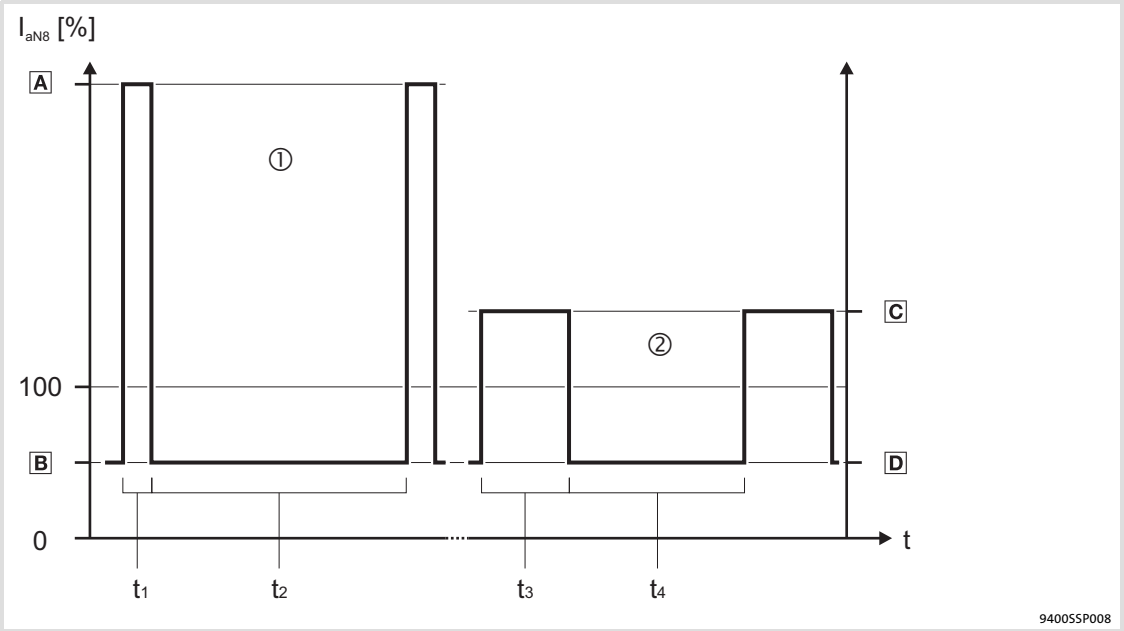

Fig. 3-1 Overcurrent capacity at 45° C

E94xSxE0024 ... E94xSxE1044 E94xMxE0024 ... E94xMxE0594	E94xSxE1454 ... E94xSxE4604
• 5 s cycle ① – t_1 = 0.5 s load time with peak current A – t_2 = 4.5 s recovery time with limited current B	• 1-min cycle ① – t_1 = 10 s load time with peak current A – t_2 = 50 s recovery time with limited current B
• 3-min cycle ② – t_3 = 60 s load time with peak current C – t_4 = 120 s recovery time with limited current D	• 3-min cycle ② – t_3 = 60 s load time with peak current C – t_4 = 120 s recovery time with limited current D

230 V

E94xSxE0024 ... E94xSxE1044:

Type	I [A] in a cycle of 5 seconds ① (📖 65)							
	f = 2 kHz		f = 4 kHz		f = 8 kHz		f = 16 kHz	
	A	B	A	B	A	B	A	B
E94xSxE0024	6.0	1.4	6.0	1.4	4.8	1.1	-	-
E94xSxE0034	10.0	2.3	10.0	2.3	8.0	1.9	-	-
E94xSxE0044	16.0	3.8	16.0	3.8	12.8	3.0	-	-
E94xSxE0074	21.0	6.6	21.0	6.6	16.8	5.3	-	-
E94xSxE0134	39.0	12.2	39.0	12.2	31.2	9.8	-	-
E94xSxE0174	49.5	15.5	49.5	15.5	39.6	12.4	-	-
E94xSxE0244	58.8	22.0	58.8	22.0	47.0	17.6	-	-
E94xSxE0324	76.8	28.8	76.8	28.8	64.0	24.0	-	-
E94xSxE0474	94.0	35.3	94.0	35.3	81.8	30.6	-	-
E94xSxE0594	118	44.3	118	44.3	82.0	30.7	-	-
E94xSxE0864	172	64.5	172	64.5	146	55.0	-	-
E94xSxE1044	208	78.0	208	78.0	156	58.2	-	-

Type	I [A] in a cycle of 3 minute ② (📖 65)							
	f = 2 kHz		f = 4 kHz		f = 8 kHz		f = 16 kHz	
	C	D	C	D	C	D	C	D
E94xSxE0024	2.8	1.4	2.8	1.4	2.3	1.1	-	-
E94xSxE0034	4.7	2.4	4.7	2.4	3.8	1.9	-	-
E94xSxE0044	7.5	3.8	7.5	3.8	6.0	3.0	-	-
E94xSxE0074	13.2	6.6	13.2	6.6	10.5	5.3	-	-
E94xSxE0134	24.4	12.2	24.4	12.2	19.5	9.8	-	-
E94xSxE0174	31.0	15.5	31.0	15.5	24.8	12.4	-	-
E94xSxE0244	44.2	22.1	44.2	22.1	35.3	17.6	-	-
E94xSxE0324	57.6	28.8	57.6	28.8	48.0	24.0	-	-
E94xSxE0474	70.5	35.3	70.5	35.3	61.6	30.6	-	-
E94xSxE0594	88.5	44.3	88.5	44.3	61.4	30.7	-	-
E94xSxE0864	129	64.5	129	64.5	109	55.0	-	-
E94xSxE1044	156	78.0	156	78.0	118	58.2	-	-

400 V

E94xSxE0024 ... E94xSxE1044:

Type	I [A] in a cycle of 5 seconds ① (📖 65)							
	f = 2 kHz		f = 4 kHz		f = 8 kHz		f = 16 kHz	
	A	B	A	B	A	B	A	B
E94xSxE0024	6.0	1.4	6.0	1.4	4.8	1.1	-	-
E94xSxE0034	10.0	2.3	10.0	2.3	8.0	1.9	-	-
E94xSxE0044	16.0	3.8	16.0	3.8	12.8	3.0	-	-
E94xSxE0074	21.0	6.6	21.0	6.6	16.8	5.3	-	-
E94xSxE0134	39.0	12.2	39.0	12.2	31.2	9.8	-	-
E94xSxE0174	49.5	15.5	49.5	15.5	39.6	12.4	-	-
E94xSxE0244	58.8	22.0	58.8	22.0	47.0	17.6	-	-
E94xSxE0324	76.8	28.8	76.8	28.8	64.0	24.0	-	-
E94xSxE0474	94.0	35.3	94.0	35.3	81.8	30.6	-	-
E94xSxE0594	118	44.3	118	44.3	82.0	30.7	-	-
E94xSxE0864	172	64.5	172	64.5	146	55.0	-	-
E94xSxE1044	208	78.0	208	78.0	156	58.2	-	-

Type	I [A] in a cycle of 3 minute ② (📖 65)							
	f = 2 kHz		f = 4 kHz		f = 8 kHz		f = 16 kHz	
	C	D	C	D	C	D	C	D
E94xSxE0024	2.8	1.4	2.8	1.4	2.3	1.1	-	-
E94xSxE0034	4.7	2.4	4.7	2.4	3.8	1.9	-	-
E94xSxE0044	7.5	3.8	7.5	3.8	6.0	3.0	-	-
E94xSxE0074	13.2	6.6	13.2	6.6	10.5	5.3	-	-
E94xSxE0134	24.4	12.2	24.4	12.2	19.5	9.8	-	-
E94xSxE0174	31.0	15.5	31.0	15.5	24.8	12.4	-	-
E94xSxE0244	44.2	22.1	44.2	22.1	35.3	17.6	-	-
E94xSxE0324	57.6	28.8	57.6	28.8	48.0	24.0	-	-
E94xSxE0474	70.5	35.3	70.5	35.3	61.6	30.6	-	-
E94xSxE0594	88.5	44.3	88.5	44.3	61.4	30.7	-	-
E94xSxE0864	129	64.5	129	64.5	109	55.0	-	-
E94xSxE1044	156	78.0	156	78.0	118	58.2	-	-

E94BSxE1454 ... E94BSxE4604:

Type	I [A] in a cycle of 1 minute ① (📖 65)							
	f = 2 kHz		f = 4 kHz		f = 8 kHz		f = 16 kHz	
	A	B	A	B	A	B	A	B
E94BSxE1454	261	109	261	109	196	81.2	-	-
E94BSxE1724	310	129	310	129	232	96.3	-	-
E94BSxE2024	364	152	364	152	273	113	-	-
E94BSxE2454	441	184	377	157	289	120	-	-
E94BSxE2924	526	219	450	187	345	143	-	-
E94BSxE3664	659	275	564	234	432	179	-	-
E94BSxE4604	828	345	662	276	469	193	-	-

Type	I [A] in a cycle of 3 minute ② (📖 65)							
	f = 2 kHz		f = 4 kHz		f = 8 kHz		f = 16 kHz	
	C	D	C	D	C	D	C	D
E94BSxE1454	218	109	218	109	164	81.2	-	-
E94BSxE1724	258	129	258	129	194	96.3	-	-
E94BSxE2024	303	152	303	152	228	113	-	-
E94BSxE2454	368	184	314	157	240	120	-	-
E94BSxE2924	438	219	374	187	286	143	-	-
E94BSxE3664	549	275	468	234	359	179	-	-
E94BSxE4604	690	345	552	276	391	193	-	-

480 V

E94xSxE0024 ... E94xSxE1044:

Type	I [A] in a cycle of 5 seconds ① (📖 65)							
	f = 2 kHz		f = 4 kHz		f = 8 kHz		f = 16 kHz	
	A	B	A	B	A	B	A	B
E94xSxE0024	6.0	1.4	6.0	1.4	4.2	1.0	-	-
E94xSxE0034	10.0	2.3	10.0	2.3	7.0	1.6	-	-
E94xSxE0044	16.0	3.8	16.0	3.8	11.2	2.6	-	-
E94xSxE0074	21.0	6.6	21.0	6.6	14.7	4.6	-	-
E94xSxE0134	39.0	12.2	39.0	12.2	27.3	8.5	-	-
E94xSxE0174	49.5	15.5	49.5	15.5	34.7	10.8	-	-
E94xSxE0244	58.8	22.0	58.8	22.0	41.1	15.4	-	-
E94xSxE0324	76.8	28.8	76.8	28.8	56.0	21.0	-	-
E94xSxE0474	94.0	35.3	94.0	35.3	71.6	26.7	-	-
E94xSxE0594	118	44.3	118	44.3	71.8	26.8	-	-
E94xSxE0864	172	64.5	172	64.5	128	48.2	-	-
E94xSxE1044	208	78.0	208	78.0	137	51.0	-	-

Type	I [A] in a cycle of 3 minute ② (📖 65)							
	f = 2 kHz		f = 4 kHz		f = 8 kHz		f = 16 kHz	
	C	D	C	D	C	D	C	D
E94xSxE0024	2.8	1.4	2.8	1.4	2.0	1.0	-	-
E94xSxE0034	4.7	2.4	4.7	2.4	3.3	1.6	-	-
E94xSxE0044	7.5	3.8	7.5	3.8	5.3	2.6	-	-
E94xSxE0074	13.2	6.6	13.2	6.6	9.2	4.6	-	-
E94xSxE0134	24.4	12.2	24.4	12.2	17.1	8.5	-	-
E94xSxE0174	31.0	15.5	31.0	15.5	21.7	10.8	-	-
E94xSxE0244	44.2	22.1	44.2	22.1	30.8	15.4	-	-
E94xSxE0324	57.6	28.8	57.6	28.8	42.0	21.0	-	-
E94xSxE0474	70.5	35.3	70.5	35.3	53.9	26.7	-	-
E94xSxE0594	88.5	44.3	88.5	44.3	53.7	26.8	-	-
E94xSxE0864	129	64.5	129	64.5	96	48.2	-	-
E94xSxE1044	156	78.0	156	78.0	103	51.0	-	-

E94BSxE1454 ... E94BSxE4604:

Type	I [A] in a cycle of 1 minute ① (📖 65)							
	f = 2 kHz		f = 4 kHz		f = 8 kHz		f = 16 kHz	
	A	B	A	B	A	B	A	B
E94BSxE1454	261	109	261	109	196	81.2	-	-
E94BSxE1724	310	129	310	129	232	96.3	-	-
E94BSxE2024	364	152	364	152	273	113	-	-
E94BSxE2454	441	184	377	157	289	120	-	-
E94BSxE2924	526	219	450	187	345	143	-	-
E94BSxE3664	659	275	564	234	432	179	-	-
E94BSxE4604	828	345	662	276	469	193	-	-

Type	I [A] in a cycle of 3 minute ② (📖 65)							
	f = 2 kHz		f = 4 kHz		f = 8 kHz		f = 16 kHz	
	C	D	C	D	C	D	C	D
E94BSxE1454	218	109	218	109	164	81.2	-	-
E94BSxE1724	258	129	258	129	194	96.3	-	-
E94BSxE2024	303	152	303	152	228	113	-	-
E94BSxE2454	368	184	314	157	240	120	-	-
E94BSxE2924	438	219	374	187	286	143	-	-
E94BSxE3664	549	275	468	234	359	179	-	-
E94BSxE4604	690	345	552	276	391	193	-	-

3.4.7 Current-time diagrams

In addition to the data for overcurrent operation, here you are provided with information on the dimensioning of application-oriented cycles.

By means of the following information you determine permissible load periods with overcurrents and required recovery times with limited currents. If the currents and times determined are observed, the Ixt monitoring function for the protection of the devices will not respond.

Characteristics

The following characteristics (”Current-time diagrams”) describe the device utilisation via amperage and the duration of current flow.
The left part of the diagram (negative time data) represents the overload phase, while the right part of the diagram (positive time data) shows the relieving phase.
Devices with an identical Ixt behaviour are combined within a diagram. A second diagram enlarges a cutout area to improve the clearness of display.

Requirements

- Switching frequency

  The curves shown always refer to the variable rated switching frequency (f_{chopp}) at which the rated device current is permissible permanently. As this rated switching frequencies are different for the individual devices, they are specified with the diagrams. This means that the switching frequency is reduced automatically during the overload phase. During the recovery phase the switching frequency set is maintained.

- Mains voltage

  In the diagrams a mains voltage of U_N = 400 V was assumed. Where applicable, a current derating depending on the mains voltage may be necessary for the devices, depending on the switching frequency that is reached. This means that the currents are weighted differently in the Ixt monitoring. The devices for which a derating is required can be gathered from the ”Rated values” section. The continuous currents specified there then are the 100% values which are required for working with the diagrams.

- Ambient temperature

  The ambient temperature may be maximally T_{Amb} < 45 °C. In the case of higher ambient temperatures the reduced continuous currents have to be taken into consideration.

- Output frequency

  In the diagrams an output frequency (= field frequency) f_{out} > 5 Hz has been assumed. In the case of smaller output frequencies (f_{out} = 0 ... 5 Hz), a different switching frequency results in a different device utilisation due to a different continuous current. When the diagrams were created, this device behaviour was not taken into consideration.
  If a fixed switching frequency f > 4 kHz is selected, the reduction of the permissible continuous current has to be considered (100 % = reduced continuous current) for smaller output frequencies (f_{out} = 0 ... 5 Hz).

Application example

- Drive task
  - A current I_{ol} = 4.0 A is required for a time t_{ol} = 3 s.
  - During the recovery phase there is a current I_{re} = 1.0 A.
  - During the overload phase a switching frequency of 4 kHz is accepted.
  - The switching frequency during the recovery phase is to be 8 kHz.
  - The mains voltage is 400 V.
  - The times with output frequencies under 5 Hz are insignificant.
- Problem
  - How long does the recovery phase t_{re} have to be when the E94AxxE0034 controller is used?
- The currents required are based on the rated device current:
  - I_{ol} = 4.0 A/2.5 A = 160 % - selected characteristic: 175 %
  - I_{re} = 1.0A/2.5 A = 40 % - selected characteristic: 50 %
  - Because of the short overcurrent time t_{ol} = 3 s, the cutout diagram of the E94AxxE0034 device is taken into consideration.
  - The switching frequency f_{chopp} = 8 kHz, var does not have to be considered separately.
- Procedure within the diagram
  - ① Starting from the time axis at t_{ol} = 3 s, a perpendicular line is drawn to the selected characteristic at 175 % (corresponds to the minimum required current I_{ol}).
  - ② Draw a straight line from the point of intersection horizontally to the right to the selected characteristic, the recovery phase, at 50 %.
  - ③ Draw a perpendicular line from the point of intersection back to the time axis.
  - ④ Read the minimum required duration of recovery on the time axis.

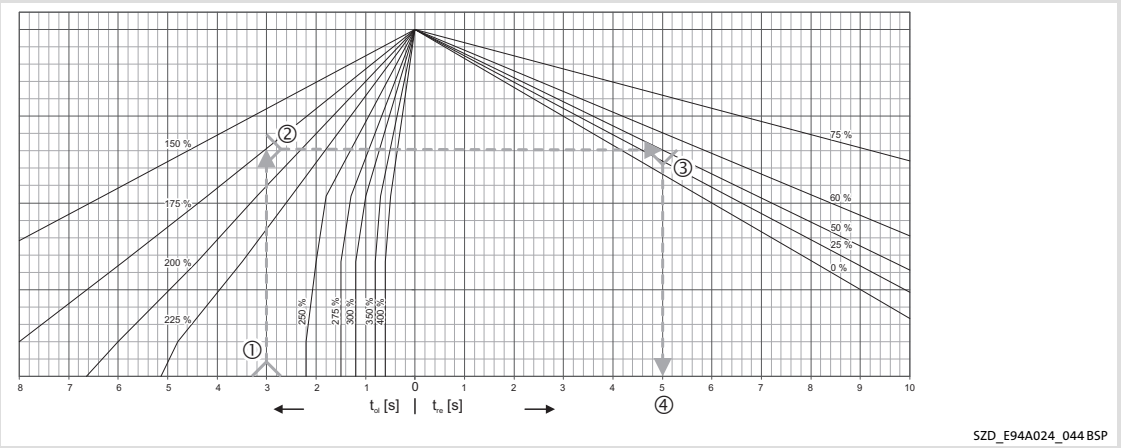

- Result in the example
  - The duration of recovery has to be at least t_{re} = 5 s!

Guide

Type	Diagram
E94xxxE0024	Page 74 Fig. 3-2/ Fig. 3-3
E94xxxE0034	
E94xxxE0044	
E94xxxE0074	Page 75 Fig. 3-4/ Fig. 3-5
E94xxxE0134	
E94xxxE0174	
E94xxxE0244	
E94xMxE0324	
E94xxxE0474	Page 77 Fig. 3-8 / Fig. 3-9
E94xxxE0594	

Guide

Type	Diagram
E94xxxE0024	Page 74 Fig. 3-2/ Fig. 3-3
E94xxxE0034	
E94xxxE0044	
E94xxxE0074	Page 75 Fig. 3-4/ Fig. 3-5
E94xxxE0134	
E94xxxE0174	
E94xxxE0244	
E94xMxE0324	
E94xxxE0474	Page 77 Fig. 3-8 / Fig. 3-9
E94xxxE0594	
E94xSxE0864	Page 78 Fig. 3-10/ Fig. 3-11
E94xSxE1044	
E94BSxE1454	Page 79 Fig. 3-12 / Fig. 3-13
E94BSxE1724	
E94BSxE2024	
E94BSxE2454	
E94BSxE2924	
E94BSxE3664	
E94BSxE4604	

E94xxxE0024 ... E94xxxE0044

Type	U_r	100 %	f_{chopp}
	[V]	[A]	[Setting]
E94xxxE0024	400	1.5	8 kHz var
E94xxxE0034		2.5	
E94xxxE0044		4.0	

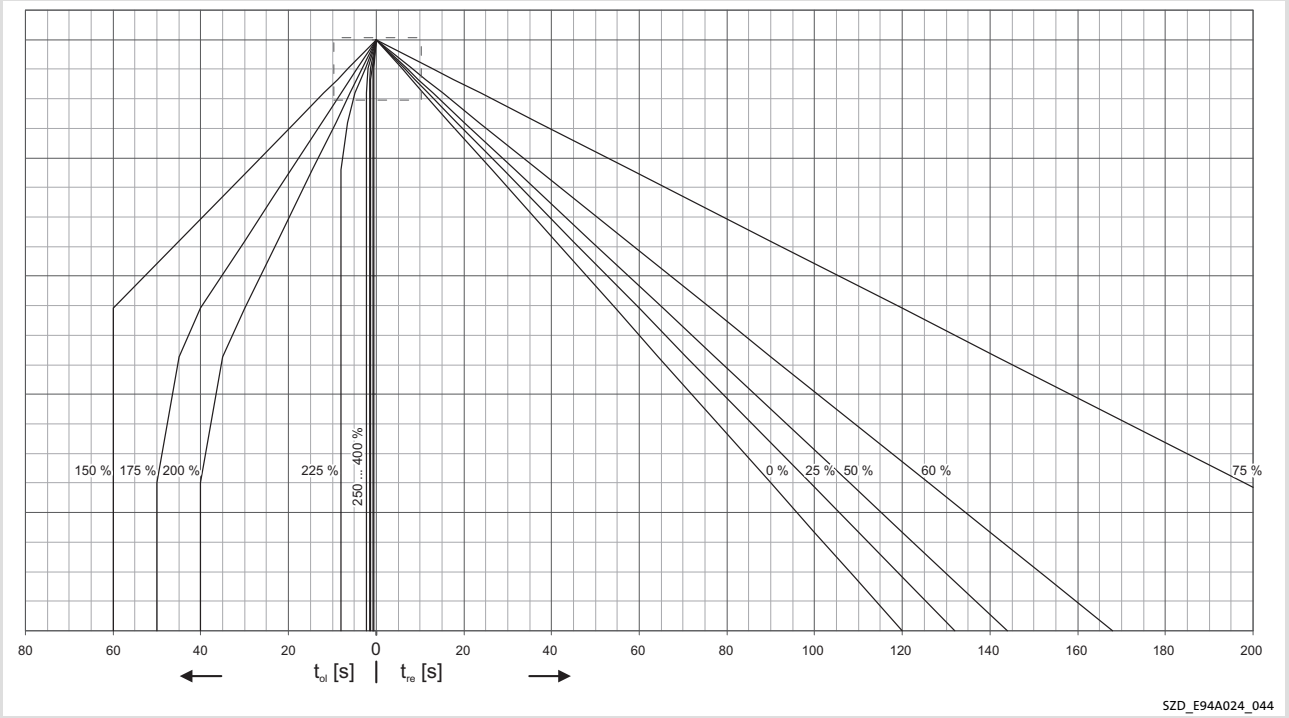

Fig. 3-2 Diagram for E94xxxE0024 and E94xxxE0044

t_{ol} Duration of the load phase
t_{re} Duration of the recovery phase

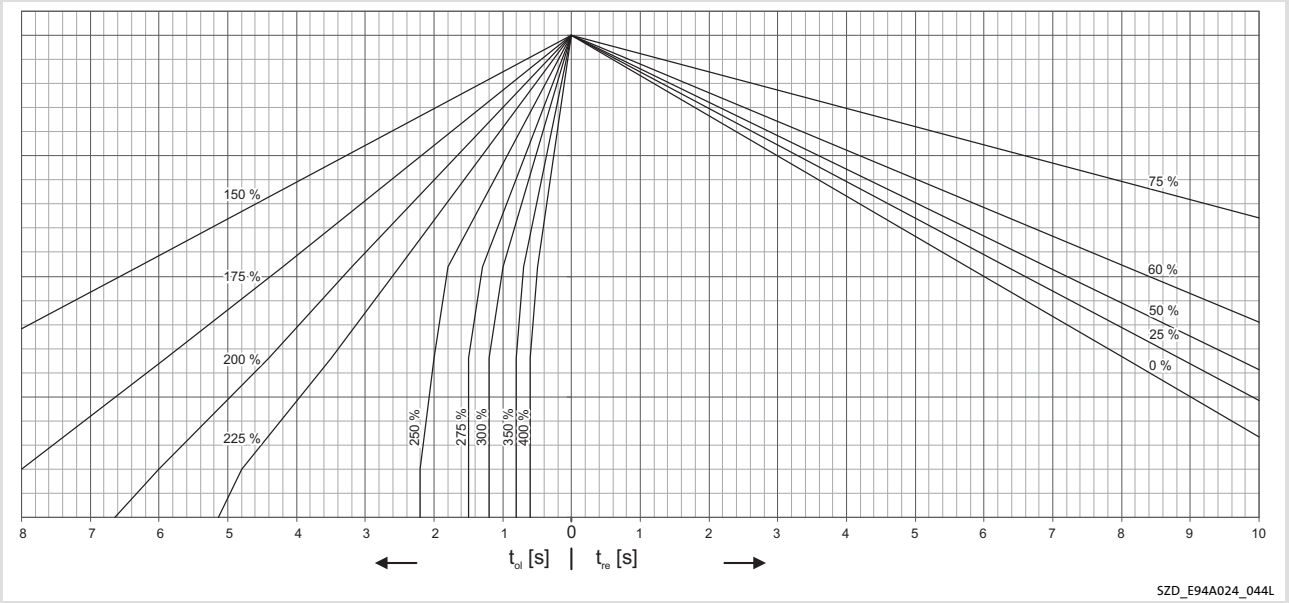

Fig. 3-3 Area cutout for E94xxxE0024 and E94xxxE0044

E94xxxE0074 ... E94xxxE0244 and E94xMxE0324

Type	V_r	100 %	f_{chopp}
	[V]	[A]	[Setting]
E94xxxE0074	400	7.0	8 kHz var
E94xMxE0094		9.3	8 kHz var
E94xxxE0134		13.0	8 kHz var
E94xxxE0174		16.5	
E94xxxE0244		23.5	
E94xMxE0324		32.0	8 kHz var

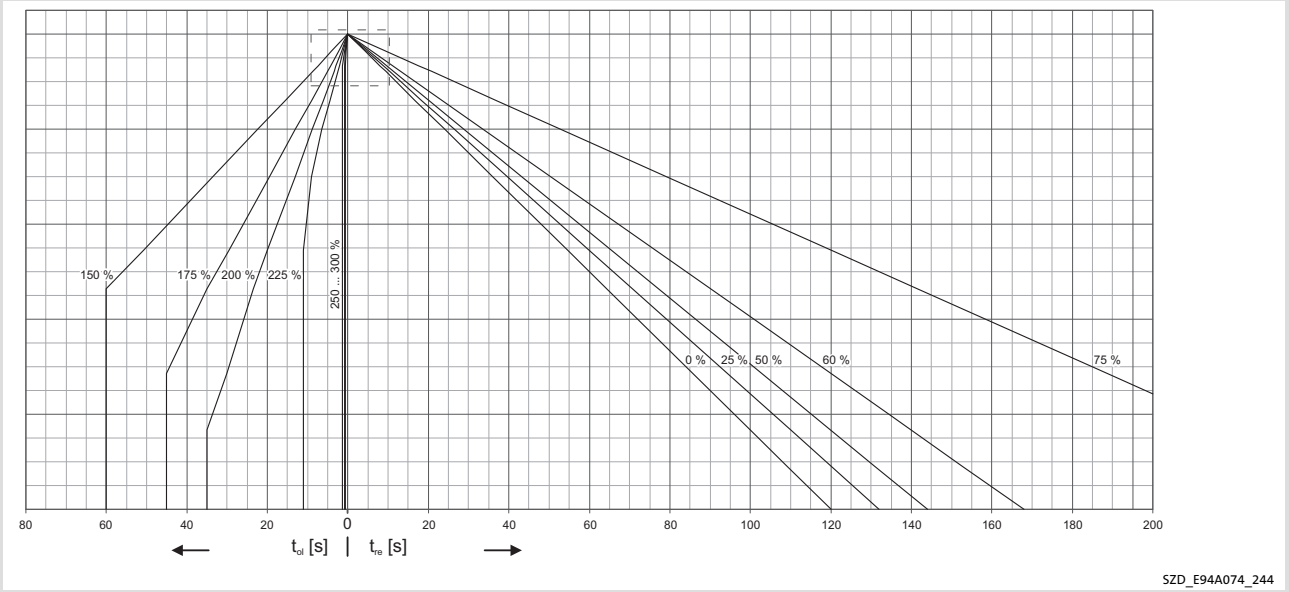

Fig. 3-4 Diagram for E94xxxE0074 ... E94xxxE0244, E94xMxE0324

t_{ol} Duration of the load phase
t_{re} Duration of the recovery phase

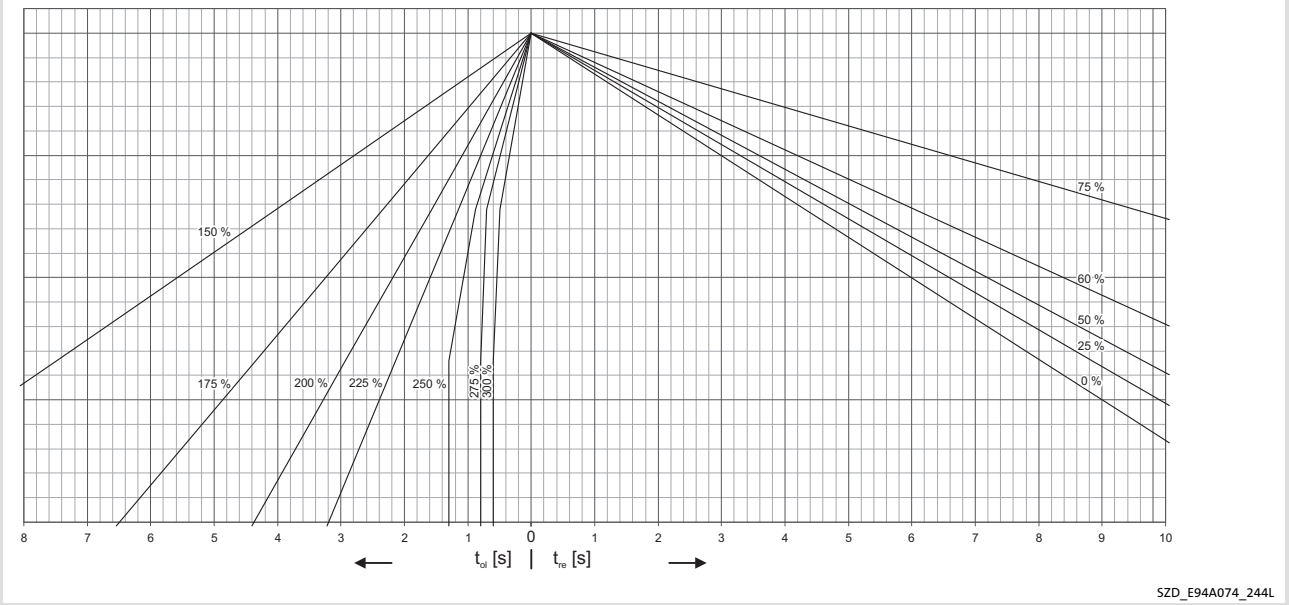

Fig. 3-5 Area cutout for E94xxxE0074 ... E94xxxE0244, E94xMxE0324

E94xxxE0324

Type	U_r	100 %	f_{chopp}
	[V]	[A]	[Setting]
E94xxxE0324	400	32.0	4 kHz var

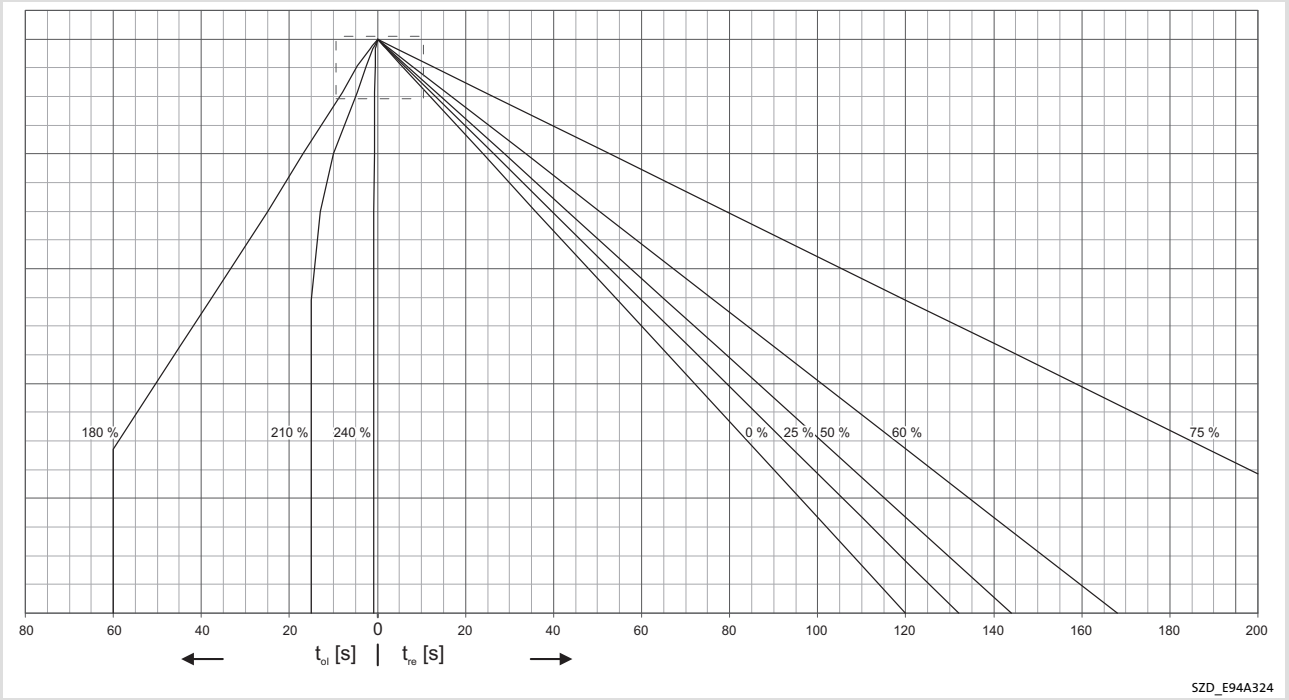

Fig. 3-6 Diagram for E94xxxE0324

t_{ol} Duration of the load phase
t_{re} Duration of the recovery phase

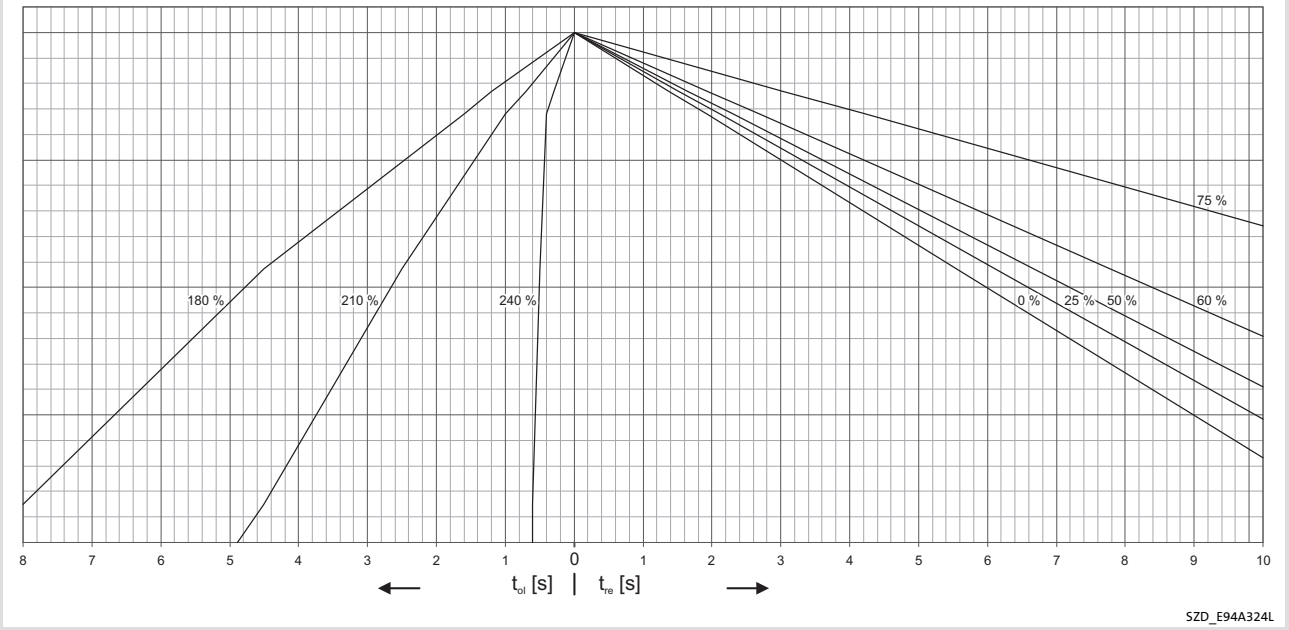

Fig. 3-7 Area cutout for E94xxxE0324

E94xxxE0474 and E94xxxE0594

Type	U_r	100 %	f_{chopp}
	[V]	[A]	[Setting]
E94xxxE0474	400	47.0	4 kHz var
E94xxxE0594		59.0	

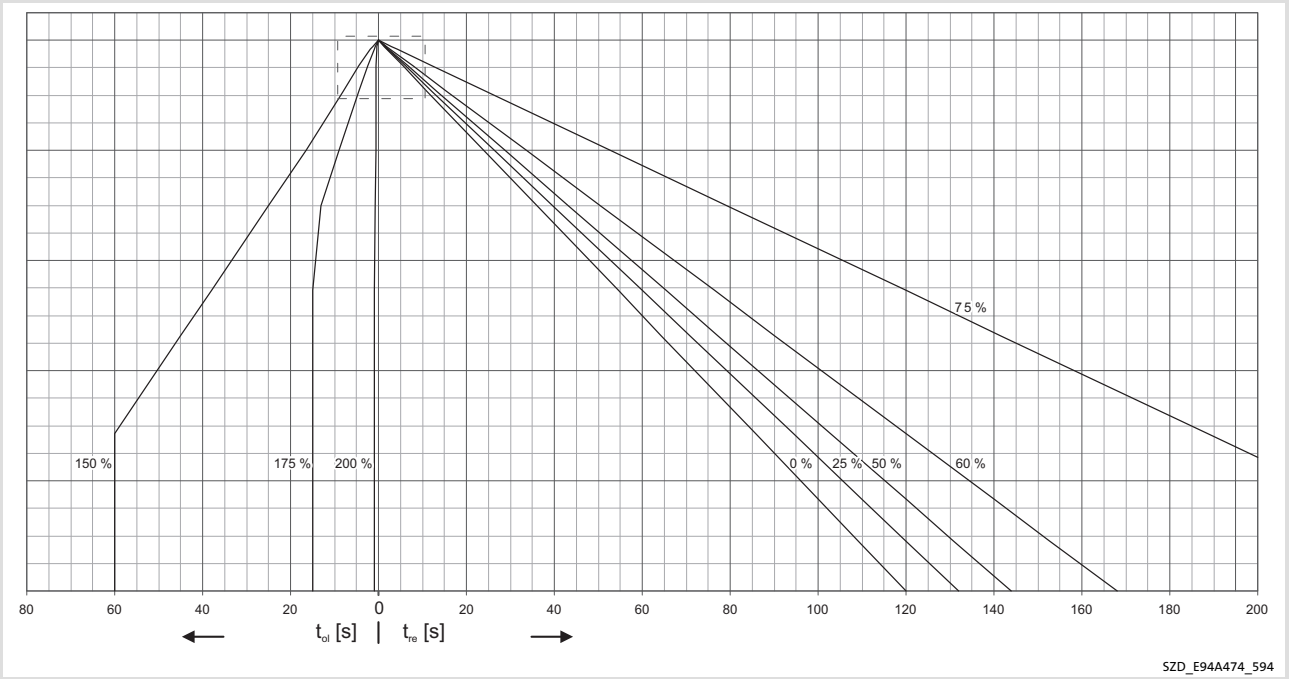

Fig. 3-8 Diagram for E94xxxE0474 and E94xxxE0594

t_{ol} Duration of the load phase
t_{re} Duration of the recovery phase

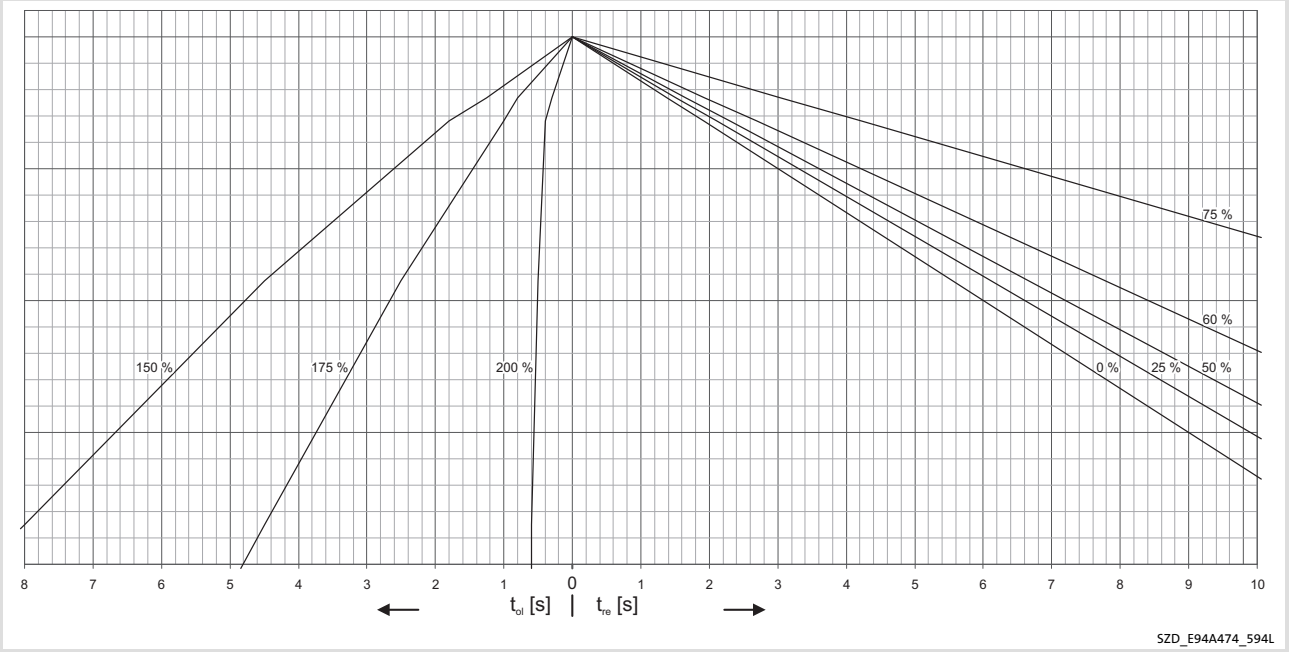

Fig. 3-9 Area cutout for E94xxxE0474 and E94xxxE0594

E94xxxE0864 and E94xxxE1044

Type	U_r	100 %	f_{chopp}
	[V]	[A]	[Setting]
E94xxxE0864	400	86.0	4 kHz var
E94xxxE1044		104	

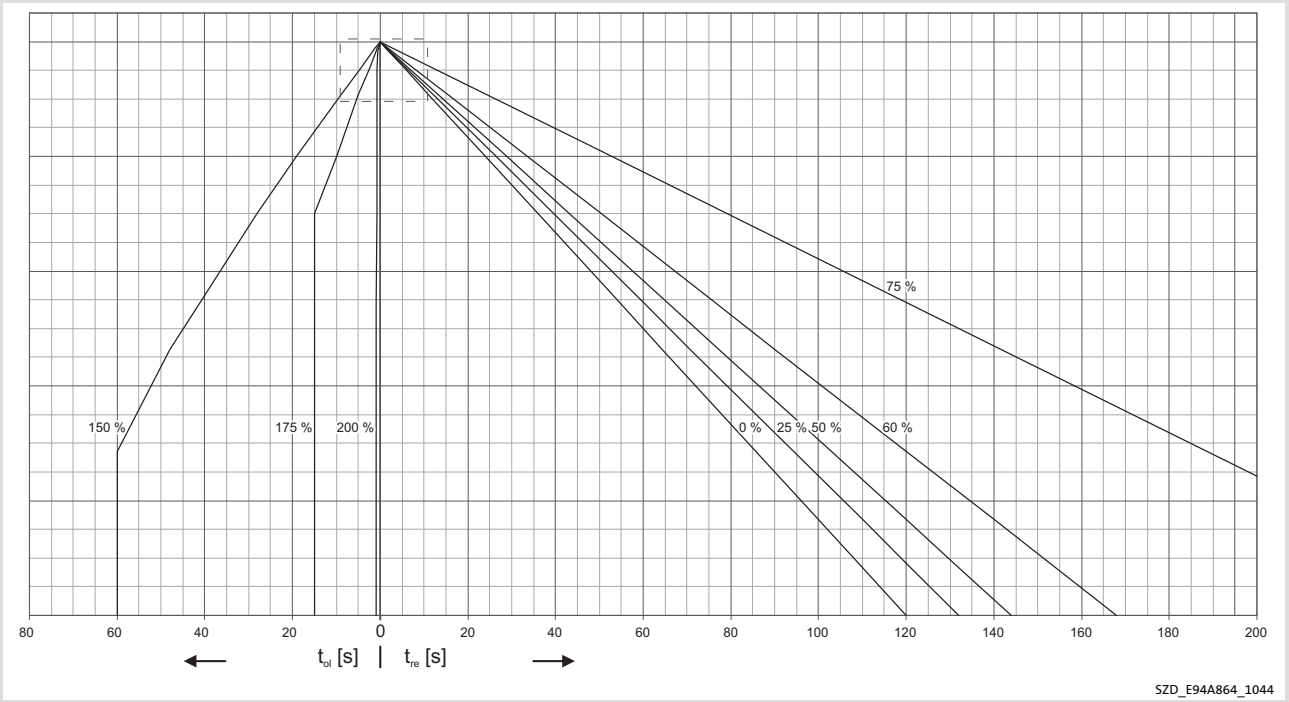

Fig. 3-10 Diagram for E94xxxE0864 and E94xxxE1044

t_{ol} Duration of the load phase
t_{re} Duration of the recovery phase

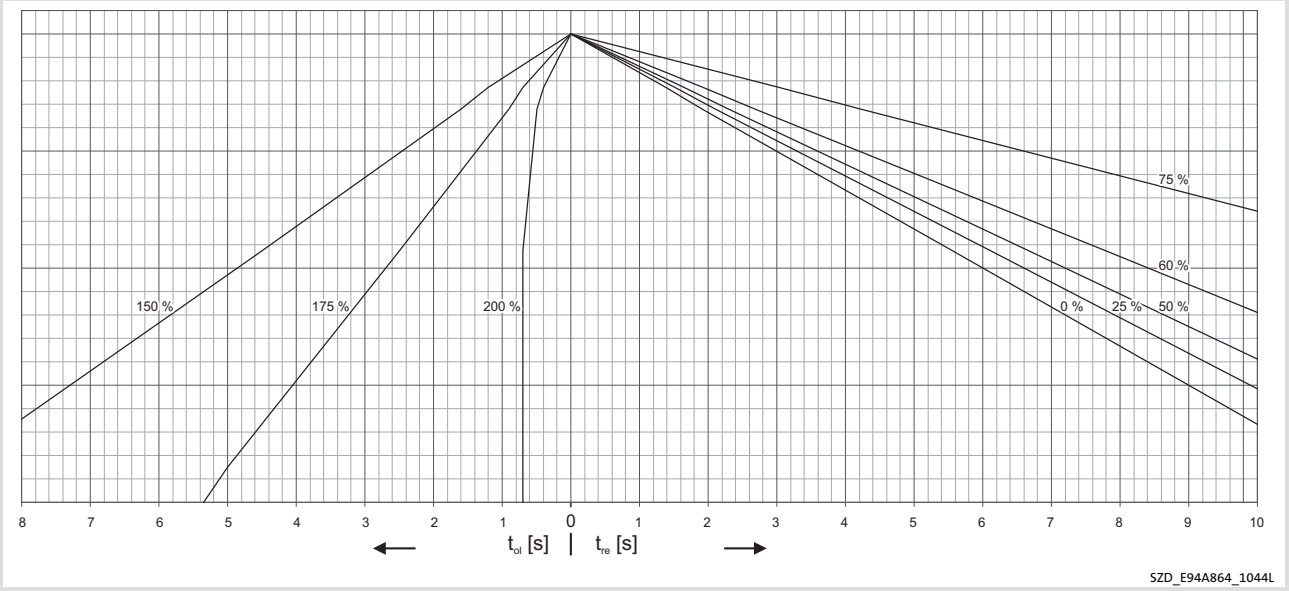

Fig. 3-11 Area cutout for E94xxxE0864 and E94xxxE1044

E94BxxE1454 ... E94BxxE4604

Type	V_r	100 %	f_{chopp}
	[V]	[A]	[Setting]
E94BxxE1454	400	145	4 kHz var
E94BxxE1724		172	
E94BxxE2024		202	
E94BxxE2454	400	245	2 kHz var
E94BxxE2924		292	
E94BxxE3664		366	
E94BxxE4604		460	

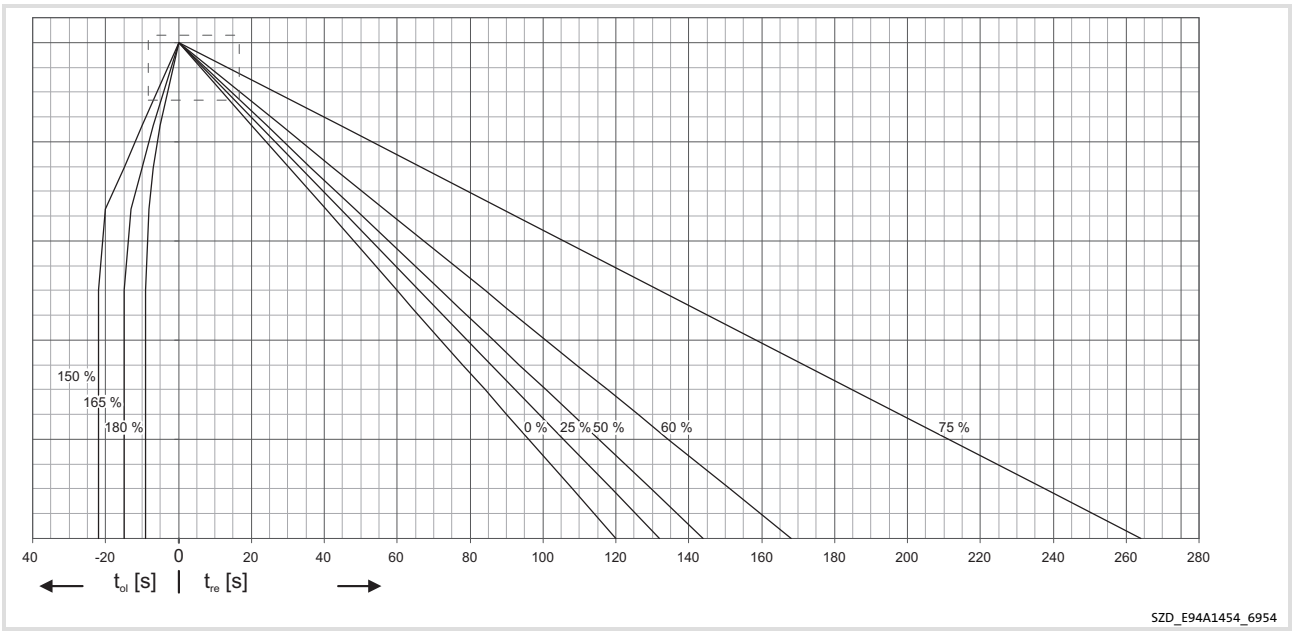

Fig. 3-12 Diagram for E94BxxE1454 ... E94BxxE4604

t_{ol} Duration of the load phase
t_{re} Duration of the recovery phase

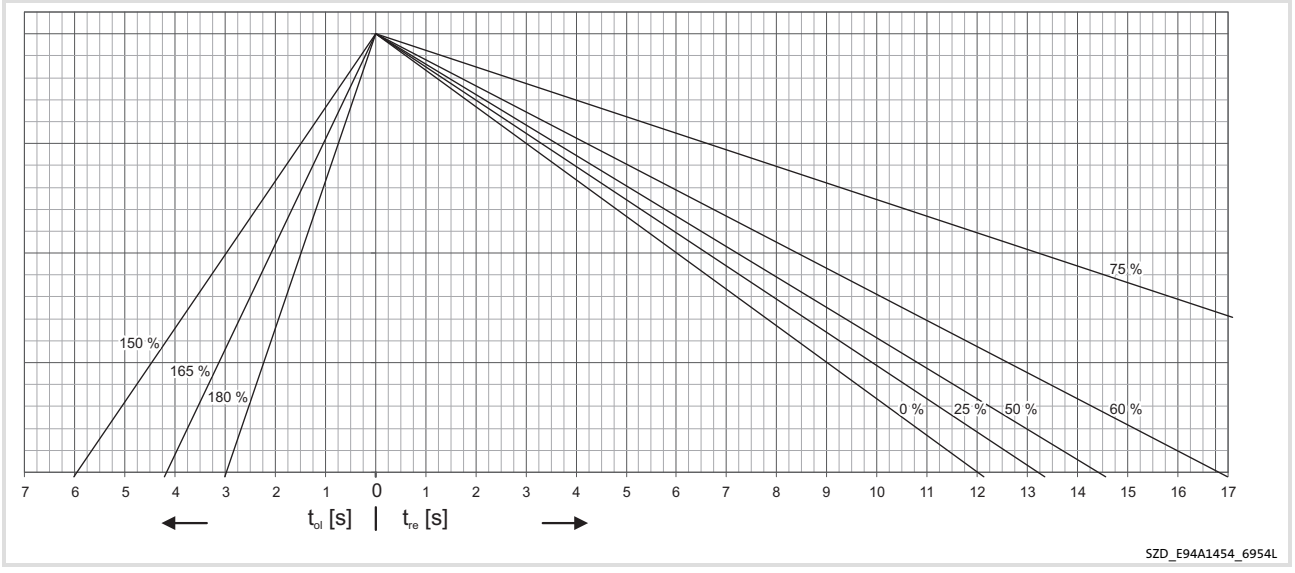

Fig. 3-13 Area section for E94BxxE1454 ... E94BxxE4604

3.5 Device description

3.5.1 Devices in the range 2 ... 24 A (0.37 ... 11 kW)

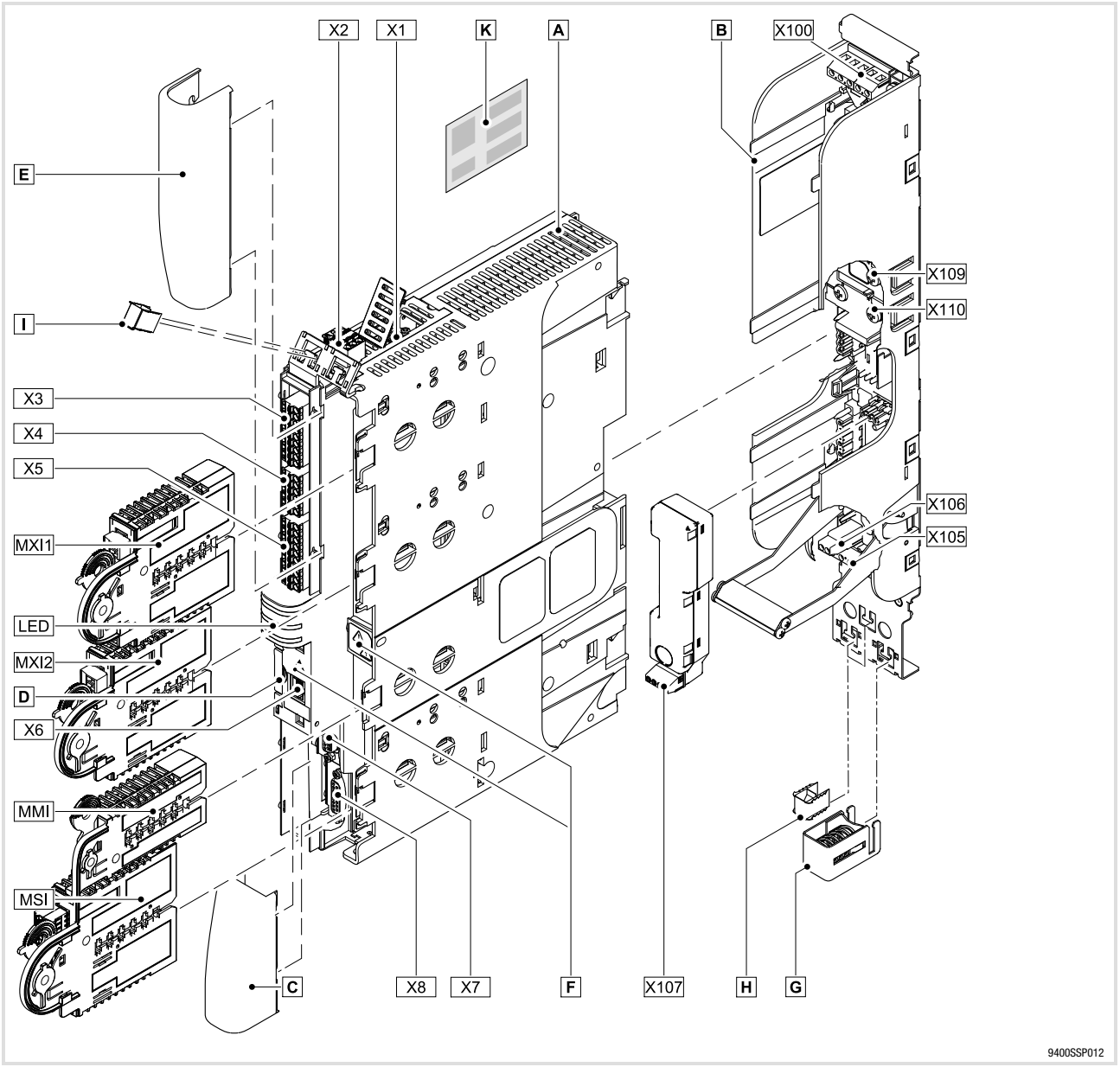

Standard device A	
Pos.	**Description**
MXI1	Module receptacle for extension 1, e.g. communication
MXI2	Module receptacle for extension 2, e.g. communication
MMI	Module receptacle for memory modules
MSI	Module receptacle for safety equipment
X1	System bus (CAN), under the cover
X2	24 V supply and statebus
X3	Analog inputs and analog outputs
X4	Digital outputs
X5	Digital inputs
X6	Diagnostics
X7	Resolver
X8	Encoder
C	Lower cover
D	Retractable nameplate
E	Upper cover
I	EMC clip
K	Prominent warning label close to the device!

The LED display enables fast indication of several operating states.

LED	Labelling	Colour	Description
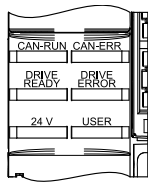 SSP94LED01	CAN-RUN	green	CAN bus ok
	CAN-ERR	red	CAN bus error
	DRIVE READY	green	Standard device is ready for operation
	DRIVE ERROR	red	Error in the standard device or application-induced
	24 V	green	24 V supply voltage ok
	USER	yellow	Message parameterised by the application

Pos.	Symbol	Description
F		**Long discharge time**: All power terminals carry hazardous electrical voltages for a longer period of time after mains disconnection! Depending on the device, this period of time may be up to 30 minutes.
		**High discharge current**: Carry out fixed installation and PE connection according to EN 61800-5-1!
		**Electrostatic sensitive devices**: Before working on the device, the personnel must be free of electrostatic charge!

Installation backplane B	
Pos.	**Description**
X100	Mains / DC-bus voltage
X105	Motor / external brake resistor
X106	Motor temperature monitoring
X107	Control of motor holding brake
X109	DC busbar +
X110	DC busbar -
G	EMC wire clamp (for device sizes 2 + 3), replaces 1 x H
H	EMC shield clamp

3.5.2 Devices in the range 32 ... 104 A (15 ... 55 kW)

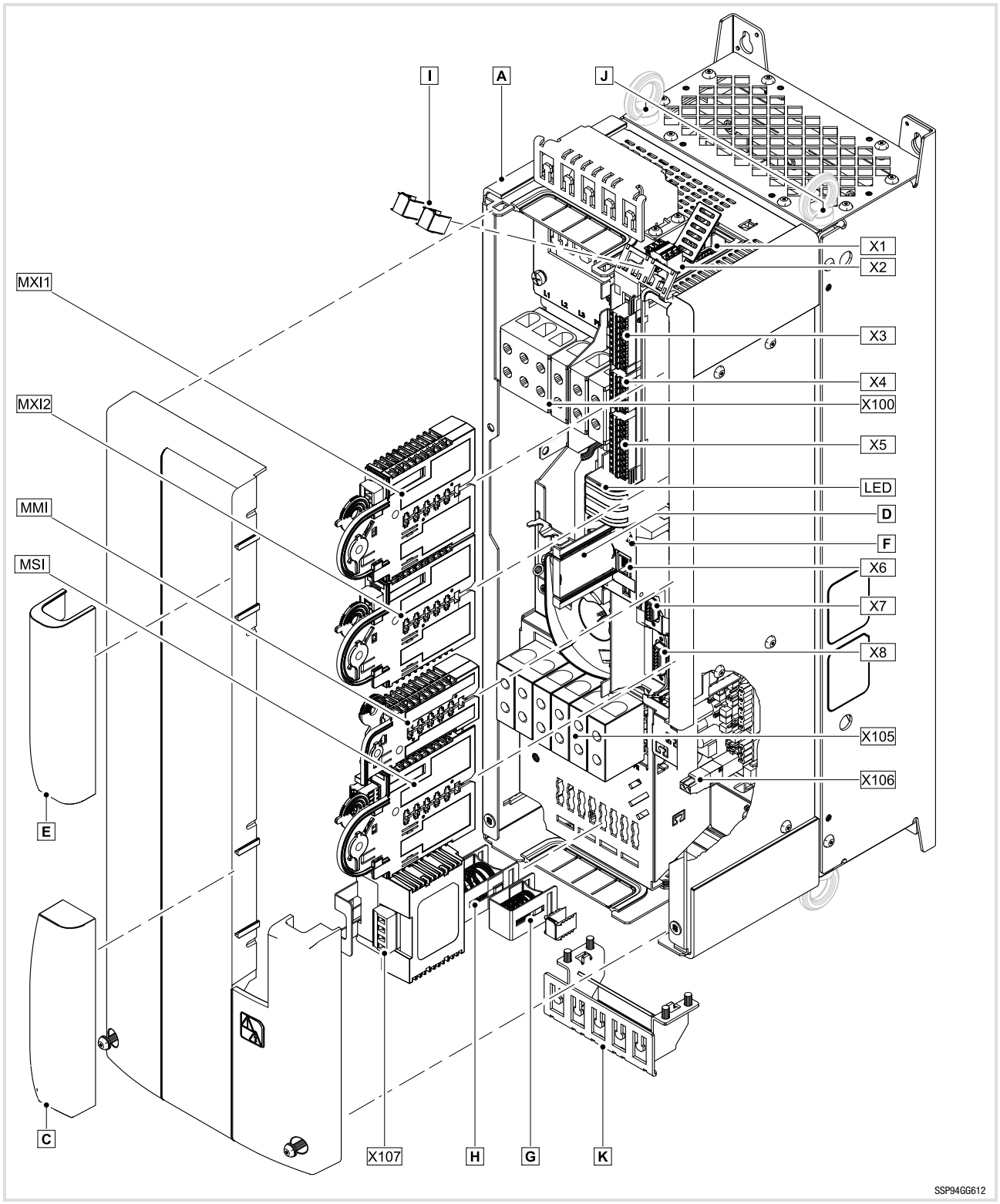

Standard device A	
Pos.	**Description**
MXI1	Module receptacle for extension 1, e.g. communication
MXI2	Module receptacle for extension 2, e.g. communication
MMI	Module receptacle for memory modules
MSI	Module receptacle for safety equipment
X1	System bus (CAN), under the cover
X2	24 V supply and statebus
X3	Analog inputs and analog outputs
X4	Digital outputs
X5	Digital inputs
X6	Diagnostics
X7	Resolver
X8	Encoder
C	Lower cover
D	Retractable nameplate
E	Upper cover
I	EMC clip
K	Prominent warning label close to the device!
X100	Mains / DC-bus voltage
X105	Motor / external brake resistor
X106	Motor temperature monitoring
X107	Control of motor holding brake
G H	EMC wire clamp Device size 6: ∅ 10 ... 20 mm and ∅ 15 ... 28 mm Device size 7: ∅ 15 ... 28 mm and ∅ 20 ... 37 mm
J	Internal thread for M6 eye bolt (not included in the scope of supply)
K	Strain relief and lifting aid, removable

The LED display enables fast indication of several operating states.

LED	Labelling	Colour	Description
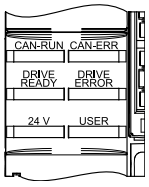 SSP94LED01	CAN-RUN	green	CAN bus ok
	CAN-ERR	red	CAN bus error
	DRIVE READY	green	Standard device is ready for operation
	DRIVE ERROR	red	Error in the standard device or application-induced
	24 V	green	24 V supply voltage ok
	USER	yellow	Message parameterised by the application

Pos.	Symbol	Description
F		**Long discharge time**: All power terminals carry hazardous electrical voltages for a longer period of time after mains disconnection! Depending on the device, this period of time may be up to 30 minutes.
		**High discharge current**: Carry out fixed installation and PE connection according to EN 61800-5-1!
		**Electrostatic sensitive devices**: Before working on the device, the personnel must be free of electrostatic charge!

3.5.3 Devices in the range 145 ... 245 A (75 ... 130 kW)

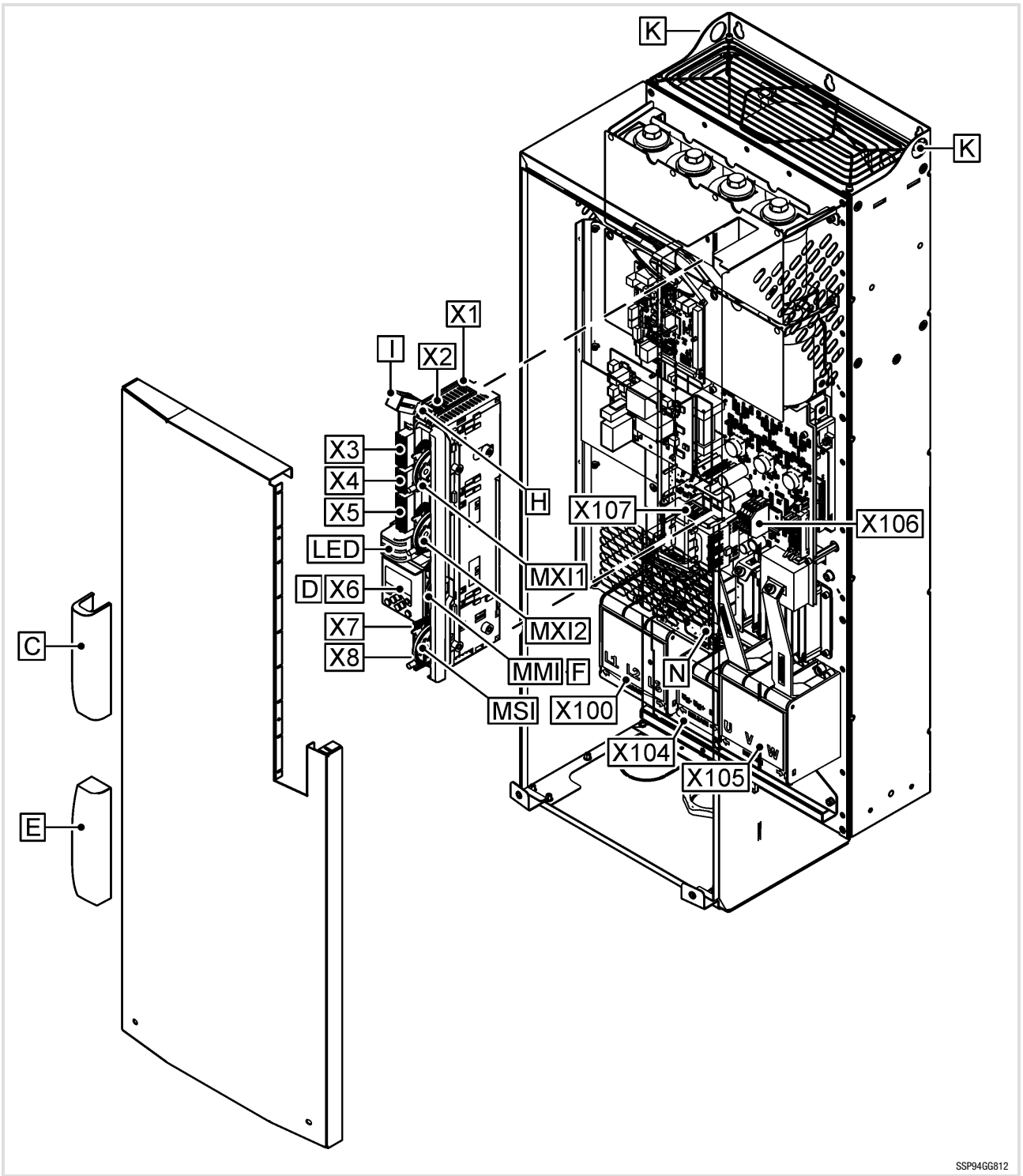

The control unit is firmly connected to the device. For a better presentation, it has been removed.

Pos.	Description
MXI1	Module receptacle for extension 1, e.g. communication
MXI2	Module receptacle for extension 2, e.g. communication
MMI	Module receptacle for memory modules
MSI	Module receptacle for safety equipment
X1	System bus (CAN), under the cover
X2	24-V supply / Statebus
X3	Analog inputs / analog outputs
X4	Digital outputs
X5	Digital inputs
X6	Diagnostics (with diagnostic adapter or keypad)
X7	Resolver
X8	Encoder
C	Lower cover
D	Retractable nameplate
E	Upper cover
I	EMC wire clamp
X100	Mains voltage
X104	DC-bus voltage/external brake resistor
X105	Motor
X106	Motor temperature monitoring (position depends on the device size)
X107	Control of motor holding brake
H	EMC shield clamp
K	Holes for transport and assembly guides
N	Bridge for operation in TT/TN or IT systems

The LED display enables fast indication of several operating states.

LED	Labelling	Colour	Description
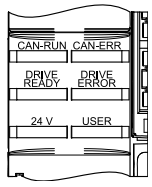 SSP94LED01	CAN-RUN	green	CAN bus ok
	CAN-ERR	red	CAN bus error
	DRIVE READY	green	Standard device is ready for operation
	DRIVE ERROR	red	Error in the standard device or application-induced
	24 V	green	24 V supply voltage ok
	USER	yellow	Message parameterised by the application

Pos.	Symbol	Description
F		**Long discharge time**: All power terminals carry hazardous electrical voltages for a longer period of time after mains disconnection! Depending on the device, this period of time may be up to 30 minutes.
		**High discharge current**: Carry out fixed installation and PE connection according to EN 61800-5-1!
		**Electrostatic sensitive devices**: Before working on the device, the personnel must be free of electrostatic charge!

3.5.4 Device 292 A (150 kW)

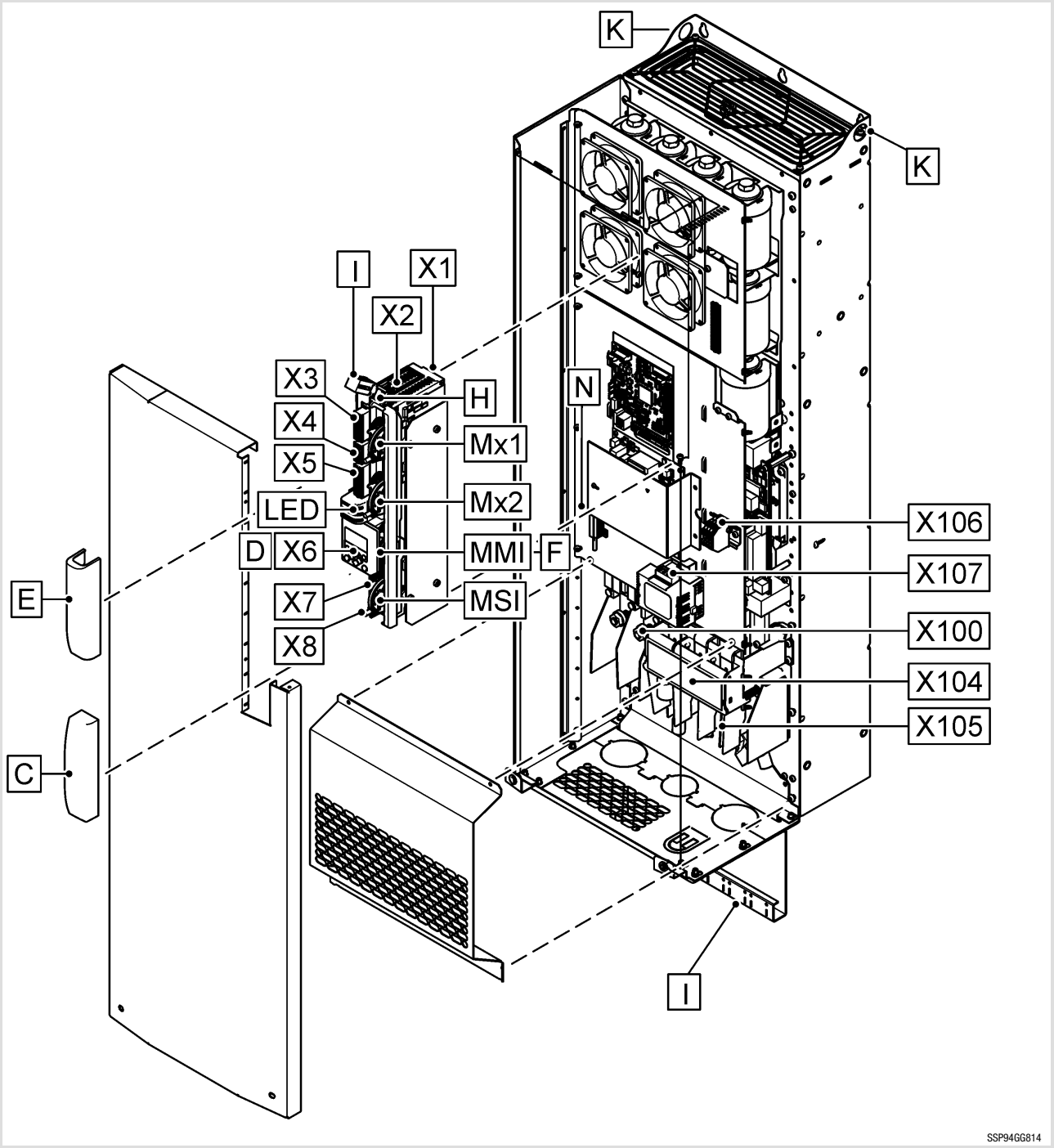

The control unit is firmly connected to the device. For a better presentation, it has been removed.

Pos.	Description
MXI1	Module receptacle for extension 1, e.g. communication
MXI2	Module receptacle for extension 2, e.g. communication
MMI	Module receptacle for memory modules
MSI	Module receptacle for safety equipment
X1	System bus (CAN), under the cover
X2	24-V supply / Statebus
X3	Analog inputs / analog outputs
X4	Digital outputs
X5	Digital inputs
X6	Diagnostics (with diagnostic adapter or keypad)
X7	Resolver
X8	Encoder
C	Lower cover
D	Retractable nameplate
E	Upper cover
I	EMC wire clamp
X100	Mains voltage
X104	DC-bus voltage/external brake resistor
X105	Motor
X106	Motor temperature monitoring (position depends on the device size)
X107	Control of motor holding brake
H	EMC shield clamp
K	Holes for transport and assembly guides
N	Bridge for operation in TT/TN or IT systems

The LED display enables fast indication of several operating states.

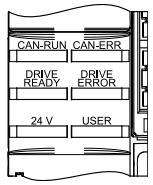

SSP94LED01

LED	Labelling	Colour	Description
	CAN-RUN	green	CAN bus ok
	CAN-ERR	red	CAN bus error
	DRIVE READY	green	Standard device is ready for operation
	DRIVE ERROR	red	Error in the standard device or application-induced
	24 V	green	24 V supply voltage ok
	USER	yellow	Message parameterised by the application

Pos.	Symbol	Description
F		**Long discharge time**: All power terminals carry hazardous voltages for at least 20 minutes after mains disconnection!
		High discharge current: Fixed installation and PE connection to EN 61800-5-1 required!
		Electrostatic sensitive devices: Before working on the device, the personnel must remove any electrostatic charges using suitable measures!

3.5.5 Devices in the range 366 ... 460 A (190 ... 240 kW)

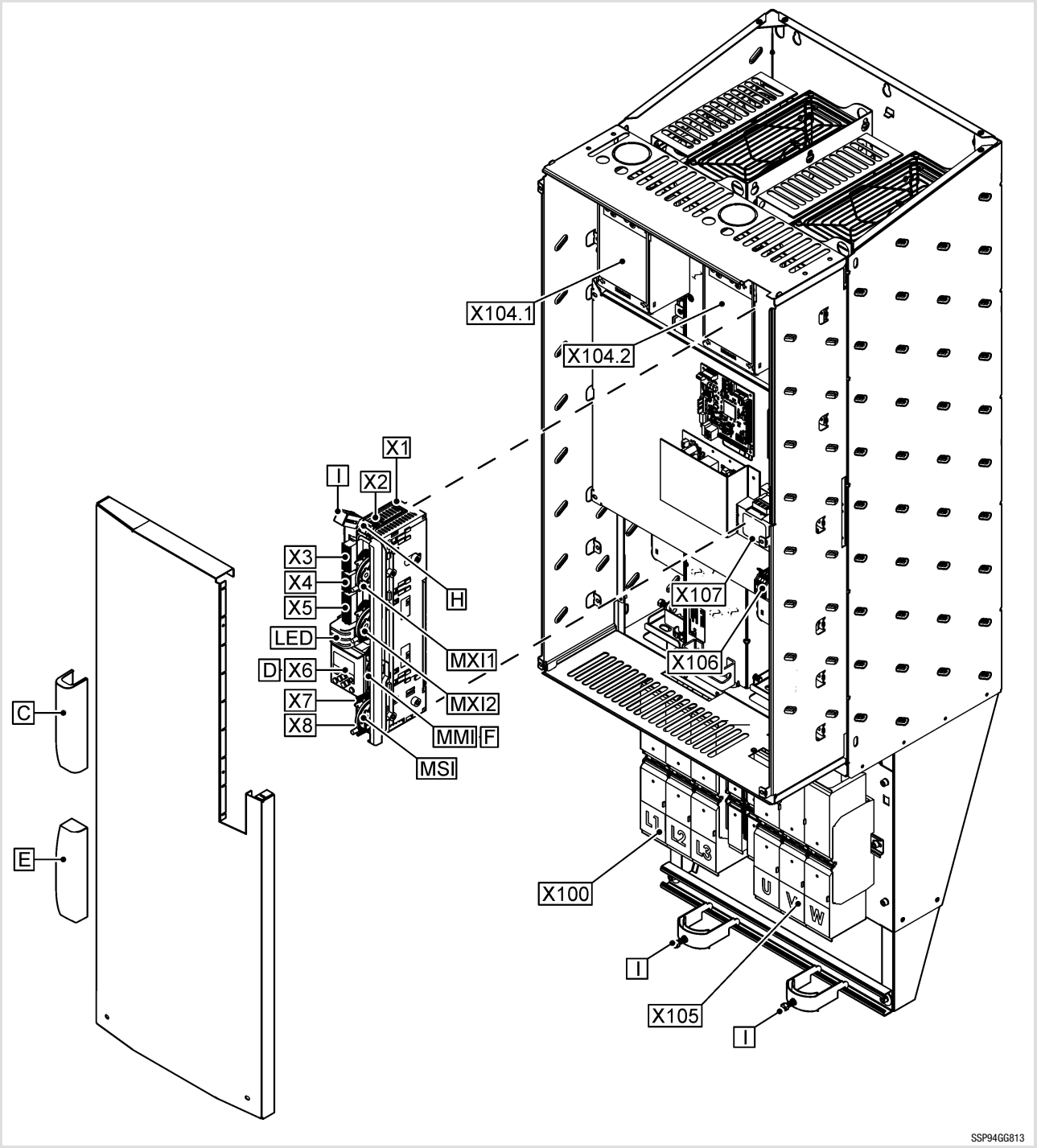

The control unit is firmly connected to the device. For a better presentation, it has been removed.

Pos.	Description
MXI1	Module receptacle for extension 1, e.g. communication
MXI2	Module receptacle for extension 2, e.g. communication
MMI	Module receptacle for memory modules
MSI	Module receptacle for safety equipment
X1	System bus (CAN), under the cover
X2	24-V supply / Statebus
X3	Analog inputs / analog outputs
X4	Digital outputs
X5	Digital inputs
X6	Diagnostics (with diagnostic adapter or keypad)
X7	Resolver
X8	Encoder
C	Lower cover
D	Retractable nameplate
E	Upper cover
I	EMC wire clamp
X100	Mains voltage
X104	DC-bus voltage/external brake resistor
X105	Motor
X106	Motor temperature monitoring
X107	Control of motor holding brake
H	EMC shield clamp
K	Holes for transport and assembly guides

The LED display enables fast indication of several operating states.

LED	Labelling	Colour	Description
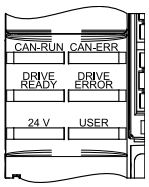 SSP94LED01	CAN-RUN	green	CAN bus ok
	CAN-ERR	red	CAN bus error
	DRIVE READY	green	Standard device is ready for operation
	DRIVE ERROR	red	Error in the standard device or application-induced
	24 V	green	24 V supply voltage ok
	USER	yellow	Message parameterised by the application

Pos.	Symbol	Description
F		**Long discharge time**: All power terminals carry hazardous electrical voltages for a longer period of time after mains disconnection! Depending on the device, this period of time may be up to 30 minutes.
		**High discharge current**: Carry out fixed installation and PE connection according to EN 61800-5-1!
		**Electrostatic sensitive devices**: Before working on the device, the personnel must be free of electrostatic charge!

3.6 Mechanical installation

3.6.1 Important notes

Note!

The devices must be installed in housings (e.g. control cabinets) to meet applicable regulations.

- The mounting location must always comply with the operating conditions specified in the technical data (📖 33). Take additional measures if necessary.
- The mounting plate of the control cabinet must have the following properties:
  – electrically conductive
  – free of lacquer
- The mechanical connections must always be ensured.
- A free air circulation must be ensured for dissipating the heat.
- The described EMC properties are provided if the following conditions are complied with:
  – The devices are mounted according to the arrangement concept described.
  – The prepared cables are used and remain unchanged.

3.6.2 Devices in the range 2 ... 24 A (0.37 ... 11 kW)

Mounting grid

We recommend to provide the mounting plate with a grid pattern of M5 threaded holes for attaching the devices. This preparation enables easy attachment of the devices, and the device sizes 1, 2, ... n can thus be mounted directly adjacent to each other.

Note!

- ► Permissible are M5 screw and washer assemblies or hexagon socket screws with washer.
- ► Tightening torque: 3.0 Nm / 26 lb-in.
- ► The screw joint in the installation backplane may jut out no more than 7 mm.

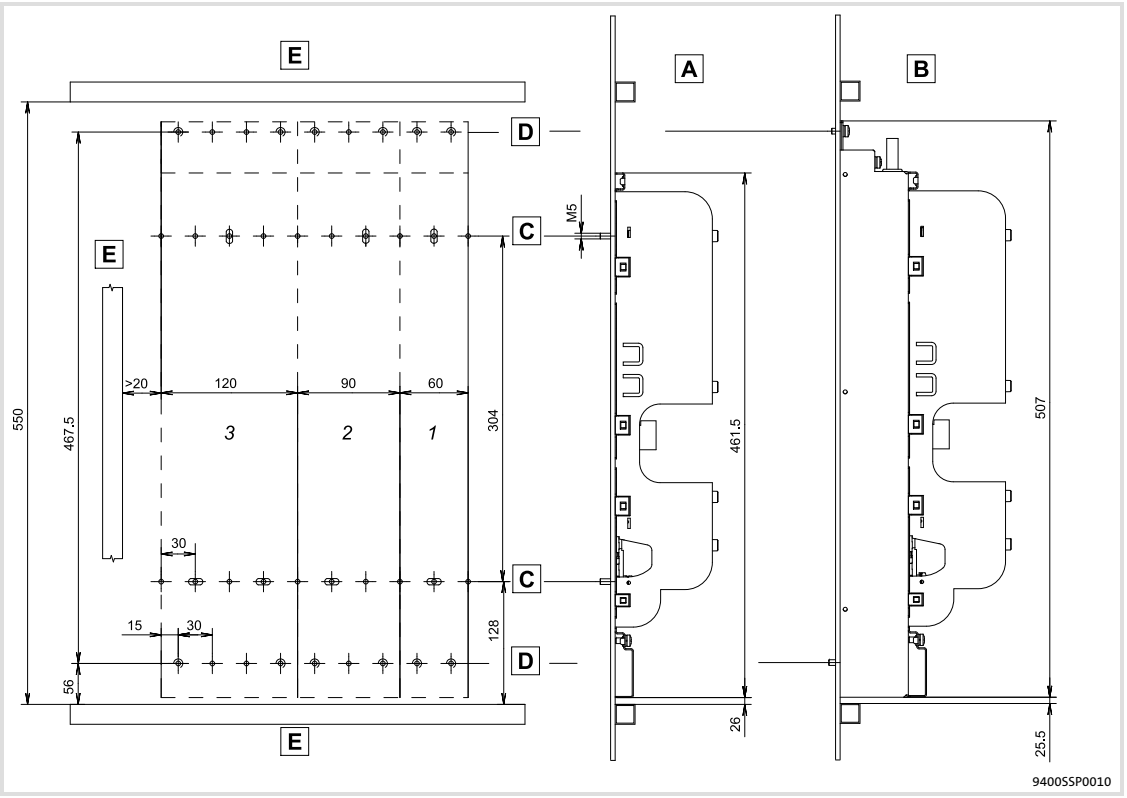

Fig. 3-14 Mounting grid for installation backplane and filter of device sizes 1 ... 3

- A Installation backplane without footprint filter (mains or RFI filter)
- B Installation backplane with footprint filter
- C Grid hole pattern for installation backplane (M5 threaded holes)
- D Grid hole pattern for footprint filter (M5 threaded holes)
- E Cable duct
- 1 ... 3 Device size, mounting holes used

Standard device with installation backplane

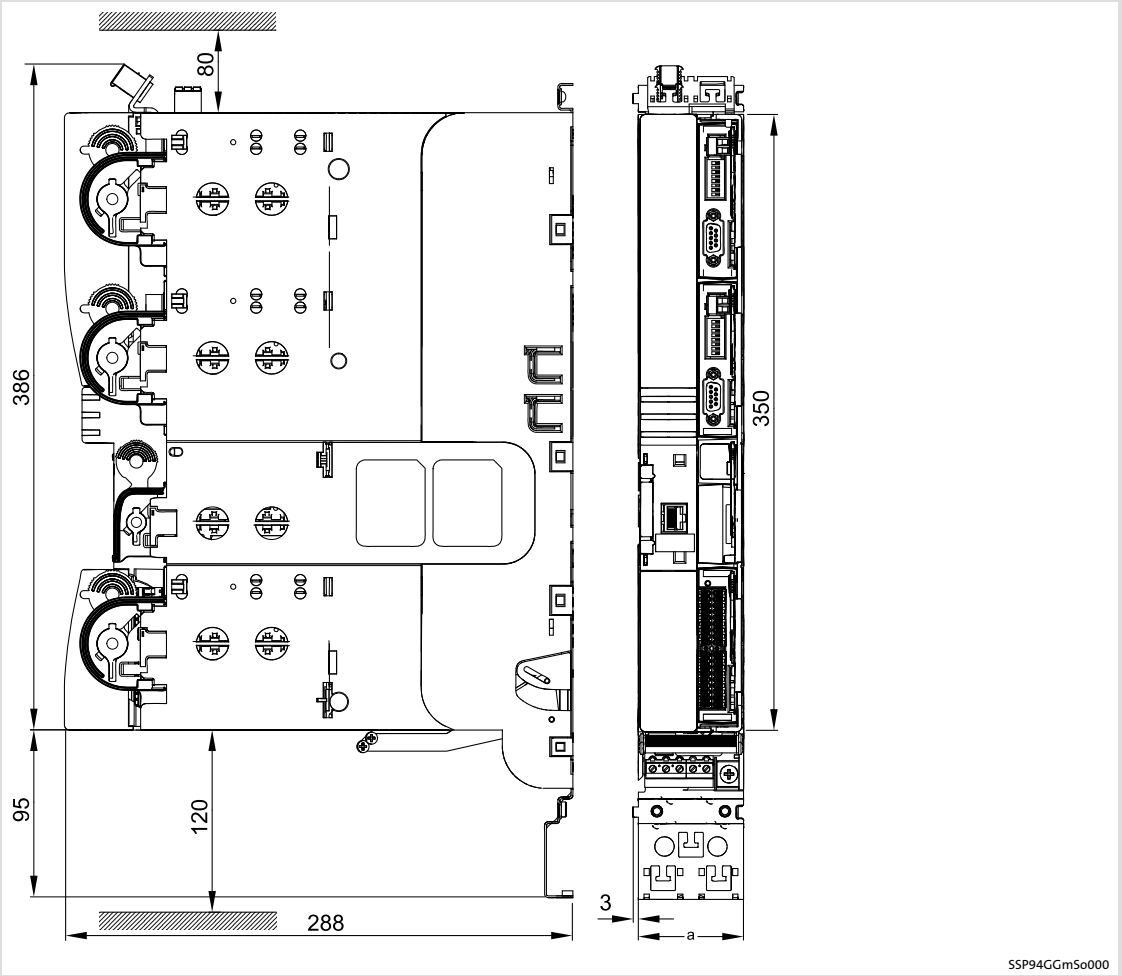

Fig. 3-15 Dimensions [mm]

Type	Dimensions a [mm]	Mass [kg]	Device size
E94xSxE0024	60	4.0	1
E94xSxE0034			
E94xSxE0044	90	5.3	2
E94xSxE0074			
E94xSxE0134	120	8.1	3
E94xSxE0174			
E94xSxE0244			

Installation steps

Proceed as follows for installation:

1. Prepare M5 threaded holes on the mounting plate according to the mounting grid.
2. When footprint filters are used: Screw installation backplane and footprint filter together.
   – Use screw and washer assemblies M5 x 20 mm or hexagon socket screws M5 x 20 mm with washer
   – Starting torque: 3.0 Nm (26 lb-in)
3. Screw the installation backplane or the footprint filter with installation backplane onto the mounting plate. Do not tighten the screws yet.
   – Use M5 screw and washer assemblies or M5 hexagon socket screws with washer.
   – The screw joint in the installation backplane may jut out no more than 7 mm.
4. Repeat steps 2 and 3 with further installation backplanes to be installed.
5. Align all installation backplanes.
6. Tightly screw all installation backplanes/footprint filters onto the mounting plate.
   – Tightening torque: 3.0 Nm (26 lb-in).

3.6.3 Devices in the range 32 ... 104 A (15 ... 55 kW)

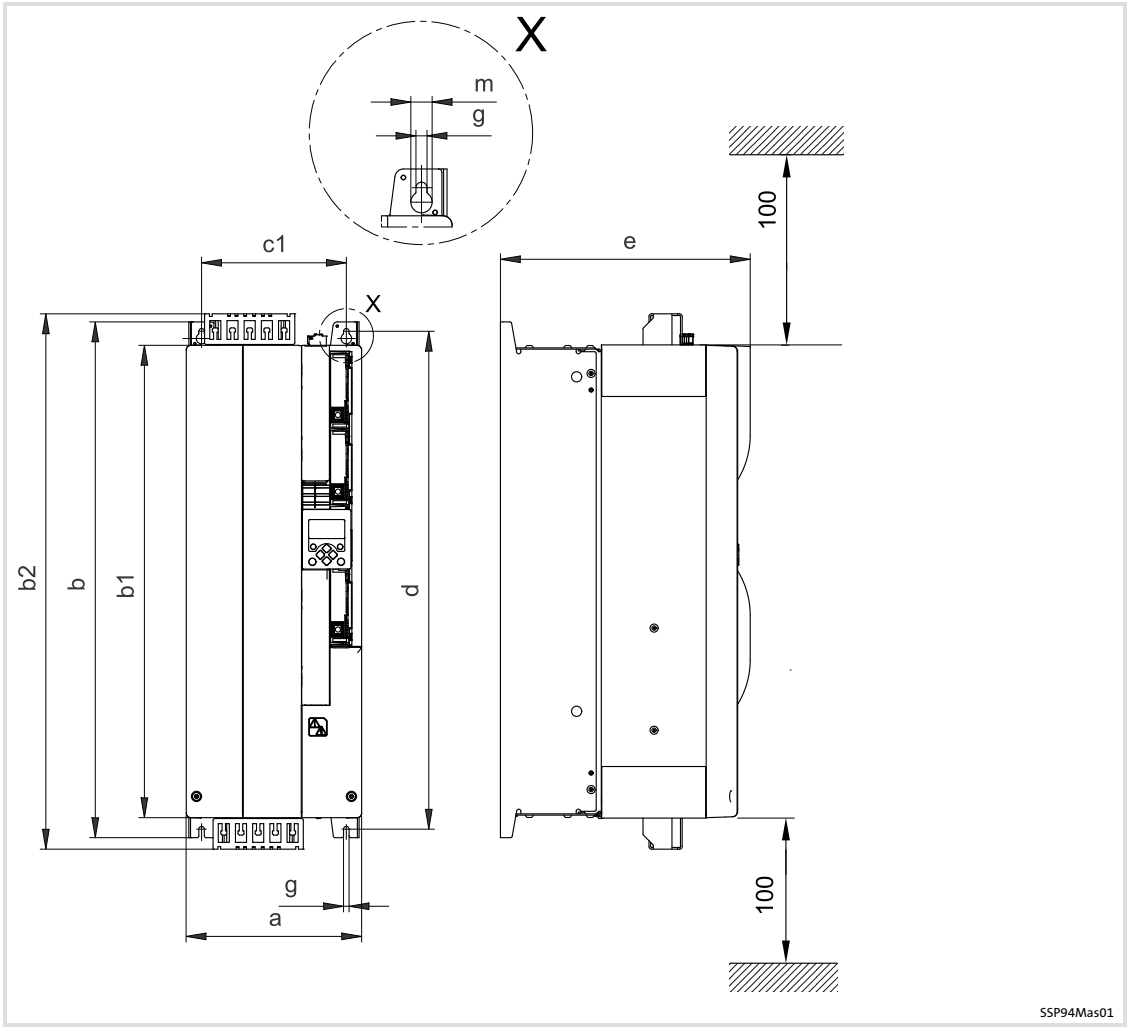

Fig. 3-16 Dimensions [mm]

Type	Dimensions [mm]									Weight [kg]	Device size
	a	b	b1	b2	e	c1	d	g	m		
E94xSxE0324	206	606	556	630	294	170	585	6.5	12.5	26.5	6
E94xSxE0474											
E94xSxE0594											
E94xSxE0864	266	706	655	729	370	230	685			42	7
E94xSxE1044											

3.6.4 Devices in the range 145 ... 292 A (75 ... 150 kW)

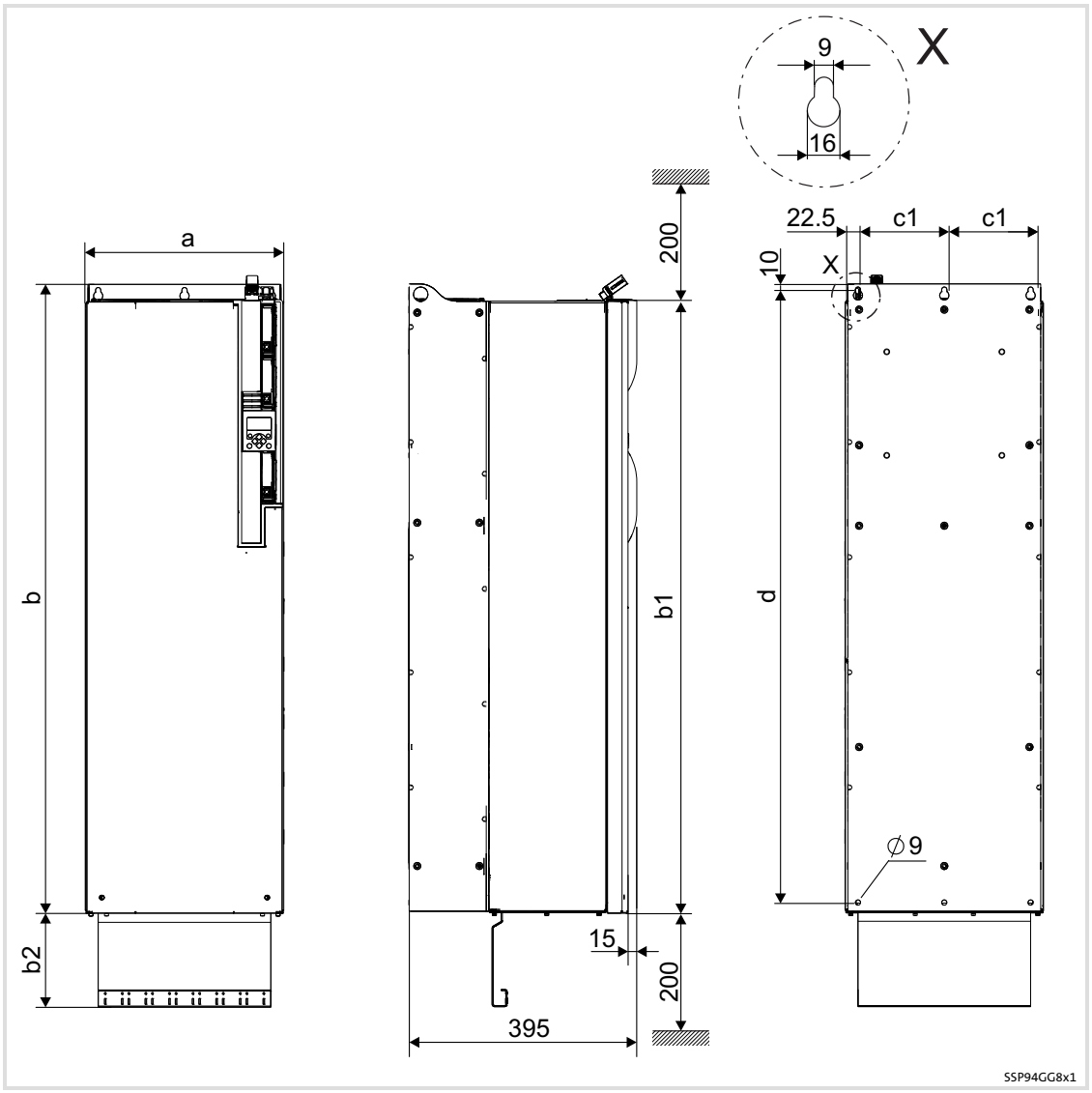

Fig. 3-17 Dimensions [mm]

Type	Dimensions [mm]						Mass	Device size
	a	b	b1	b2	c1	d	[kg]	
E94BSxE1454	285	950	923	-	120	925	64	81
E94BSxE1724	345	950	923	-	150	925	77	82
E94BSxE2024								
E94BSxE2454								
E94BSxE2924	345	1090	1063	160	150	1065	80	83

3.6.5 Devices in the range 366 ... 460 A (190 ... 240 kW)

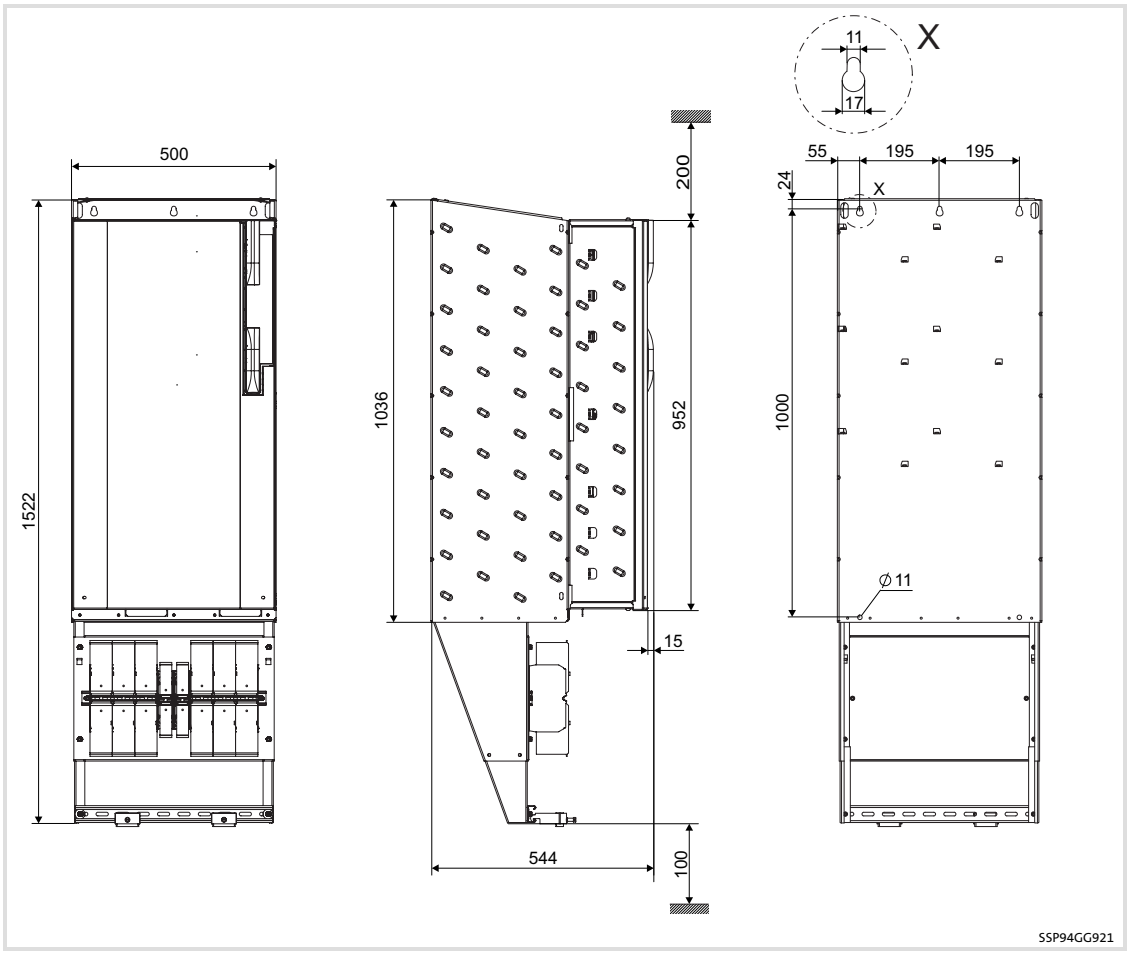

Fig. 3-18 Dimensions [mm]

Type	Mass [kg]	Device size
E94BSxE3664	189	91
E94BSxE4604		

3.7 Wiring

3.7.1 Important notes



Danger!

Hazardous electrical voltage

All power connections carry a hazardous electrical voltage for a longer time after mains disconnection. Observe the information regarding the discharge time on the device.

Possible consequences:

► Death or severe injuries when touching the power terminals.

Protective measures:

► Before working on the power connections, wait at least until the discharge time has passed (depending on the device, this may be up to 30 minutes).

► Make sure that all power terminals are deenergised.



Danger!

Hazardous electrical voltage

The leakage current to earth (PE) is > 3.5 mA AC or > 10 mA DC.

Possible consequences:

► Death or severe injuries when touching the device in the event of an error.

Protective measures:

Implement the measures required in EN 61800-5-1. Especially:

► Fixed installation
  – Implement PE connection in compliance with standards.
  – Connect PE conductor twice or PE conductor cross-section ≥ 10 mm^2.

► Connection with a connector for industrial applications according to IEC 60309 (CEE):
  – PE conductor cross-section ≥ 2.5 mm^2 as part of a multi-core supply cable.
  – Provide for suitable strain relief.



Stop!

The device contains components that can be destroyed by electrostatic discharge!

Before working on the device, the personnel must ensure that they are free of electrostatic charge by using appropriate measures.

Stop!

No device protection if the mains voltage is too high

The mains input is not internally fused.

Possible consequences:

► Destruction of the device if the mains voltage is too high.

Protective measures:

► Observe the maximally permissible mains voltage.

► Fuse the device correctly on the supply side against mains fluctuations and voltage peaks.

Stop!

Overvoltage on components:

On IT systems an earth fault in the installation can cause impermissible overvoltages.

Possible consequences:

Destruction of the device.

Protective measures:

If the devices are operated on IT systems, the internal connection of the filters to the protective earth in the installation backplane has to be disconnected (📖 109).

Note!

Switching operations on the motor side of the controller are permitted for safety switch-off (emergency off).

Please observe:

► When the controller is enabled, switching operations may lead to a response of the controller monitoring functions.

► The switching elements on the motor side must be rated for DC voltages with U_{DCmax} = 800 V.

3.7.2 Safety instructions for the installation according to UL/CSA

Note!

The fuse current given in the following is the maximum permissible value. This prevents fire and electrical hazard in the event of an error of the device.

The fuse must be smaller or equal to the maximum permissible value, taking the following into consideration:

- The maximum possible cable cross-section
- the laying system (e.g. tap installation)
- the ambient temperature
- the relevant regulations (e.g. UL508A, NEC70 and others).

Original - English

Device size 1 ... 3

Warnings!

- Branch circuit protection:
  - Suitable for use on a circuit capable of delivering not more than 100 000 rms symmetrical amperes, 480 V max., when protected by CC, J or T class fuses.
  - Suitable for motor group installation on a circuit capable of delivering not more than 100 000 rms symmetrical amperes, 480 V max., when protected by class CC, J or T class fuses.
  - Suitable for motor group installation on a circuit capable of delivering not more than 100 000 rms amperes, when supplied by a rectified AC-power supply of 480 V maximum, when protected by specified fuses.
  - Suitable for motor group installation on a circuit capable of delivering not more than 50 000 rms amperes (30 000 rms Amperes with fuse type 202922...), when supplied by a rectified AC-power supply of 480/277 V maximum, when protected by specified fuses.
  - Use specified fuses as shown in the table.
  - Above Short Circuit ratings are only valid when the Assembly Bases are used.
  - Integral solid state short circuit protection does not provide branch circuit protection. Branch circuit protection must be provided in accordance with the National Electrical Code / Canadian Electrical Code and any additional local codes.
- The opening of the branch circuit protective device may be an indication that a fault current has been interrupted. To reduce the risk of fire or electrical shock, current-carrying parts and other components of the controller should be examined and replaced if damaged. If burnout of the current element of an overload relay occurs, the complete overload relay must be replaced.
- For information on the protection level of the internal overload protection for a motor load in percent of FLA, see the corresponding Application Manuals or Software Helps.
- For information on rating and proper connection of the thermal protector (only for connection to motors having integral thermal protection), see the corresponding Application Manuals or Software Helps.
- Max. surrounding air temperature is 45 °C.
- Max. surrounding air temperature with derating is 55 °C.
- Use 60/75 °C copper wire only, except for control circuits.
- Secondary circuit shall supplied from an external isolating source.
- These products are intended for use in a pollution degree 2 environment.
- These products are intended for use in overvoltage category III.

Type	Branch circuit/short circuit protection with fuses in accordance with UL248	
	Standard installation	Motor group installation
	Nominal value (max.) [A]	Nominal value (max.) [A]
E94xSxE0024	8	15
E94xSxE0034	10	15
E94xSxE0044	15	20
E94xSxE0074	20	20
E94xSxE0134	45	60
E94xSxE0174	60	60
E94xSxE0244	60	60

Assignment of devices - DC-fuses				
	+UG/-UG (X100)		Busbar (X109/X110)	
	Nominal value (max.)	Type	Nominal value (max.)	Type
Type	[A]		[A]	
E94xSxE0024 E94xSxE0034	16	Siba 5020106.16 Siba 5020206.16	315	Eaton 170M1761 Eaton 170M1741
	63	Eaton 170M1754 Eaton 170M1734		
E94xSxE0044 E94xSxE0074	40	Siba 5020106.40 Siba 5020206.40		
	125	Eaton 170M1757 Eaton 170M1737		
E94xSxE0134 E94xSxE0174 E94xSxE0244	100	Siba 2029220.100 Siba 2029221.100		
	200	Eaton 170M1759 Eaton 170M1739		

Recommended fuse holder for type 170M...: Eaton (Bussmann) 170H1007

Device size 6 and 7

Warnings!

- ► Branch circuit protection:
  - – Suitable for use on a circuit capable of delivering not more than 100000 rms symmetrical amperes, 480 V max., when protected by CC, J or T class fuses.
  - – Suitable for motor group installation on a circuit capable of delivering not more than 100000 rms symmetrical amperes, 480 V max., when protected by class CC, J or T class fuses.
  - – Use specified fuses as shown in the table.
  - – Integral solid state short circuit protection does not provide branch circuit protection. Branch circuit protection must be provided in accordance with the National Electrical Code / Canadian Electrical Code and any additional local codes.
- ► The opening of the branch circuit protective device may be an indication that a fault current has been interrupted. To reduce the risk of fire or electrical shock, current-carrying parts and other components of the controller should be examined and replaced if damaged. If burnout of the current element of an overload relay occurs, the complete overload relay must be replaced.
- ► For information on the protection level of the internal overload protection for a motor load in percent of FLA, see the corresponding Application Manuals or Software Helps.
- ► For information on rating and proper connection of the thermal protector (only for connection to motors having integral thermal protection), see the corresponding Application Manuals or Software Helps.
- ► Max. surrounding air temperature is 45 °C.
- ► Max. surrounding air temperature with derating is 55 °C.
- ► E94xSxE0324 ... E94xSxE0594: Use 60/75 °C copper wire only, except for control circuits.
- ► E94xSxE0864 ... E94xSxE1044: Use 75 °C copper wire only, except for control circuits.
- ► Secondary circuit shall supplied from an external isolating source.
- ► These products are intended for use in a pollution degree 2 environment.
- ► These products are intended for use in overvoltage category III.

Type	Branch circuit/short circuit protection with fuses in accordance with UL248	
	Standard installation	Motor group installation
	Nominal value (max.) [A]	Nominal value (max.) [A]
E94xSxE0324	50	125
E94xSxE0474	60	125
E94xSxE0594	60	125
E94xSxE0864	100	300
E94xSxE1044	125	300

Device size 81 ... 91

Warnings!

- ► Branch circuit protection:
  - – Suitable for use on a circuit capable of delivering not more than 100000 rms symmetrical amperes, 500 V max.
  - – Use specified fuses as shown in the table. Voltage of the fuses must at least be suitable with the input voltage of the drive.
- ► The integral solid state protection does not provide branch circuit protection and that branch circuit protection has to be provided externally in accordance with manufacturers instructions, the National Electrical Code and any additional codes.
- ► For information on the protection level of the internal overload protection for a motor load in percent of FLA, see the corresponding Application Manuals or Software Helps.
- ► For information on rating and proper connection of the thermal protector (only for connection to motors having integral thermal protection), see the corresponding Application Manuals or Software Helps.
- ► Maximum surrounding air temperature: 40 °C.
- ► Use 75 °C copper wire only, except for control circuits.
- ► These products are intended for use in a pollution degree 2 environment.

Branch circuit protection
Any class J fuse rated 600 Vac, limited to high-interrupting capacity 100 kA min.
Current limiting types below:

Type	Nominal value (max.)
E94BSxE1454	175 A
E94BSxE1724	200 A
E94BSxE2024	250 A
E94BSxE2454	300 A
E94BSxE2924	350 A
E94BSxE3664	Supply input wire protection - The drive shall be protected by any UL Listed fuse in accordance with the NEC. (Note: The discrete internal semiconductor fuses are considered branch circuit protection)
E94BSxE4604	

Tab. 3-4

Original - French

Device size 1 ... 3

Avertissement !

- ► Protection par disjoncteur :
  - – Convient aux circuits non susceptibles de délivrer plus de 100 000 ampères symétriques eff., maximum 480 V, avec protection par des fusibles de calibre CC, J, ou T.
  - – Convient aux installations de groupe moteur sur des circuits non susceptibles de délivrer plus de 100 000 ampères symétriques eff., maximum 480 V, avec protection par des fusibles de calibre CC, J, ou T.
  - – Convient aux installations de groupe moteur sur des circuits non susceptibles de délivrer plus de 100 000 ampères eff., lorsque l'alimentation est fournie par une source de CA redressé de 480 V maximum, et lorsque cette source est protégée par des fusibles spécifiques.
  - – Convient aux installations de groupe moteur sur des circuits non susceptibles de délivrer plus de 50 000 ampères eff. (30 000 ampères eff. avec type de fusible 202922...), lorsque l'alimentation est fournie par une source de CA redressé de 480/277 V maximum, et lorsque cette source est protégée par des fusibles spécifiques.
  - – Utiliser les fusibles spécifiés comme indiqué dans le tableau.
  - – Les courants nominaux de court-circuit ci-dessus sont valables uniquement en cas d'utilisation de plaques de montage.
  - – La protection statique intégrée n'offre pas la même protection qu'un disjoncteur. Une protection par disjoncteur externe doit être fournie, conformément au National Electrical Code / Canadian Electrical Code, et aux autres dispositions applicables au niveau local.
- ► Le déclenchement du dispositif de protection du circuit de dérivation peut être dû à une coupure qui résulte d'un courant de défaut. Pour limiter le risque d'incendie ou de choc électrique, examiner les pièces porteuses de courant et les autres éléments du contrôleur ; les remplacer s'ils sont endommagés. Le relais de surcharge doit être remplacé en cas de grillage de l'élément traversé par le courant.
- ► Pour obtenir des informations sur le niveau de protection offert par la protection intégrée contre les surcharges du moteur (pourcentage de l'intensité assignée à pleine charge), se reporter aux manuels d'application ou aux systèmes d'aide logiciels.
- ► Pour obtenir des informations sur les caractéristiques assignées et sur le câblage du dispositif de protection thermique (concerne uniquement le raccordement aux moteurs dotés d'un dispositif de protection thermique intégré), se reporter aux manuels d'application ou aux systèmes d'aide logiciels.

- ► Température ambiante maximale : 45 °C
- ► Température ambiante maximale avec réduction de puissance : 55 °C
- ► Utiliser exclusivement des conducteurs en cuivre 60/75 °C, sauf pour la partie commande.
- ► Prévoir un circuit auxiliaire alimenté par une source de tension avec isolation galvanique.
- ► Ces produits sont destinés à un environnement caractérisé par le degré de pollution 2.
- ► Ces produits sont conçus pour une utilisation dans la catégorie de surtension III.

Type	Protection du circuit de dérivation / protection contre les courts-circuits par fusibles conformément à UL248	
	Installation standard	Installation au sein d'un groupe moteur
	Valeur nominale (max.) [A]	Valeur nominale (max.) [A]
E94xSxE0024	8	15
E94xSxE0034	10	15
E94xSxE0044	15	20
E94xSxE0074	20	20
E94xSxE0134	45	60
E94xSxE0174	60	60
E94xSxE0244	60	60

Combinaison entre les appareils et les fusibles CC

Type	+UG/-UG (X100)		Barre conductrice (X109/X110)	
	Valeur nominale (max.) [A]	Type	Valeur nominale (max.) [A]	Type
E94xSxE0024 E94xSxE0034	16	Siba 5020106.16 Siba 5020206.16	315	Eaton 170M1761 Eaton 170M1741
	63	Eaton 170M1754 Eaton 170M1734		
E94xSxE0044 E94xSxE0074	40	Siba 5020106.40 Siba 5020206.40		
	125	Eaton 170M1757 Eaton 170M1737		
E94xSxE0134 E94xSxE0174 E94xSxE0244	100	Siba 2029220.100 Siba 2029221.100		
	200	Eaton 170M1759 Eaton 170M1739		

Porte-fusible recommandé pour Typ 170M... : Eaton (Bussmann) 170H1007

Device size 6 and 7

Avertissement !

- ► Protection par disjoncteur :
  - – Convient aux circuits non susceptibles de délivrer plus de 100000 ampères symétriques eff., maximum 480 V, avec protection par des fusibles de calibre CC, J, ou T.
  - – Convient aux installations de groupe moteur sur des circuits non susceptibles de délivrer plus de 100 000 ampères symétriques eff., maximum 480 V, avec protection par des fusibles de calibre CC, J, ou T.
  - – Utiliser les fusibles spécifiés comme indiqué dans le tableau.
  - – La protection statique intégrée n'offre pas la même protection qu'un disjoncteur. Une protection par disjoncteur externe doit être fournie, conformément au National Electrical Code / Canadian Electrical Code, et aux autres dispositions applicables au niveau local.
- ► Le déclenchement du dispositif de protection du circuit de dérivation peut être dû à une coupure qui résulte d'un courant de défaut. Pour limiter le risque d'incendie ou de choc électrique, examiner les pièces porteuses de courant et les autres éléments du contrôleur ; les remplacer s'ils sont endommagés. Le relais de surcharge doit être remplacé en cas de grillage de l'élément traversé par le courant.
- ► Pour obtenir des informations sur le niveau de protection offert par la protection intégrée contre les surcharges du moteur (pourcentage de l'intensité assignée à pleine charge), se reporter aux manuels d'application ou aux systèmes d'aide logiciels.
- ► Pour obtenir des informations sur les caractéristiques assignées et sur le câblage du dispositif de protection thermique (concerne uniquement le raccordement aux moteurs dotés d'un dispositif de protection thermique intégré), se reporter aux manuels d'application ou aux systèmes d'aide logiciels.
- ► Température ambiante maximale : 45 °C
- ► Température ambiante maximale avec réduction de puissance : 55 °C
- ► E94xSxE0324 ... E94xSxE0594 : Utiliser exclusivement des conducteurs en cuivre 60/75 °C, sauf pour les circuits de commande.
- ► E94xSxE0864 ... E9xASxE1044 : Utiliser exclusivement des conducteurs en cuivre 75 °C, sauf pour les circuits de commande.
- ► Prévoir un circuit auxiliaire alimenté par une source de tension avec isolation galvanique.
- ► Ces produits sont destinés à un environnement caractérisé par le degré de pollution 2.
- ► Ces produits sont conçus pour une utilisation dans la catégorie de surtension III.

Type	Protection du circuit de dérivation / protection contre les courts-circuits par fusibles conformément à UL248	
	Installation standard	Installation au sein d'un groupe moteur
	Valeur nominale (max.) [A]	Valeur nominale (max.) [A]
E94xSxE0324	50	125
E94xSxE0474	60	125
E94xSxE0594	60	125
E94xSxE0864	100	300
E94xSxE1044	125	300

Device size 81 ... 91

Avertissement !

- ► Protection par disjoncteur :
  - – Convient aux circuits non susceptibles de délivrer plus de 100000 ampères symétriques eff., maximum 500 V.
  - – Utiliser les fusibles indiqués dans le tableau. La tension des fusibles doit être adaptée à la tension d'entrée de l'entraînement.
- ► La protection statique intégrée n'offre pas la même protection qu'un disjoncteur. Une protection par disjoncteur externe doit être fournie, conformément aux indications du fabricant, au National Electrical Code et aux autres dispositions applicables.
- ► Pour obtenir des informations sur le niveau de protection offert par la protection intégrée contre les surcharges du moteur (pourcentage de l'intensité assignée à pleine charge), se reporter aux manuels d'application ou aux systèmes d'aide logiciels.
- ► Pour obtenir des informations sur les caractéristiques assignées et sur le câblage du dispositif de protection thermique (concerne uniquement le raccordement aux moteurs dotés d'un dispositif de protection thermique intégré), se reporter aux manuels d'application ou aux systèmes d'aide logiciels.
- ► Température ambiante maximale : 40 °C.
- ► Utiliser exclusivement des conducteurs en cuivre 75 °C, sauf pour la partie commande.
- ► Ces produits sont destinés à un environnement caractérisé par le degré de pollution 2.

Protection du circuit de dérivation
Tout fusible de classe J à tension assignée de 600 Vac, limité à une haute capacité de coupure de 100 kA mini.
Types de limitation actuels ci-dessous :

Type	Valeur nominale (max.)
E94BSxE1454	175 A
E94BSxE1724	200 A
E94BSxE2024	250 A
E94BSxE2454	300 A
E94BSxE2924	350 A
E94BSxE3664	Fournir la protection de câble d'entrée - Le moteur peut être protégé par tout fusible certifié UL conformément au NEC (National Electrical Code). (Remarque : les fusibles internes et discrets pour semi-conducteurs sont considérés comme une protection de circuit de dérivation)
E94BSxE4604	

Tab. 3-5

3.7.3 Earthing of internal EMC filters

Device-internal EMC filters have been implemented to reduce interference emission. These EMC filters are connected to protective earth to discharge interference currents.

Under certain conditions the EMC filters must be disconnected from:

- Operation in an IT system
  The devices are protected from damages or destruction due to incompatible overvoltages in the case of an error (earth fault).
- DC-bus operation
- Operation with power supply modules or regenerative power supply modules
- Operating multiple devices with a common filter
  The EMC properties can only be reached by carrying out the described measures.
  The triggering behaviour of applicable earth-leakage circuit breakers remains undisturbed.

Overview of the measures

The measures which are to be carried out once have been prepared in relation to the devices and are each described together with installation and wiring.

Device (GG = device size)	Measure in the case of operation ...	
	in the IT system	in the interconnected system, with power supply modules or shared filters
Inverter		
with installation backplane (GG1 ... GG3)	Insert plastic cap elsewhere	
without installation backplane (GG6 ... GG7)	Change screwed connection	
without installation backplane (GG81 ... GG83)	Change screwed connection	
without installation backplane (GG91)	Only factory-set measures are possible. Please specify when ordering.	
Power supply modules		
with installation backplane (GG1 und GG3)	No measure necessary	
without installation backplane (GG4 ... GG5)	No measure necessary	
Regenerative power supply modules		
with installation backplane (GG3)	Insert plastic cap elsewhere	
associated mains filter	Change screwed connection	No measure necessary

Device size 1 ... 3

Proceed as follows to disconnect the internal connection between the filters and PE:

1. Remove IT insulating cap from the parking position ① in the installation backplane.
   – For this apply a screwdriver on the right or left and lever off the insulating cap.
   – Optionally the insulating cap can be carefully removed using an appropriate pliers.
2. Attach IT insulating cap to the earthing jumper ② until it clicks into place.



Fig. 3-19 Plugging the IT insulating cap onto the earthing jumper

Device size 6 and 7

Proceed as follows to disconnect the internal connection between the filters and PE:

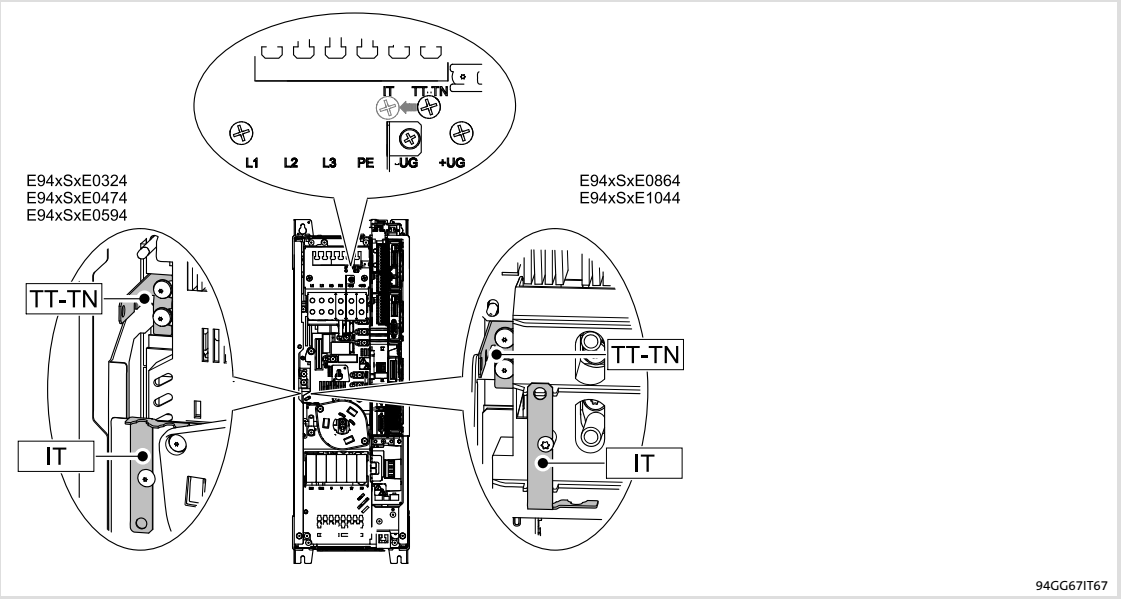

Fig. 3-20

1. There is a screw above the X100 (+UG/-UG) terminals in the position ”TT-TN”.
2. Unscrew the screw and screw it in again at position ”IT”.
   – Tightening torque: 3.4 Nm (30 lb-in)
3. There is a metal lug on the left in the device.
4. Unbolt the screws to remove the metal strap.
5. Unbolt the screw at position ”IT” and insert the metal strap.
6. Tighten all screws.
   – Tightening torque: 3.4 Nm (30 lb-in)

After this, the device is suitable for operation in IT systems.

Device sizes 81 and 82

Proceed as follows to disconnect the internal connection between the filters and PE:

1. The bridge [A] that connects the filter with the protective earth can be found at the indicated position.
2. Loosen both screws [B] (do not remove them).
3. Fold the bridge [A] downwards clockwise by 90°.
4. Tighten both screws [A].
   – Starting torque: 3.4 Nm (30 lb-in)

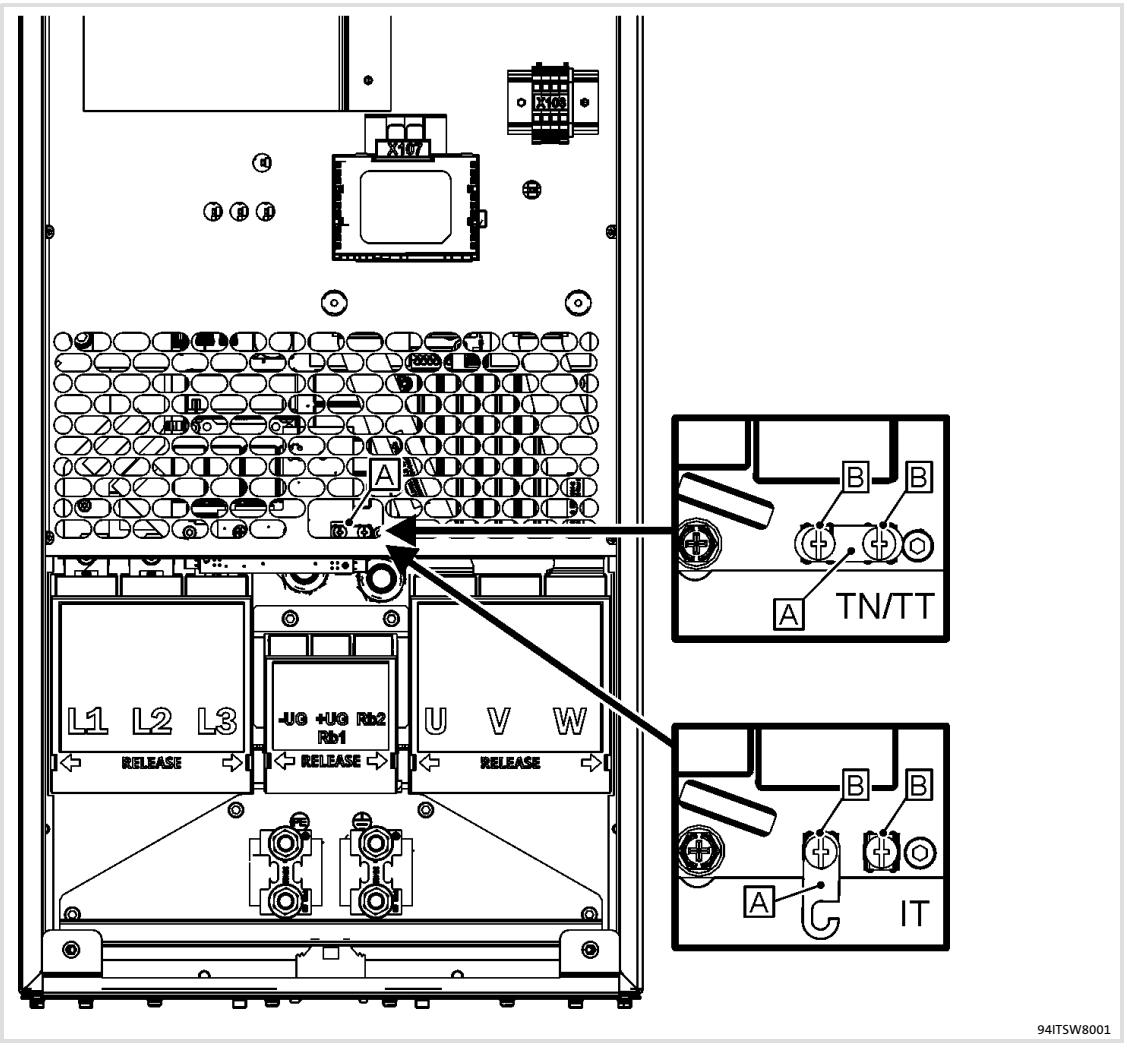

Device size 83

Proceed as follows to disconnect the internal connection between the filters and PE:

1. The bridge [A] that connects the filter with the protective earth can be found at the indicated position.
2. Loosen both screws [B] (do not remove them).
3. Fold bridge [A] 90° clockwise.
4. Tighten both screws [A].
   – Starting torque: 3.4 Nm (30 lb-in)

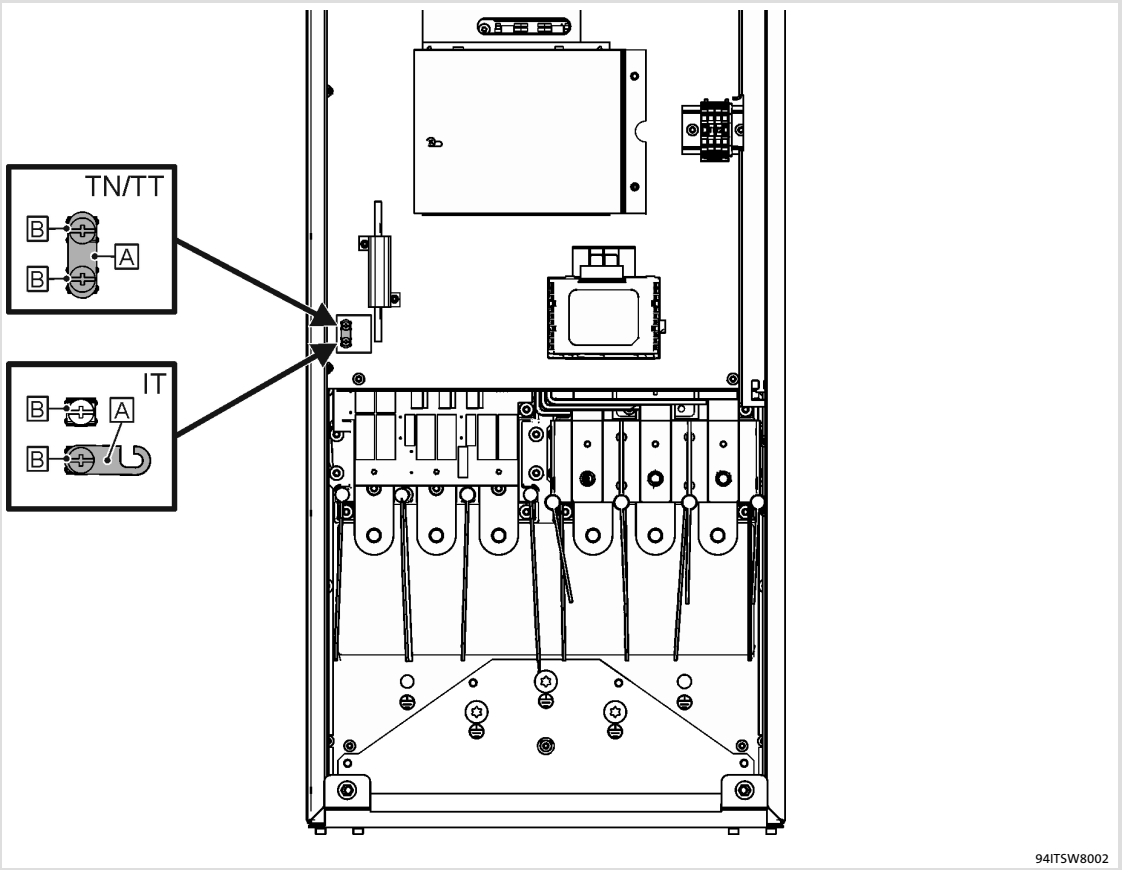

Device size 91

If devices of this size are to be used in IT systems, factory-set measures have to be taken. Please consider this when ordering.

3.7.4 Devices in the range 2 ... 24 A (0.37 ... 11 kW)

Example circuit

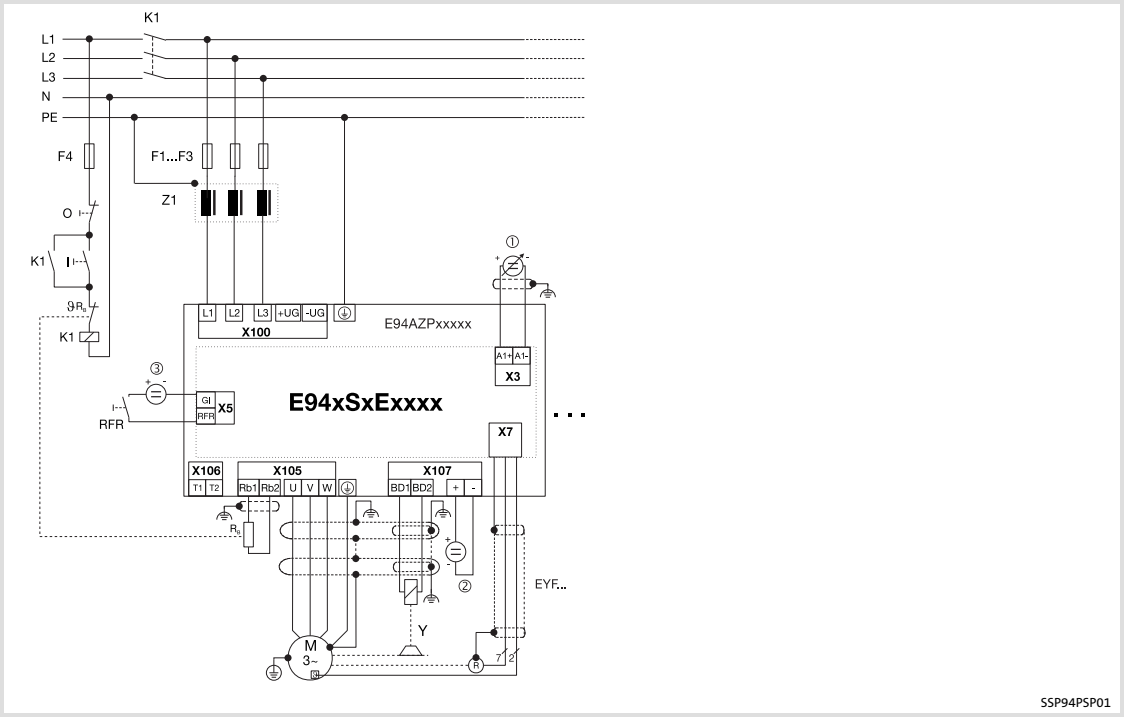

Fig. 3-21 Basic circuit diagram of the drive system

E94xSxExxxx	9400 Single Drive servo axis module
E94AZPxxxxx	Installation backplane
F1 ... F4	Fuses
Z1	Mains filter/RFI filter (optional)
⏚	HF shield termination through large-surface connection to functional earth
EYF...	System cable for resolver feedback
RFR	Controller enable
K1	Mains contactor
R	Resolver
RB	Brake resistor
Y	Motor holding brake (connected to optional motor brake control)
①	Speed setpoint selection via analog input 1 (-10 ... 0 ... +10 V)
②	Voltage source for the motor holding brake
③	24-V voltage source for the digital inputs according to IEC 61131-2

Tip!

Complete the wiring of the installation backplane before plugging in the standard device. The upper terminals of the installation backplane cannot be connected with a plugged-in standard device.

Design of the cables

- The cables used must comply with the approvals required for the location (e.g. UL).
- The cross-section of the PE conductor must be dimensioned according to the relevant national regulations.
- The effectiveness of a shielded cable is reached by:
  - Providing a good shield connection through large-surface shield contact.
  - Using only braided shields with low shield resistance made of tin-plated or nickel-plated copper braid.
  - Using braided shields with an overlap rate > 70 % and an overlap angle of 90 °.
  - Keeping unshielded cable ends as short as possible.

Use system cables or shielded cables for these connections:

- Motor
- Motor holding brake (shielding is required when being integrated into the motor cable; connection to optional motor brake control)
- Motor temperature monitoring
- External brake resistor (Mounting Instructions of the brake resistor)
- DC bus, cable length from 0.3 m

The following connections need not be shielded:

- Mains
- DC bus, cable length up to 0.3 m

How to connect the shield

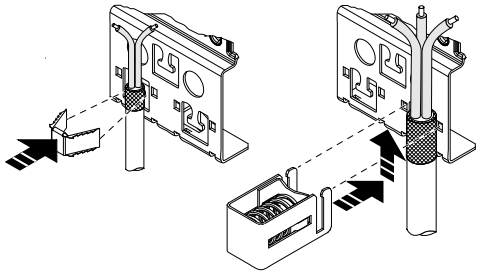

E94AZPS004

Mains

Terminal X100 (left part)	Labelling	Description
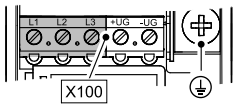 SSP940X100	L1 L2 L3	Connection of the mains phases L1, L2, L3
	⏚	Connection for the supply-side PE conductor with M5 ring cable lug

Terminal data					
	Max. conductor cross-section		Tightening torque		
	[mm²]	[AWG]	[Nm]	[lb-in]	
Device sizes 1 + 2: flexible with wire end ferrule	2.5	12	0.5 ... 0.6	4.5 ... 5.3	PZ0
Device size 3: flexible with/without wire end ferrule	10/16	6	1.2 ... 1.5	10.6 ... 13.3	PH1

DC bus

Terminal X100 (right part)	labelling	Description
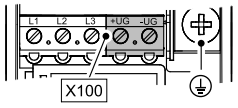 SSP940X100	+UG -UG	Alternative way of connecting the DC-bus voltage (compatible with the 9300 series). Max. continuous current I_{dc}: Device size 1: 5.3 A Device size 2: 15.2 A Device size 3: 44.4 A Device size 6: 66 A Device size 7: 116 A

Terminal data					
	Max. conductor cross-section		Tightening torque		
	[mm²]	[AWG]	[Nm]	[lb-in]	
Device sizes 1 + 2: flexible with wire end ferrule	2.5	12	0.5 ... 0.6	4.5 ... 5.3	PZ0
Device size 3: flexible with/without wire end ferrule	10/16	6	1.2 ... 1.5	10.6 ... 13.3	PH1

External brake resistor

Terminal X105 (left part)	Labelling	Description
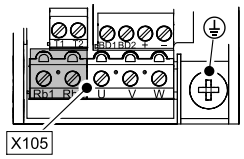 SSP94LX105	Rb1 Rb2	External brake resistor
	⏚	Connection for the PE conductor with M5 ring cable lug.

Terminal data

	Max. conductor cross-section		Tightening torque		
	[mm²]	[AWG]	[Nm]	[lb-in]	
Device sizes 1 + 2: flexible with wire end ferrule	2.5	12	0.5 ... 0.6	4.5 ... 5.3	PZ0
Device size 3: flexible with/without wire end ferrule	10/16	6	1.2 ... 1.5	10.6 ... 13.3	PH1

Motor

Terminal X105 (right part)	Labelling	Description
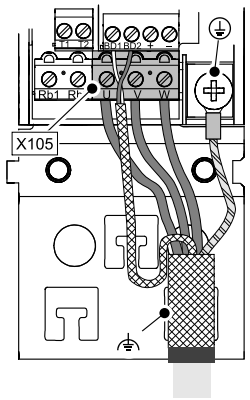	U V W	Connection of the motor phases
	⏚	Functional earth Connect the shields of the motor phases and of the optional motor brake control separately and with a surface as large as possible to the shield sheet. Use EMC wire clamp or EMC shield clamp for fixing.
	⏚	Connection for the PE conductor on the motor side with M5 ring cable lug

Terminal data

	Max. conductor cross-section		Tightening torque		
	[mm²]	[AWG]	[Nm]	[lb-in]	
Device sizes 1 + 2: flexible with wire end ferrule	2.5	12	0.5 ... 0.6	4.5 ... 5.3	PZ0
Device size 3: flexible with/without wire end ferrule	10/16	6	1.2 ... 1.5	10.6 ... 13.3	PH1

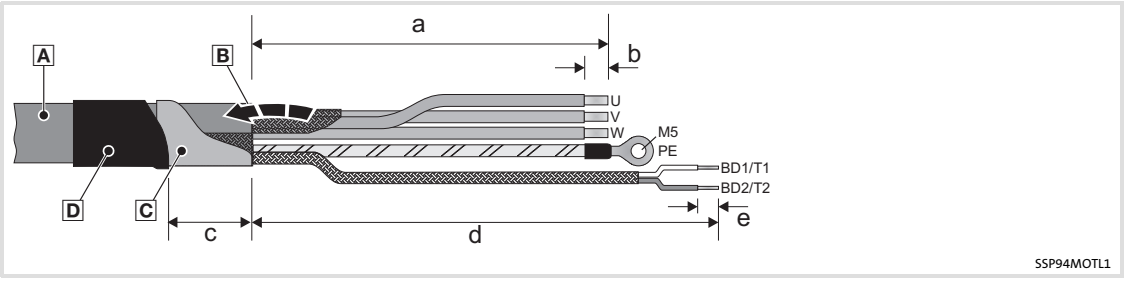

Fig. 3-22 Stripping lengths of the motor cable

Type	Dimensions [mm]				
	a	b	c	d	e
Device size 1	80	8	25	150	8
Device size 2	90	8	30	160	8
Device size 3	100	10	30	170	8

How to proceed:

1. Strip the motor cable [A] according to dimensions given.
2. Fold back the shield of the motor cable [B] over the cable sheath.
3. Stabilise the shield with self-adhesive conductive foil [C] (recommendation).
4. Fix the shield and conductive foil with heat-shrinkable tube [D] on the cable sheath.
5. Fasten cable lugs or wire end ferrules.
6. Connect the shields separately to the shield sheet using shield clamps (no strain relief).

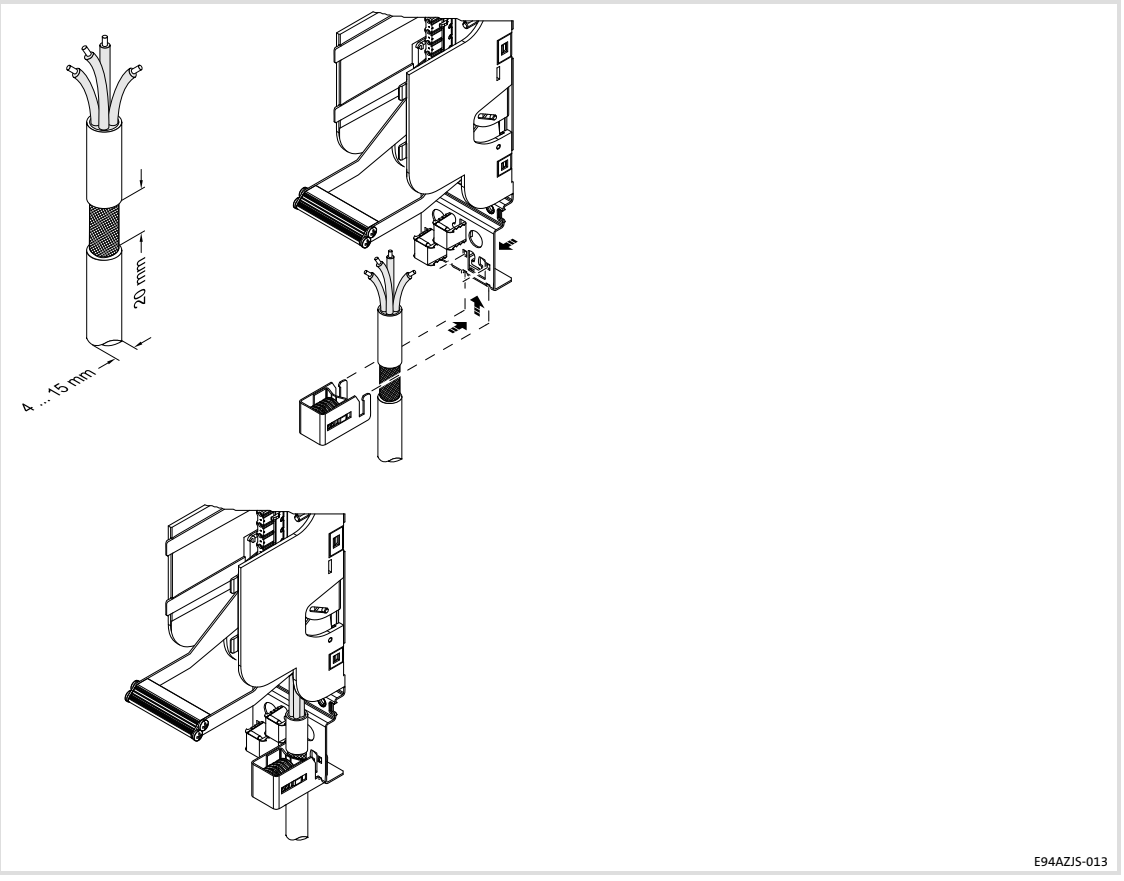

Motor temperature monitoring

Terminal X106	Labelling	Description
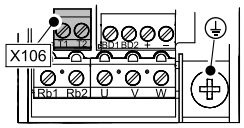 SSP940X106	T1 T2	Motor temperature monitoring with PTC element (type-A sensor, switching performance according to EN 60947-8 for type-A tripping units) or thermostat (NC contact).

Terminal data					
	Max. conductor cross-section		Tightening torque		
	[mm²]	[AWG]	[Nm]	[lb-in]	
Flexible With wire end ferrule	2.5	12	0.5 ... 0.6	4.5 ... 5.3	PZ0

Motor brake control (optional)

Note!

When the 24 V supply voltages (at X2) are applied and a motor holding brake is available, the devices respond as follows:

- ► Single Drive without mains or DC-bus voltage: The motor holding brake **cannot** be released.
- ► Multi Drive without DC-bus voltage: The motor holding brake can be released.

Tip!

For detailed information on the motor holding brake control modules, please see the chapter Accessories (📖 141).

For information on the E94AZHX0051 motor holding brake control module optionally contained in the installation backplane, please see the chapter Accessories starting on page 455.

Terminal X107	Labelling	Description
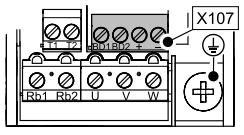 SSP940X107	BD1 BD2	Connection of the motor holding brake + (Lenze: WH) - (Lenze: BN) E94AZHX0051: 24 V DC, max. 2.5 A Observe correct polarity!
	+ / -	Supply voltage for the motor holding brake (18 ... 30 V DC) Observe correct polarity!

Terminal data					
	Max. conductor cross-section		Tightening torque		
	[mm²]	[AWG]	[Nm]	[lb-in]	
Flexible With wire end ferrule	2.5	12	0.5 ... 0.6	4.5 ... 5.3	PZ0

Stripping length or contact length: 8 mm

Stop!

The motor brake control includes an electronic switch which can control a 24 V motor holding brake.

The motor brake control may only be connected with motor holding brakes which correspond to the permissible data mentioned in the technical data. (If required, the holding brake without motor brake control must be controlled via a digital output and a coupling relay).

If the permissible data mentioned in the technical data are not complied with:

► the motor brake control can be destroyed.

► a safe operation of the motor holding brake cannot be guaranteed.

Further notes in the documentation of the standard device must be observed!

Stop!

Requirements concerning the brake cable (connection BD1/BD2):

► The brake cables must be shielded if they are incorporated in the motor cable.
  – Operation with unshielded brake cables can destroy the motor brake control.
  – We recommend the use of Lenze system cables (motor cable with separately shielded additional cores).

► When using a permanent magnet holding brake, ensure the correct polarity of the brake cable.
  – If the terminals are reversed, the brake does not release. Since the motor runs against the closed brake, the brake can be destroyed.

► Connect the shield on both sides of PE.

Requirements concerning the supply voltage U_{DC} (connection +/-):

► The motor brake control must always be supplied with a separate 24 V supply.
  – A common supply of the motor brake control and the control card of the controller is not permissible since otherwise the double insulation between both components would be reduced.

► Set U_{DC} so that the operating voltage of the brake is within the admissible range and the maximum supply voltage of the motor brake control will not be exceeded.

Installation of the standard device

After the wiring of the installation backplane has been fully completed, install the standard device. Then continue with the wiring of the control terminals.

How to proceed:

1. Insert the device into the installation backplane without twisting it until resistance is felt.
2. Press the device into the installation backplane until it audibly snaps into place. The locking clip moves downwards and back into the locking position.
3. The end position is reached when the locking clip can be pressed against the device. Now the device is locked.

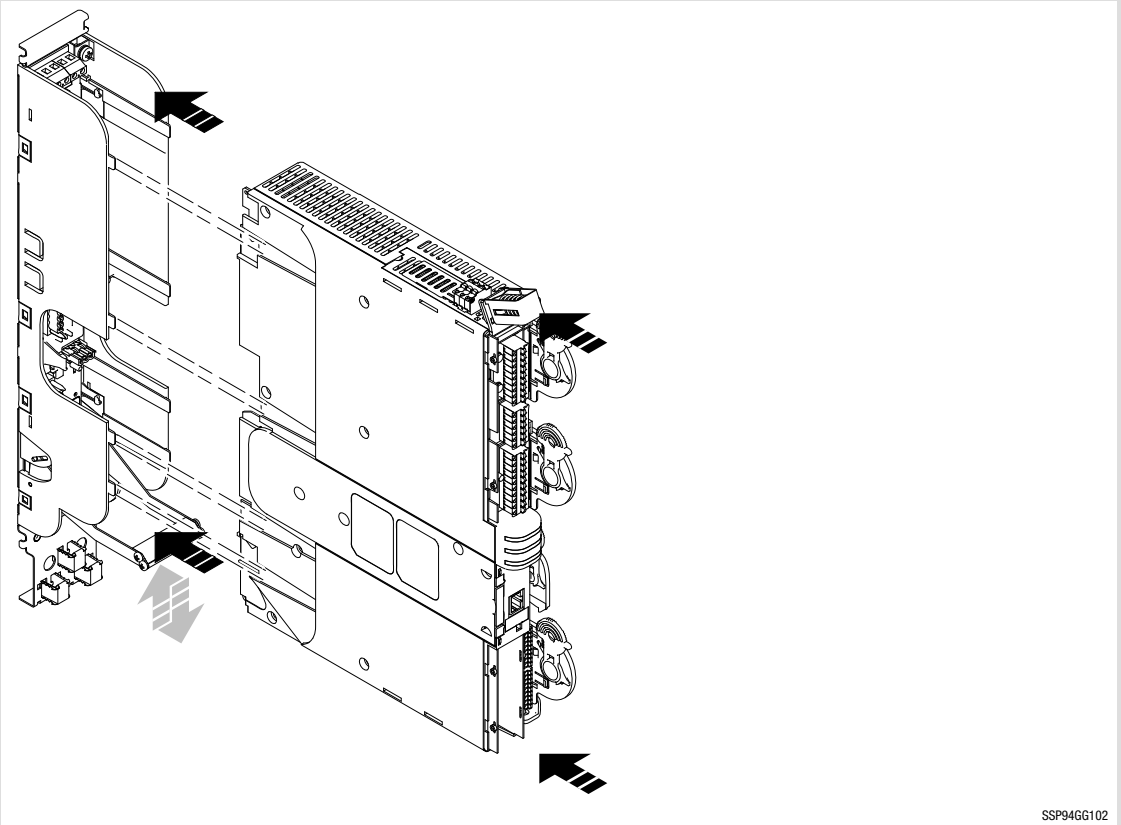

Fig. 3-23 Installation of the device

Proceed as follows to remove the device:

1. Disconnect already wired connectors at the device.
2. Push the locking clip downwards to release the device and disengage it from the contacts.
3. Pull the device completely out of the installation backplane and remove it. The locking clip moves back into the locking position.

3.7.5 Devices in the range 32 ... 104 A (15 ... 55 kW)

Example circuit

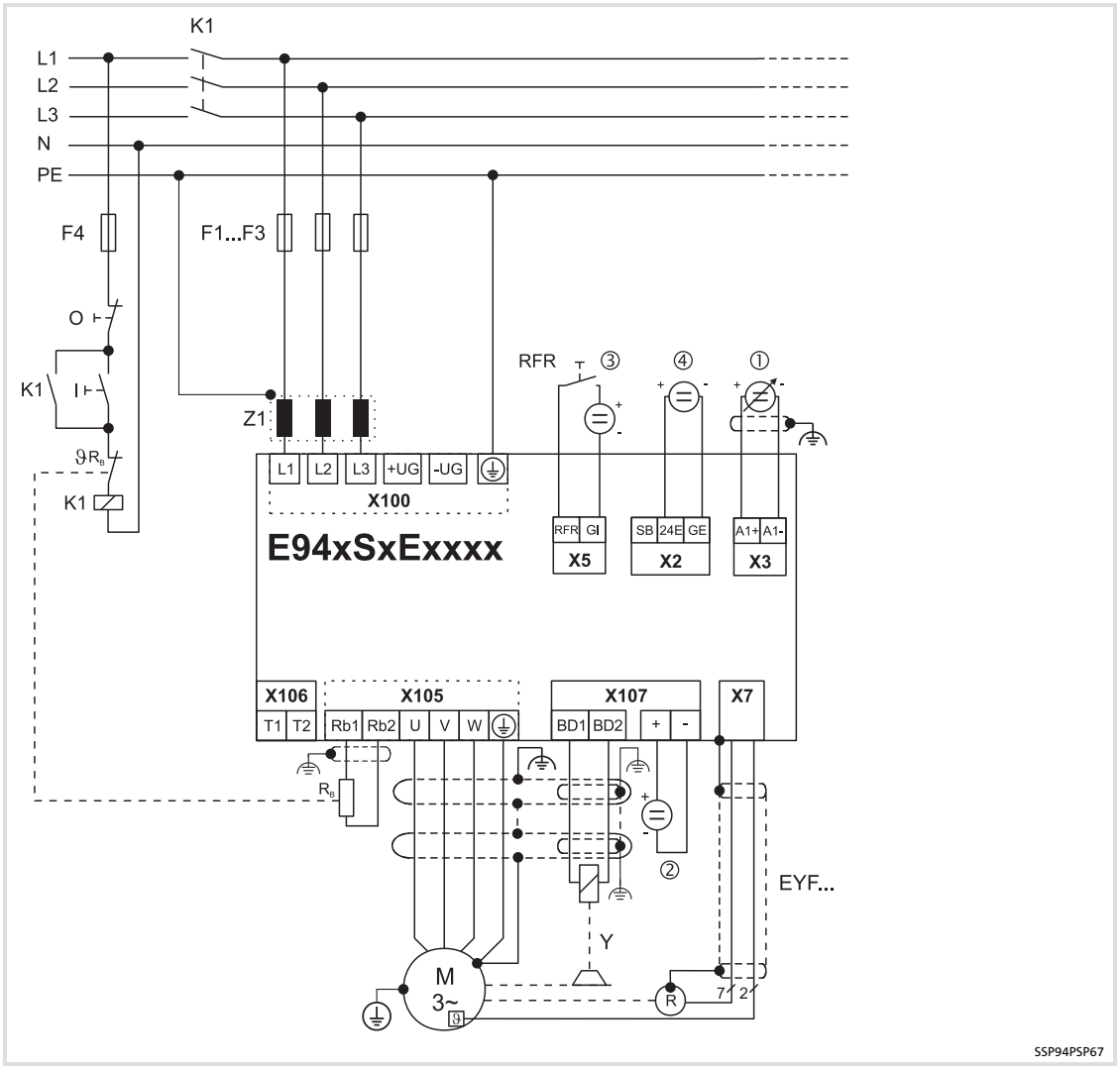

Fig. 3-24 Basic circuit diagram of the drive system

E94xSxExxxx	Servo axis module 9400 Single
F1 ... F4	Fuses
Z1	Toroidal core, effective in the high-frequency range 30 ... 60 MHz
⏚	HF-shield termination through large-surface connection to functional earth
EYF...	System cable - resolver feedback
RFR	Controller enable
K1	Mains contactor
R	Resolver
RB	Brake resistor
Y	Motor holding brake (an optimum motor brake control)
①	Speed setpoint selection via analog input 1 (-10 ... 0 ... +10 V)
②	Voltage source for the motor holding brake
③	24-V voltage source for digital inputs according to IEC 61131-2
④	24-V voltage source for the control electronics

Design of the cables

- The cables used must comply with the approvals required for the location (e.g. UL).
- The cross-section of the PE conductor must be dimensioned according to the relevant national regulations.
- The effectiveness of a shielded cable is reached by:
  - Providing a good shield connection through large-surface shield contact.
  - Using only braided shields with low shield resistance made of tin-plated or nickel-plated copper braid.
  - Using braided shields with an overlap rate > 70 % and an overlap angle of 90 °.
  - Keeping unshielded cable ends as short as possible.

Use system cables or shielded cables for these connections:

- Motor
- Motor holding brake (shielding is required when being integrated into the motor cable; connection to optional motor brake control)
- Motor temperature monitoring
- External brake resistor (Mounting Instructions of the brake resistor)

The following connections need not be shielded:

- Mains
- DC bus, cable length up to 0.3 m

Mains

Terminal X100 (left part)	Labelling	Description
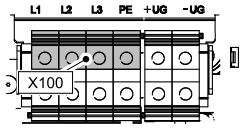 SSP94X6100	L1 L2 L3 PE	Connection of the mains phases L1, L2, L3 Connection for the PE conductor on the supply side

Terminal data					
	Max. conductor cross-section		Tightening torque		
	[mm²]	[AWG]	[Nm]	[lb-in]	
Device size 6: Flexible With wire end ferrule	50	0	10	88.5	Hexagon socket 5
Device size 7: Flexible With wire end ferrule	95	000	14	124	Hexagon socket 5

DC bus

Terminal X100 (right part)	Labelling	Description
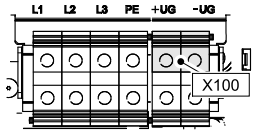 SSP94X6100	+UG -UG	Alternative option for DC-bus voltage connection (compatible to 9300 series).

Terminal data					
	Max. conductor cross-section		Tightening torque		
	[mm²]	[AWG]	[Nm]	[lb-in]	
Device size 6: Flexible With wire end ferrule	50	0	10	88.5	Hexagon socket 5
Device size 7: Flexible With wire end ferrule	95	000	14	124	Hexagon socket 5

External brake resistor

Terminal X105 (left part)	Labelling	Description
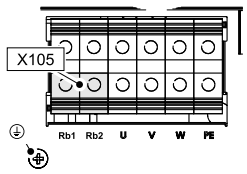 SSP94X6105	Rb1 Rb2 ⏚	External brake resistor Connection for the PE conductor with M5 ring cable lug

Terminal data					
	Max. conductor cross-section		Tightening torque		
	[mm²]	[AWG]	[Nm]	[lb-in]	
Device size 6: Flexible With wire end ferrule	50	0	10	88.5	Hexagon socket 5
Device size 7: Flexible With wire end ferrule	95	000	14	124	Hexagon socket 5

Motor

Terminal X105 (right part)	Labelling	Description
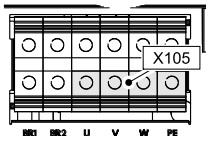 SSP94X6105	U V W PE	Motor phases Connection for the motor-side PE conductor

Terminal data					
	Max. conductor cross-section		Tightening torque		
	[mm²]	[AWG]	[Nm]	[lb-in]	
Device size 6: Flexible With wire end ferrule	50	0	10	88.5	Hexagon socket 5
Device size 7: Flexible With wire end ferrule	95	000	14	124	Hexagon socket 5

Motor temperature monitoring

Terminal X106	Labelling	Description
 SSP94X6106	T1 T2	Motor temperature monitoring with PTC element (type-A sensor, switching performance according to EN 60947-8 for type-A tripping units) or thermostat (NC contact).

Terminal data					
	Max. conductor cross-section		Tightening torque		
	[mm²]	[AWG]	[Nm]	[lb-in]	
flexible with wire end ferrule	2.5	12	0.5 ... 0.6	4.5 ... 5.3	Slot 0.6 x 3.5

Motor brake control (optional)

Note!

When the 24 V supply voltages (at X2) are applied and a motor holding brake is available, the devices respond as follows:

- ► Single Drive without mains or DC-bus voltage: The motor holding brake **cannot** be released.
- ► Multi Drive without DC-bus voltage: The motor holding brake can be released.

Tip!

For detailed information on the motor holding brake control modules, please see the chapter Accessories (📖 141).

For information on the E94AZHX0051 motor holding brake control module optionally contained in the installation backplane, please see the chapter Accessories starting on page 455.

Terminal X107	Labelling	Description
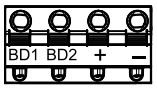 SSP94X6107	BD1 BD2	Connection of the motor holding brake + (Lenze: WH) - (Lenze: BN) E94AZHx0101: 24 V DC, max. 5.0 A Observe correct polarity!
	+ / -	Supply voltage for the motor holding brake (18 ... 30 V DC) Observe correct polarity!

Terminal data					
	Max. conductor cross-section		Tightening torque		
	[mm²]	[AWG]	[Nm]	[lb-in]	
flexible with wire end ferrule	2.5	12	0.5 ... 0.6	4.5 ... 5.3	Slot 0.6 x 3.5

Stripping length or contact length: 8 mm

3.7.6 Devices in the range 145 ... 245 A (75 ... 130 kW)

Example circuit

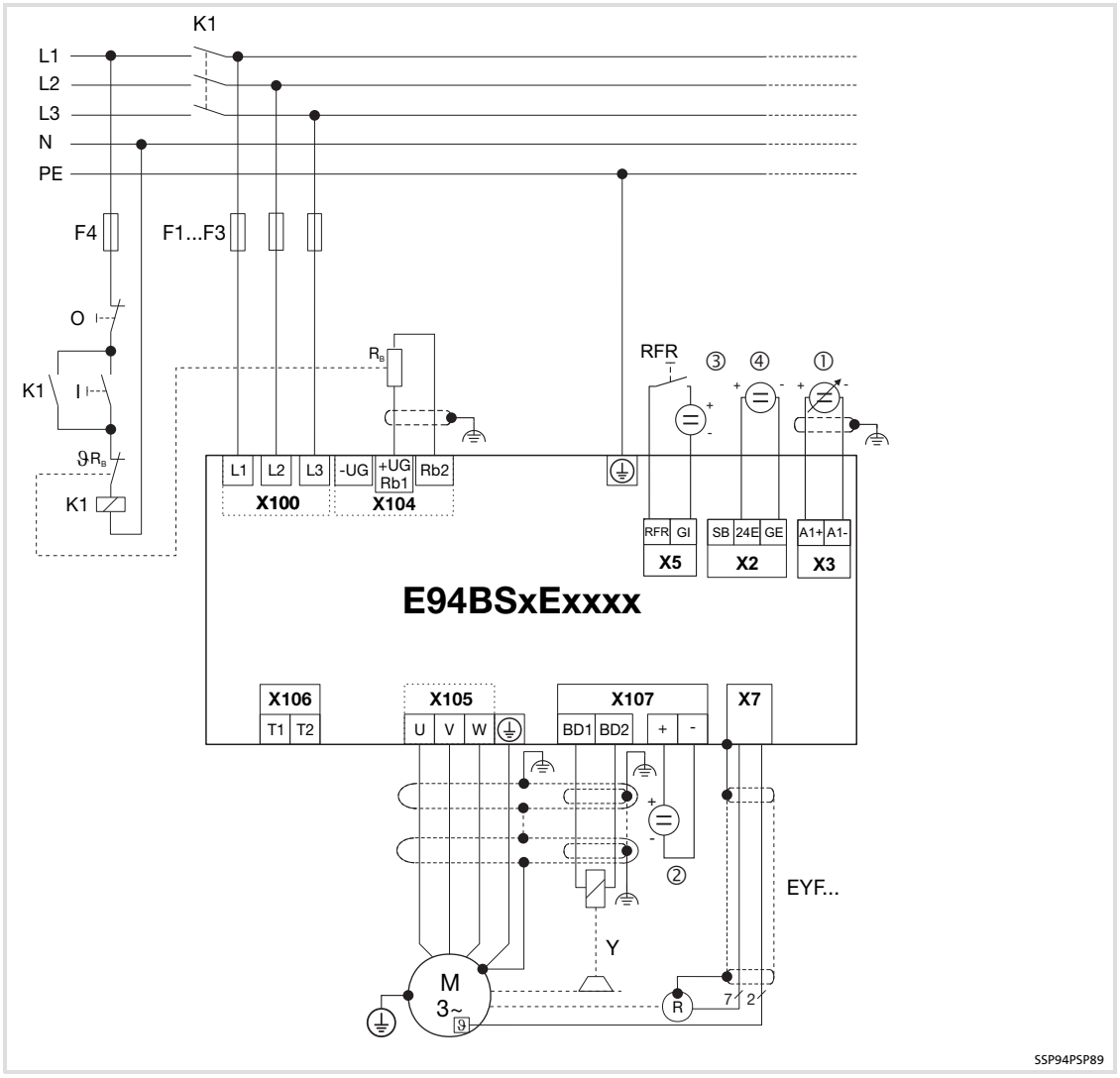

Fig. 3-25 Basic circuit diagram of the drive system

E94BSxExxxx	9400 Single Drive servo axis module
F1 ... F4	Fusing
⏚	HF-shield termination through large-surface connection to PE
EYF...	System cable for resolver feedback
RFR	Controller enable
K1	Mains contactor
R	Resolvers
RB	Brake resistor
Y	Motor holding brake
①	Speed setpoint selection via analog input 1 (-10 ... 0 ... +10 V)
②	Voltage source of the brake
③	24 V voltage source for the digital inputs according to IEC 61131-2
④	24 V voltage source for the control electronics

Design of the cables

- The cables used must comply with the approvals required for the location (e.g. UL).
- The cross-section of the PE conductor must be dimensioned according to the relevant national regulations.
- The effectiveness of a shielded cable is reached by:
  - Providing a good shield connection through large-surface shield contact.
  - Using only braided shields with low shield resistance made of tin-plated or nickel-plated copper braid.
  - Using braided shields with an overlap rate > 70 % and an overlap angle of 90 °.
  - Keeping unshielded cable ends as short as possible.

Use system cables or shielded cables for these connections:

- Motor
- Motor holding brake (shielding is required when being integrated into the motor cable; connection to optional motor brake control)
- Motor temperature monitoring
- External brake resistor (Mounting Instructions of the brake resistor)

The following connections need not be shielded:

- Mains
- DC bus, cable length up to 0.3 m

Arrangement of the connections

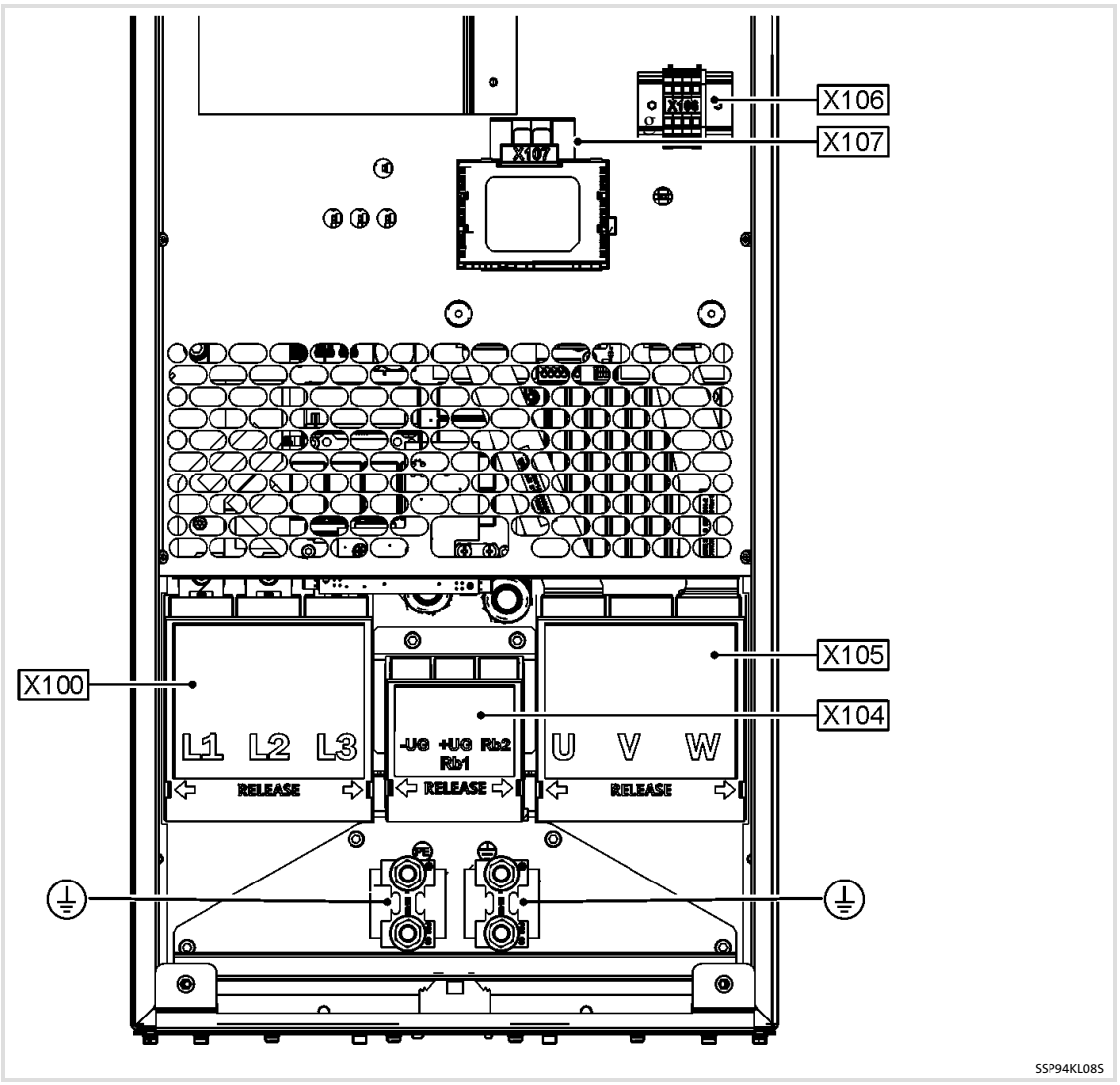

Fig. 3-26 Arrangement of the power connections

Mains

Terminal X100	Labelling	Description
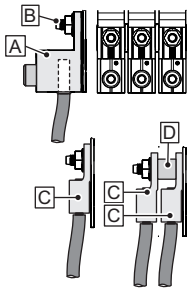 SSP94KLB	L1 L2 L3	Connection of the mains phases L1, L2, L3. A: Terminal (scope of supply); conductor connection with wire end ferrule B: Threaded bolt M10 (at the device) C: Ring cable lug for M10 (not included in the scope of supply) D: Sleeve (scope of supply) Wiring: **Standard:** With terminal A and wire end ferrule **Variant:** With ring cable lug C for threaded bolt M10 B (remove terminal A first). In case of a double assignment, use the sleeve D from the scope of supply.

Terminal data

	Max. conductor cross-section		Tightening torque		
	[mm²]	[AWG]	[Nm]	[lb-in]	
Terminal A					
Device size 81	150	300 mcm	42	375	Inbus 8
Device size 82	240	500 mcm	56	500	Inbus 10
Threaded bolt B	-	-	25	221	SW17

	Labelling	Description
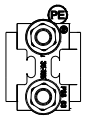 SSP94KL0X8	PE	Connection for the PE conductor on the supply side

Terminal data

	Max. conductor cross-section		Tightening torque		
	[mm²]	[AWG]	[Nm]	[lb-in]	
Terminal PE	70	2/0	10	88	SW13

DC bus and external brake resistor

Terminal X104	Labelling	Description
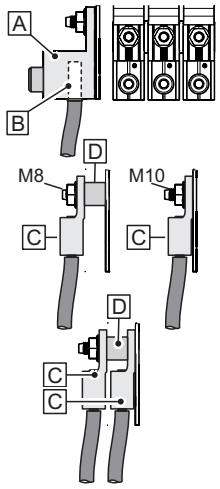	-UG +UG/Rb1 Rb2	Connection for DC-bus voltage and external brake resistor A: Terminal (scope of supply); conductor connection with wire end ferrule B: M8 threaded bolt (GG81)/M10 (GG82) C: Ring cable lug (not in the scope of supply) D: Sleeve (scope of supply) Wiring: **Standard:** With terminal Aand wire end ferrule **Variant 1: Single assignment**(First, removal terminal A) GG81: With M8 ring cable lug Cand sleeve D GG82: With M10 ring cable lug C(Sleeve Dnot necessary) **Variant 2: Double assignment**(First, remove terminal A) With two M10 ring cable lugs Cand sleeve D

Terminal data

	Max. conductor cross-section		Tightening torque		
	[mm²]	[AWG]	[Nm]	[lb-in]	
Terminal A	120	250 mcm	42	375	Inbus 8
Threaded bolt B	-	-	42	375	SW13

Motor

Terminal X105	Labelling	Description
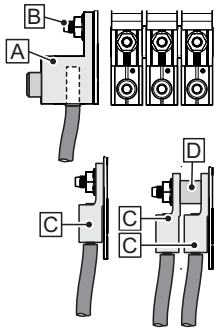 SSP94KLB	U V W	Connection of the motor phases U, V, W A: Terminal (scope of supply); conductor connection with wire end ferrule B: Threaded bolt M10 (at the device) C: Ring cable lug for M10 (not included in the scope of supply) D: Sleeve (scope of supply) Wiring: **Standard:** With terminal A and wire end ferrule **Variant:** With ring cable lug C for threaded bolt M10 B (remove terminal A first). In case of a double assignment, use the sleeve D from the scope of supply.

Terminal data

	Max. conductor cross-section		Tightening torque		
	[mm²]	[AWG]	[Nm]	[lb-in]	
Terminal A					
Device size 81	150	300 mcm	42	375	Inbus 8
Device size 82	240	500 mcm	56	500	Inbus 10
Threaded bolt B	-	-	25	221	SW17

	Labelling	Description
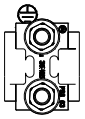 SSP94KL0X8	⏚	Connection for the PE conductor on the motor side with wire end ferrule

Terminal data

	Max. conductor cross-section		Tightening torque		
	[mm²]	[AWG]	[Nm]	[lb-in]	
Terminal PE	70	2/0	10	88	SW13

Motor temperature monitoring

Terminal X106	Labelling	Description
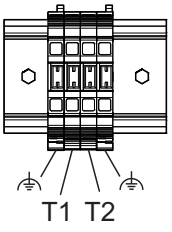 SSP94KL0X8	T1 T2	Motor temperature monitoring with PTC element (type-A sensor, switching performance according to EN 60947-8 for type-A tripping units) or thermostat (NC contact).
	⏚	Shield connection

Terminal data					
	Max. conductor cross-section		Tightening torque		
	[mm²]	[AWG]	[Nm]	[lb-in]	
flexible with wire end ferrule	2.5	12	0.5 ... 0.6	4.5 ... 5.3	Slot 0.6 x 3.5

Motor brake control (optional)

Note!

When the 24 V supply voltages (at X2) are applied and a motor holding brake is available, the devices respond as follows:

- ► Single Drive without mains or DC-bus voltage: The motor holding brake **cannot** be released.
- ► Multi Drive without DC-bus voltage: The motor holding brake can be released.

Tip!

For detailed information on the motor holding brake control modules, please see the chapter Accessories (📖 141).

For information on the E94AZHX0051 motor holding brake control module optionally contained in the installation backplane, please see the chapter Accessories starting on page 455.

Terminal X107	Labelling	Description
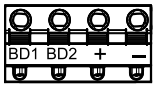 SSP94X6107	BD1 BD2	Connection of the motor holding brake + (Lenze: WH) - (Lenze: BN) E94AZHx0101: 24 V DC, max. 5.0 A Observe correct polarity!
	+ / -	Supply voltage for the motor holding brake (18 ... 30 V DC) Observe correct polarity!

Terminal data					
	Max. conductor cross-section		Tightening torque		
	[mm²]	[AWG]	[Nm]	[lb-in]	
flexible with wire end ferrule	2.5	12	0.5 ... 0.6	4.5 ... 5.3	Slot 0.6 x 3.5

Stripping length or contact length: 8 mm

3.7.7 Device 292 A (150 kW)

Arrangement of the connections

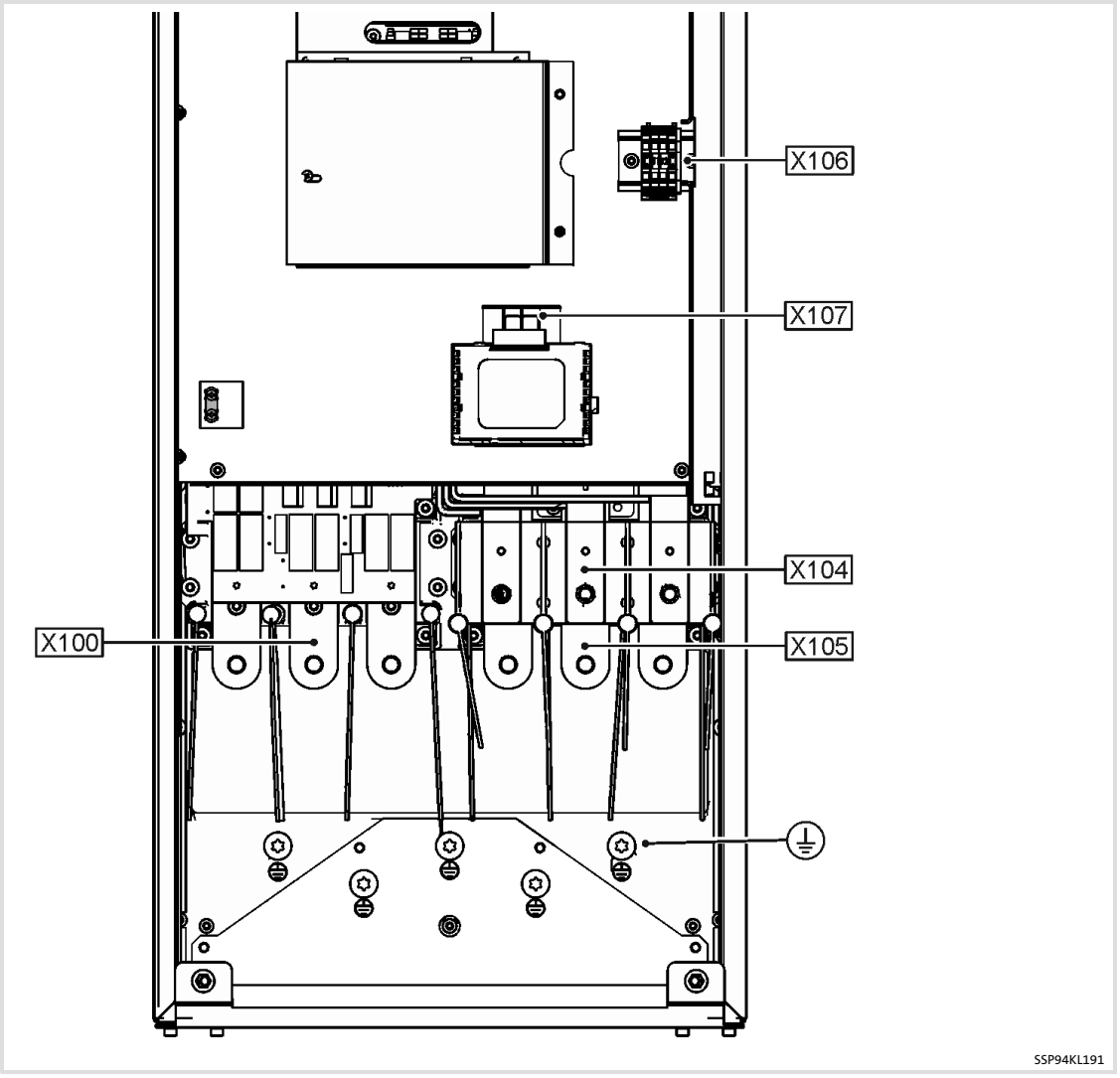

Fig. 3-27 Arrangement of the power connections

Mains

Terminal X100	Labelling	Description
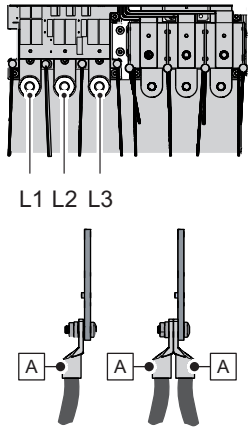	L1 L2 L3	Connection of phases L1, L2, L3 with ring cable lug for M10 (A).

Terminal data

	Max. conductor cross-section		Tightening torque		
	[mm²]	[AWG]	[Nm]	[lb-in]	
L1, L2, L3, flexible	240	500 mcm	47	416	SW17

	Labelling	Description
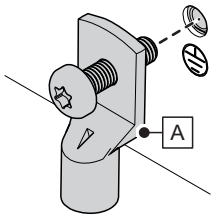	⏚	Connection for protective conductor (PE) with ring cable lug for M8 (A).

Terminal data

	Max. conductor cross-section		Tightening torque		
	[mm²]	[AWG]	[Nm]	[lb-in]	
⏚	-	-	8	71	-

DC bus and external brake resistor

Terminal X104	Labelling	Description
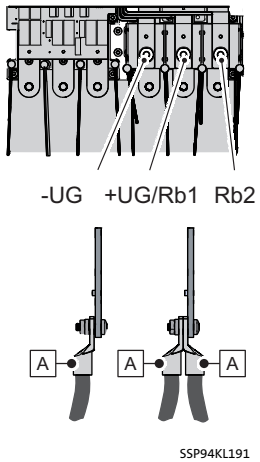	-UG +UG/Rb1 Rb2	Connection for DC-bus voltage and external brake resistor with ring cable lug for M8 (A).

Terminal data					
	Max. conductor cross-section		Tightening torque		
	[mm²]	[AWG]	[Nm]	[lb-in]	
flexible	185	350 mcm	24	212	SW13

Motor

Terminal X105	Labelling	Description
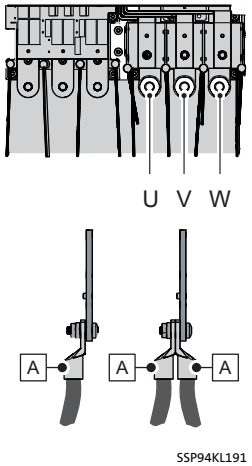	U V W	Connection of phases U, V, W with ring cable lug for M10 (A).

Terminal data

	Max. conductor cross-section		Tightening torque		
	[mm²]	[AWG]	[Nm]	[lb-in]	
U, V, W, flexible	240	500 mcm	47	416	SW17

	Labelling	Description
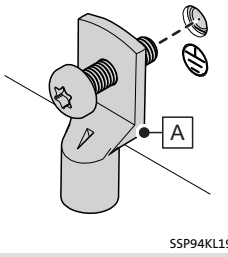	⏚	Connection for protective conductor (PE) with ring cable lug for M8 (A).

Terminal data

	Max. conductor cross-section		Tightening torque		
	[mm²]	[AWG]	[Nm]	[lb-in]	
⏚	-	-	8	71	-

Motor temperature monitoring

Terminal X106	Labelling	Description
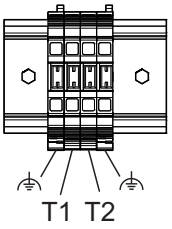 SSP94KL0X8	T1 T2	Motor temperature monitoring with PTC element (type-A sensor, switching performance according to EN 60947-8 for type-A tripping units) or thermostat (NC contact).
	⏚	Shield connection

Terminal data					
	Max. conductor cross-section		Tightening torque		
	[mm²]	[AWG]	[Nm]	[lb-in]	
flexible with wire end ferrule	2.5	12	0.5 ... 0.6	4.5 ... 5.3	Slot 0.6 x 3.5

Motor brake control (optional)

Note!

The motor holding brake **cannot** be released without mains or DC-bus voltage.

Terminal X107	Labelling	Description
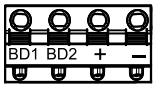 SSP94X6107	BD1 BD2	Connection of the motor holding brake + (Lenze: WH) - (Lenze: BN) E94AZHx0101: 24 V DC, max. 5.0 A Observe correct polarity!
	+ / -	Supply voltage for the motor holding brake (18 ... 30 V DC) Observe correct polarity!

Terminal data					
	Max. conductor cross-section		Tightening torque		
	[mm²]	[AWG]	[Nm]	[lb-in]	
flexible with wire end ferrule	2.5	12	0.5 ... 0.6	4.5 ... 5.3	Slot 0.6 x 3.5

Stripping length or contact length: 8 mm

The motor brake control modules differ in the following features:

- Rated voltage
- Device size assignment
- Mounting type

The table shows the module/controller assignments according to the features listed.

Single-axis controllers		Rated voltage of motor holding brake (control module)		
Type		24 V	205 V	180 V
E94BSxE1454 ... E94BSxE4604	GG81 ... GG91	E94AZHY0101 ② ③ E94AZHB0101 ② ④	E94AZHN0025 ④ ⑤ E94AZHY0025 ② ③	E94AZHN0026 ④ ⑤ E94AZHY0026 ② ③

Tab. 3-6 Motor holding brake/control module assignment

GGx Device size
① integrated in the installation backplane, already used or retrofittable
② integrated in the device, already applied or retrofittable (recommended variant for the same rated voltage)
③ integrated control module (automatic brake operation can be activated)
④ external control (via digital output/digital input)
⑤ external mounting (DIN rail or mounting plate)

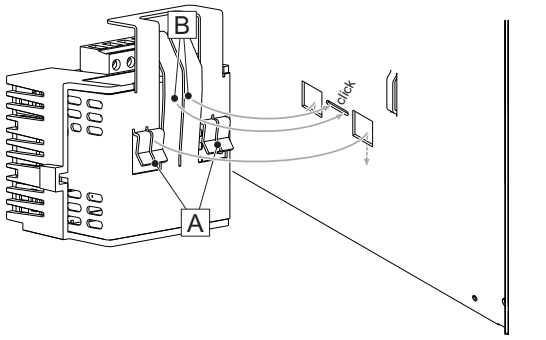

Mounting of motor brake control module

1. Insert motor brake control module with both clips A into the openings of the basic device and press downwards until the two detents B engage audibly.
2. Check that the motor brake control module is securely connected.

3.7.8 Devices in the range 366 ... 460 A (190 ... 240 kW)

Example circuit

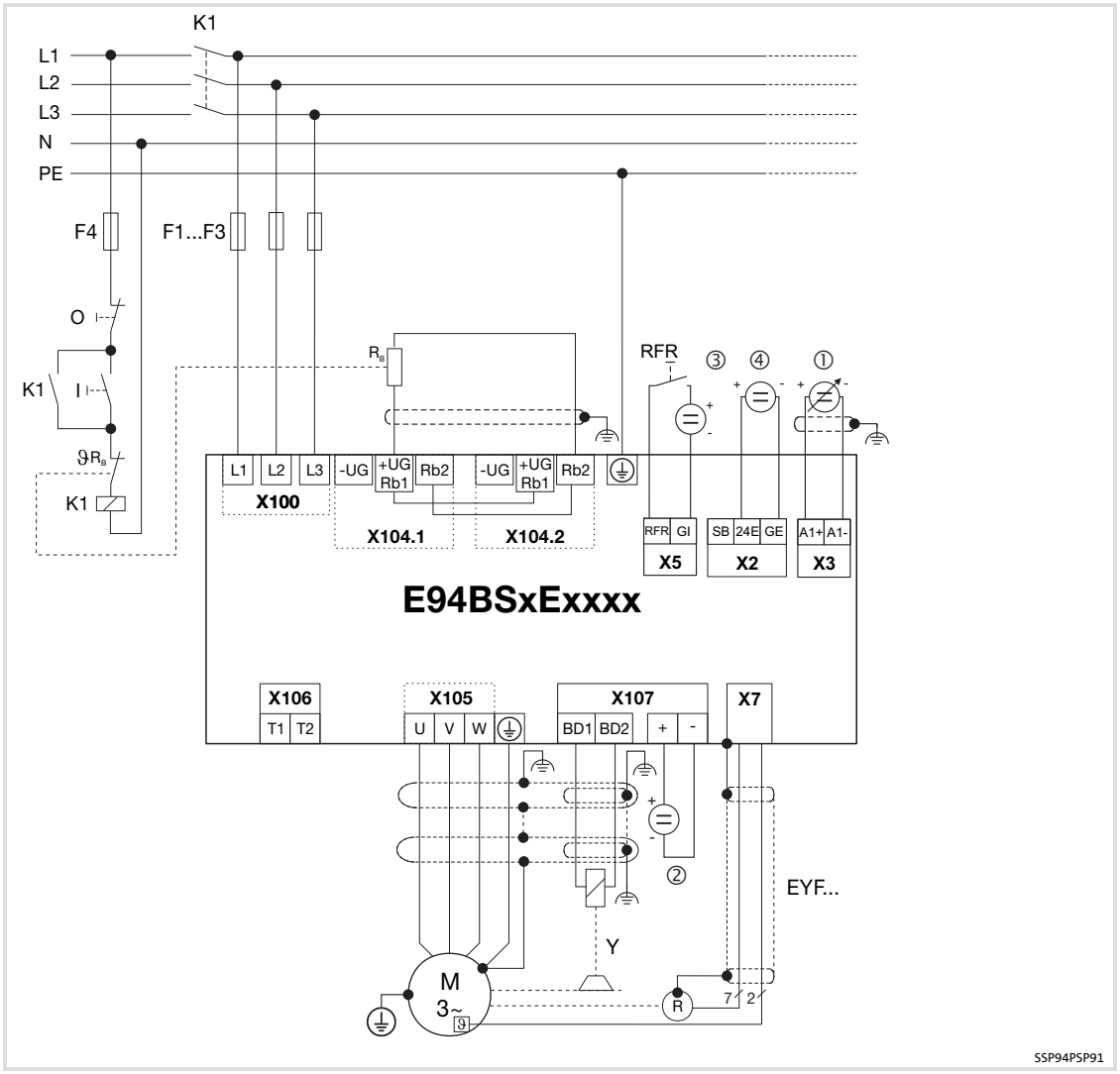

Fig. 3-28 Basic circuit diagram of the drive system

E94BSxExxxx	9400 Single Drive servo axis module
F1 ... F4	Fusing
⏚	HF-shield termination through large-surface connection to PE
EYF...	System cable for resolver feedback
RFR	Controller enable
K1	Mains contactor
R	Resolvers
RB	Brake resistor
Y	Motor holding brake
①	Speed setpoint selection via analog input 1 (-10 ... 0 ... +10 V)
②	Voltage source of the brake
③	24 V voltage source for the digital inputs according to IEC 61131-2
④	24 V voltage source for the control electronics

Note!

If you use the DC bus differently, please consult Lenze.

Design of the cables

- The cables used must comply with the approvals required for the location (e.g. UL).
- The cross-section of the PE conductor must be dimensioned according to the relevant national regulations.
- The effectiveness of a shielded cable is reached by:
  - Providing a good shield connection through large-surface shield contact.
  - Using only braided shields with low shield resistance made of tin-plated or nickel-plated copper braid.
  - Using braided shields with an overlap rate > 70 % and an overlap angle of 90 °.
  - Keeping unshielded cable ends as short as possible.

Use system cables or shielded cables for these connections:

- Motor
- Motor holding brake (shielding is required when being integrated into the motor cable; connection to optional motor brake control)
- Motor temperature monitoring
- External brake resistor (Mounting Instructions of the brake resistor)

The following connections need not be shielded:

- Mains
- DC bus, cable length up to 0.3 m

Arrangement of the connections

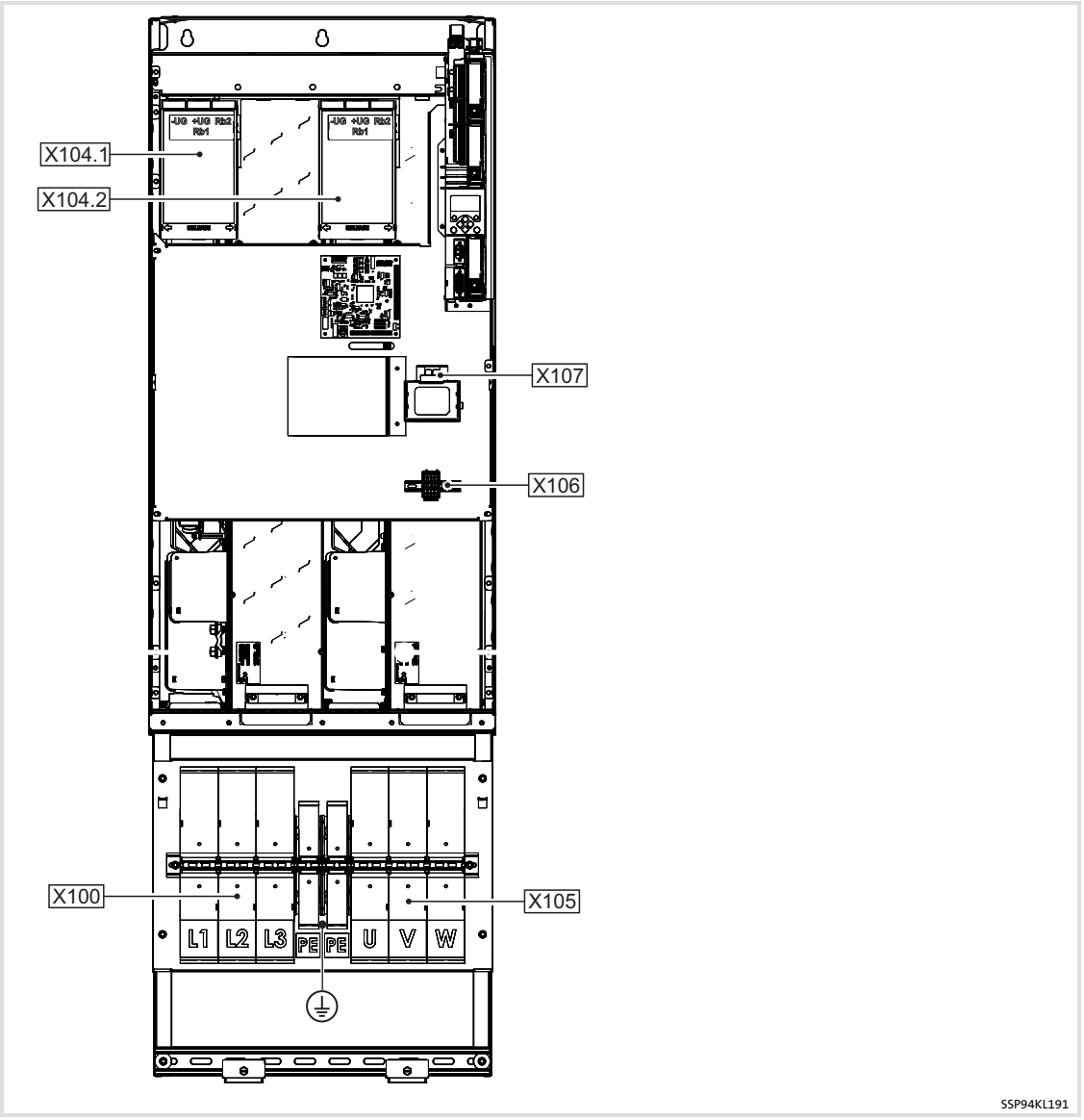

Fig. 3-29 Arrangement of the power connections

Mains

Terminal X100	Labelling	Description
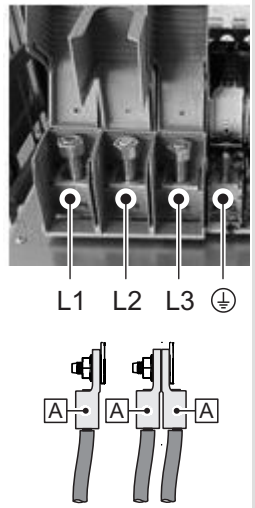	L1 L2 L3 ⏚	Connection of the phases L1, L2, L3 with ring cable lug for M16 (A). Connection for the PE conductor on the supply side with ring cable lug for M10 (A).

Note!
For mounting the cables, you need an extra large spanner socket.

Terminal data					
	Max. conductor cross-section		Tightening torque		
	[mm²]	[AWG]	[Nm]	[lb-in]	
U, V, W, flexible	300	600 mcm	35	315	SW24
⏚	150	300 mcm	20	180	SW17

DC bus and external brake resistor

Terminal X104.1/X104.2	Labelling	Description
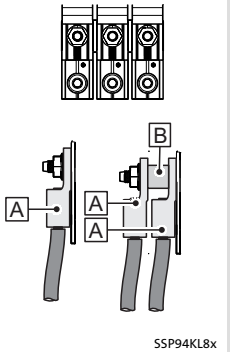	+UG/Rb1 -UG Rb2	Connection of DC-bus voltage and external brake resistor with ring cable lug M10 (A). In case of double assignment, use sleeve Bfrom the scope of supply.

Terminal data					
	Max. conductor cross-section		Tightening torque		
	[mm²]	[AWG]	[Nm]	[lb-in]	
flexible	2 x 240	2 x 500 mcm	56	500	Inbus 10 or SW17

Motor

Terminal X105	Labelling	Description
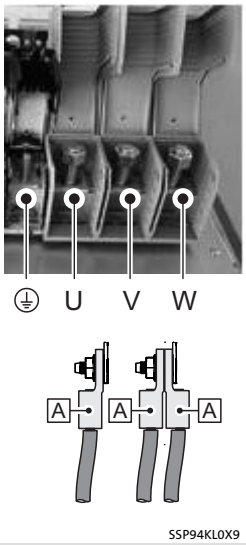	U V W ⏚	Connection of the phases U, V, W with ring cable lug for M16 (A). Connection for the PE conductor on the motor side with ring cable lug for M10 (A).

Note!
For mounting the cables, you need an extra large spanner socket.

Terminal data					
	Max. conductor cross-section		Tightening torque		
	[mm²]	[AWG]	[Nm]	[lb-in]	
U, V, W, flexible	300	600 mcm	35	315	SW24
⏚	150	300 mcm	20	180	SW17

Motor temperature monitoring

Terminal X106	Labelling	Description
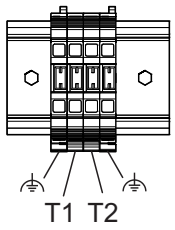	T1 T2	Motor temperature monitoring with PTC element (type-A sensor, switching performance according to EN 60947-8 for type-A tripping units) or thermostat (NC contact).
	⏚	Shield connection

Terminal data					
	Max. conductor cross-section		Tightening torque		
	[mm²]	[AWG]	[Nm]	[lb-in]	
flexible with wire end ferrule	2.5	12	0.5 ... 0.6	4.5 ... 5.3	Slot 0.6 x 3.5

Motor brake control (optional)

Note!

When the 24 V supply voltages (at X2) are applied and a motor holding brake is available, the devices respond as follows:

- ► Single Drive without mains or DC-bus voltage: The motor holding brake **cannot** be released.
- ► Multi Drive without DC-bus voltage: The motor holding brake can be released.

Tip!

For detailed information on the motor holding brake control modules, please see the chapter Accessories (📖 141).

For information on the E94AZHX0051 motor holding brake control module optionally contained in the installation backplane, please see the chapter Accessories starting on page 455.

Terminal X107	Labelling	Description
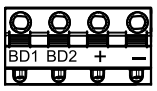 SSP94X6107	BD1 BD2	Connection of the motor holding brake + (Lenze: WH) - (Lenze: BN) E94AZHx0101: 24 V DC, max. 5.0 A Observe correct polarity!
	+ / -	Supply voltage for the motor holding brake (18 ... 30 V DC) Observe correct polarity!

Terminal data

	Max. conductor cross-section		Tightening torque		
	[mm²]	[AWG]	[Nm]	[lb-in]	
flexible with wire end ferrule	2.5	12	0.5 ... 0.6	4.5 ... 5.3	Slot 0.6 x 3.5

Stripping length or contact length: 8 mm

3.8 Control terminals



Danger!

Hazardous electrical voltage

All power connections carry a hazardous electrical voltage for a longer time after mains disconnection. Observe the information regarding the discharge time on the device.

Possible consequences:

► Death or severe injuries when touching the power terminals.

Protective measures:

► Before working on the power connections, wait at least until the discharge time has passed (depending on the device, this may be up to 30 minutes).

► Make sure that all power terminals are deenergised.



Stop!

The device contains components that can be destroyed by electrostatic discharge!

Before working on the device, the personnel must ensure that they are free of electrostatic charge by using appropriate measures.



Tip!

Parameter setting and configuration can be carried out using the L-force »Engineer«. For this purpose the Online Help and the Software Manual for the standard device will guide you.

Design of the cables

- The cables used must comply with the approvals required for the location (e.g. UL).
- The effectiveness of a shielded cable is reached by:
  - Providing a good shield connection through large-surface shield contact.
  - Using only braided shields with low shield resistance made of tin-plated or nickel-plated copper braid.
  - Using braided shields with an overlap rate > 70 % and an overlap angle of 90 °.
  - Keeping unshielded cable ends as short as possible.

Use system cables or shielded cables for these connections:

- Analog signals (inputs and outputs)
- System bus CAN
- Resolver
- Encoder

The following connections need not be shielded:

- 24 V supply
- Digital signals (inputs and outputs)

System bus CAN on board

The drive controller has an integrated CANopen system bus interface for the exchange of process data and parameter values between different nodes and for the connection of additional modules such as distributed terminals, operator and input devices (”HMIs”) as well as external control units. The software manual contains additional information in this regard.

Overview of general data and conditions of use	
Field	**Values**
Communication profile	CANopen (DS301, V4.02)
Communication medium	CAN cable in accordance with ISO 11898-2
Network topology	Line closed at both ends (e.g. closed with Lenze system connector EWZ0046)
Node addresses that can be set	1 ... 127 (can be set by means of DIP switch or code)
Max. number of nodes	127
Transfer rates [kBit/s]	10 ... 1000 (can be set by means of DIP switch or code)
Conformity, approvals	• CE • UL • EAC

The transfer rate limits the overall cable length.

Transfer rate [kBit]	Maximum bus length [m]
10	8075
20	4012
50	1575
125	600
250	275
500	112
800	38
1000	12

The segment cable length is limited by the cable cross-section used and the number of nodes. Repeaters divide the overall cable length into segments. Without repeaters, the segment cable length is the same as the overall cable length.

Max. number of nodes per segment	**Segment length [m] in relation to cable cross-section** (Interpolation is permissible)			
	0.25 mm² (AWG 24)	0.50 mm² (AWG 21)	0.75 mm² (AWG 19)	1.00 mm² (AWG 18)
2	240	430	650	940
5	230	420	640	920
10	230	410	620	900
20	210	390	580	850
32	200	360	550	800
63	170	310	470	690
100	150	270	410	600

Terminal X1	Labelling	Description
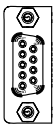 9400SSP000X1	Pin 2	CAN-LOW
	Pin 3	CAN-GND
	Pin 7	CAN-HIGH
	(Housing)	CAN-Shield

24 V supply

The supply voltage for the control electronics should be fed by a mains-independent 24 V source. Thus, the control functions remain active even after power is removed.
As an option, the controller can generate the supply voltage for the control electronics from the DC-bus voltage. Then, the control functions will not be active when power is removed.

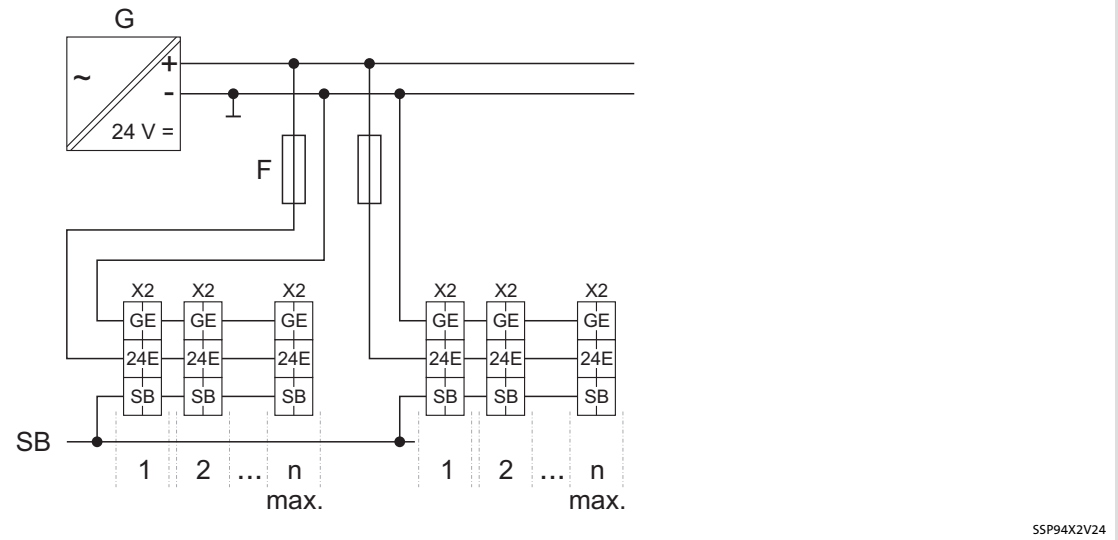

Fig. 3-30 Wiring principle

g	24 V external supply (e.g. EZV...)
F	Fuse
X2	Terminal for 24 V and state bus
GE/24E/SB	Labelling on the terminal
SB	State bus
1 ... n	E94x... device number during loop-through connection

Terminal X2	Labelling	Description
 9400SSP000X2	GE	GND external supply
	24E	24 V external supply via a safely separated power supply unit (SELV/PELV) (only required for mains-independent supply of the control electronics)
	SB	State bus in/out (reference GE)

Terminal data				
	Conductor cross-section		Tightening torque	
	[mm²]	[AWG]	[Nm]	[lb-in]
Flexible	0.2 ... 2.5	24 ... 12	Spring terminal	
With wire end ferrule				

Electrical data		
24 V	Rated voltage	24 V According to IEC 61131-2
	Voltage range	19.2 ... 28.8 V Residual ripple max. ± 5 %
	Current consumption	Approx. 1.2 A during operation Max. 3 A starting current for 100 ms
	Fuse	Circuit breaker with tripping characteristic B or C, Standard blade-type fuses
	Looping through	Max. 12 devices with 2.5 mm² Fusing: 16/15 A
		Max. 8 devices with 1.5 mm² Fusing: 10/10 A
	Connectable cross-cuttings	See terminal data

State bus

The state bus is a bus system exclusively designed for Lenze controllers via which up to 20 controllers can be connected and which serves to simulate a ”release cord” function. The state is controlled via the system module SFBDigitalOutput.

- The state bus knows the states ”OK” and ”fault”.
- The state bus is multi-master-compliant, i.e. each node connected to the state bus can set the state bus to ”fault” by changing to LOW level.
- In the ”fault” status, all nodes activate their programmed response, e.g. synchronised braking of the drive system.



Stop!

Do not connect an external voltage to the state bus, otherwise the function will be disturbed.

Electrical data		
State bus	Rated voltage	24 V According to IEC 61131-2
	Switching level	According to IEC 61131-2
	LOW	0 V ... +5 V
	HIGH	+15 V ... +30 V
	Looping through	Max. 20 devices DC-bus operation with 9300 devices is possible.
	Connectable cross-cuttings	See terminal data

Analog inputs, analog outputs

The controller features two analog inputs which are able to detect differential voltage signals in the range ±10 V, e.g. an analog speed setpoint selection or the voltage signal of an external sensor (temperature, pressure, etc.).

► The analog signal 1 can also detect a current setpoint.

The controller features two analog outputs, which can output internal analog signals as voltage signals, e.g. for the control of analog indicating instruments or as a setpoint for slave drives.

Electrical data		
Analog input 1 Analog input 2	Level:	-10 ... +10 V
	Resolution:	11 bits + sign
	Scaling:	±10 V ≡ $\pm 2^{30}$
	Conversion rate:	1 kHz
Analog input 1 as current input (A1R and A1- bridged)	Level:	-20 ... +20 mA
	Resolution:	10 bits + sign
	Scaling:	For C00034 = ”1” -20 ... -4 mA ≡-2^{30} ... 0 +4 ... +20 mA ≡0 ... $+2^{30}$
		For C00034 = ”2” ±20 mA ≡ $\pm 2^{30}$
	Conversion rate:	1 kHz
	Open-circuit monitoring:	Configurable
Analog output 1 Analog output 2	Level:	-10 ... +10 V (max. 2 mA)
	Resolution:	11 bits + sign
	Scaling:	±10 V ≡ $\pm 2^{30}$
	Conversion rate:	1 kHz

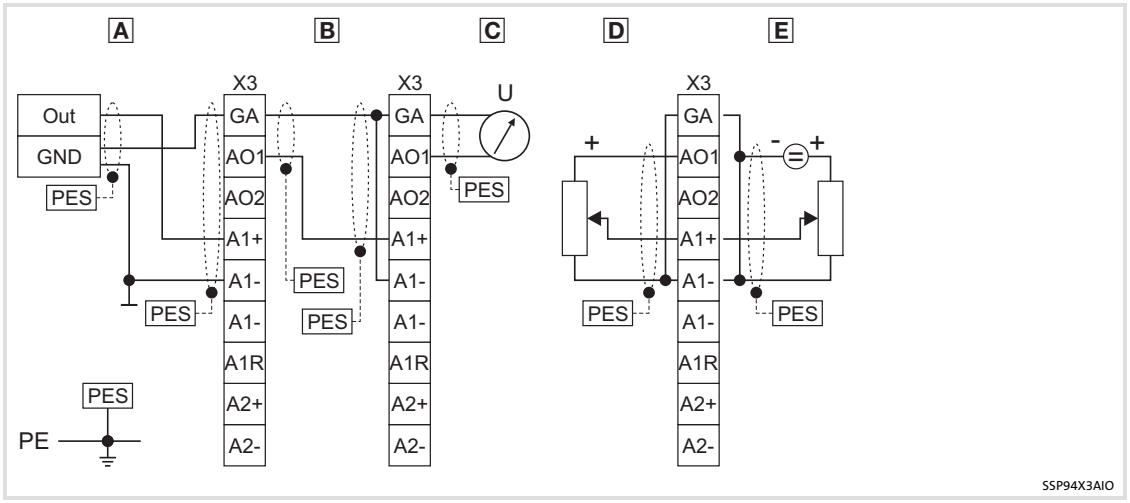

Fig. 3-31 Wiring principle

A	Wiring of an external analog signal
B	Wiring with a slave drive
C	Wiring with a measuring device
D	Potentiometer supplied by analog output 1
E	Potentiometer with external supply
Out	Analog output signal, e.g. of a control
GND	Earth reference potential
X3	Terminal for the analog inputs and outputs
PES	EMC shield connection
PE	Protective earth
U	Measuring device

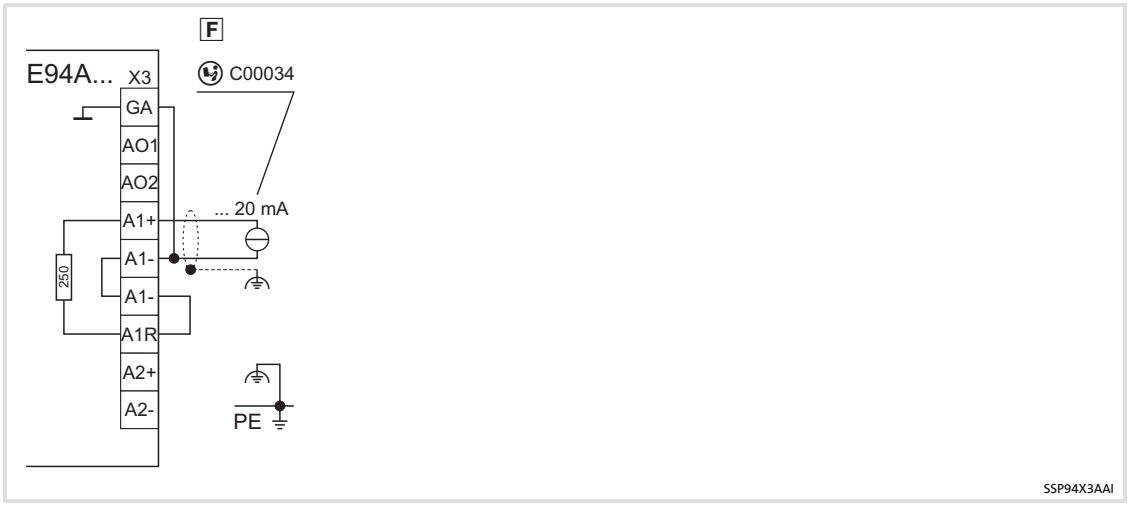

Fig. 3-32 Wiring principle of current input

F Wiring of a current signal
X3 Terminal for the analog inputs and outputs
Read information on the input configuration (software manual)
Functional earth
PE Protective earth

Terminal X3	Labelling	Description
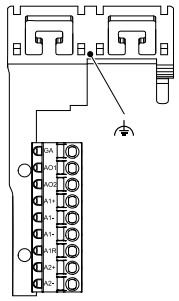 SSP94000X3	GA	GND analog signals
	AO1	Analog output 1
	AO2	Analog output 2
	A1+	Analog input 1 +
	A1-	Analog input 1 -
	A1-	Analog input 1 -
	A1R	Terminating resistor for ±20mA
	A2+	Analog input 2 +
	A2-	Analog input 2 -
	⏚	Shield connection: Fix the shield with EMC wire clamp.

Terminal data				
	Conductor cross-section		Tightening torque	
	[mm²]	[AWG]	[Nm]	[lb-in]
Flexible	0.2 ... 2.5	24 ... 12	Spring terminal	
With wire end ferrule				

Note!

If the control terminals are completely wired, we recommend to use a cable cross-section of max. 0.75 mm² to save space. The mechanical cover can then be attached.

Digital outputs

The controller features four freely configurable digital outputs.

Electrical data			
24O GO	24 V external voltage source, optional		according to IEC 61131-2 SELV/PELV
	Current consumption		Max. 300 mA
DO1 ... DO4 GO	Switching level		according to IEC 61131-2
		LOW	0 V ... +5 V
		HIGH	+15 V ... +30 V
	Output current		Max. 50 mA
	Load		> 480 Ω at 24 V

Note!

For stable digital output states, in particular during the starting phase of the controller, you must use an external 24V supply for the digital outputs.

Note!

Digital inputs and digital outputs have separated reference potentials (GI and GO). If you interconnect inputs and outputs, the reference potentials are connected as well by an external bridge.

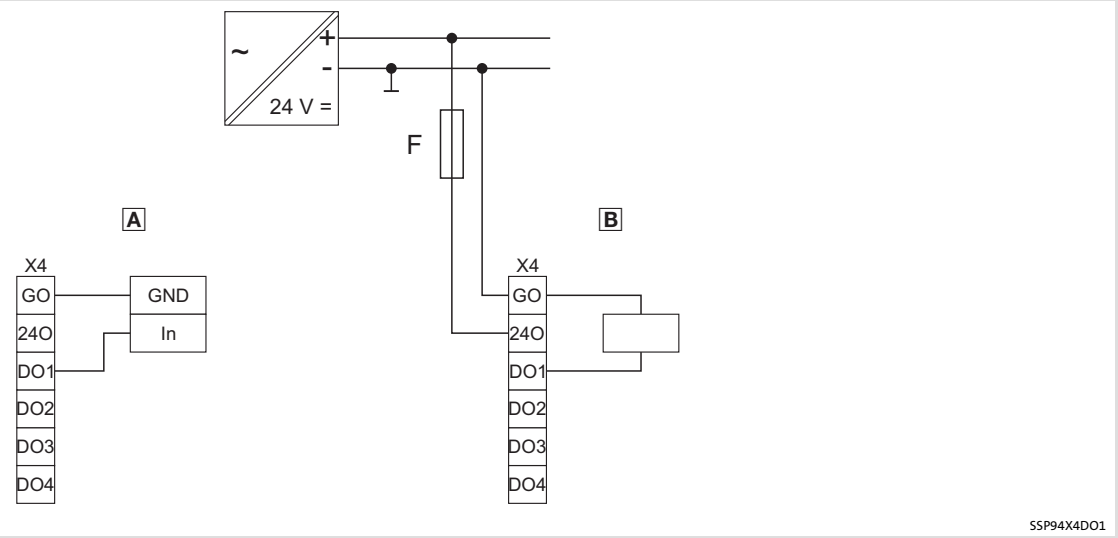

Fig. 3-33 Wiring principle

A	Wiring with a digital input, e.g. a PLC
B	Digital control (relay, valve, ...) with an external 24-V supply
X4	Terminal for the digital outputs
In	Digital input, e.g. of a control
GND	Earth reference potential
F	Fuse

Terminal X4	Labelling	Description
	GO	GND digital out
	24O	24-V digital out
	DO1	Digital output 1
	DO2	Digital output 2
	DO3	Digital output 3
9400SSP000X4	DO4	Digital output 4

Terminal data				
	Conductor cross-section		Tightening torque	
	[mm²]	[AWG]	[Nm]	[lb-in]
Flexible	0.2 ... 2.5	24 ... 12	Spring terminal	
With wire end ferrule				

Digital inputs

The controller is provided with freely configurable digital inputs which can be used for touch probe measurement (edge-controlled event).

The control input RFR for controller enable is firmly connected with the device control. It must be wired to enable the controller with a HIGH signal.

Electrical data		
24O (external voltage source, optional)	Rated voltage	24 V According to IEC 61131-2
	Current consumption	Max. 50 mA
RFR DI1 ... DI8	Switching level	According to IEC 61131-2
	LOW	0 V ... +5 V
	HIGH	+15 V ... +30 V
	Input current	Max. 8 mA

Note!

Digital inputs and digital outputs have separated reference potentials (GI and GO). If you interconnect inputs and outputs, the reference potentials are connected as well by an external bridge.

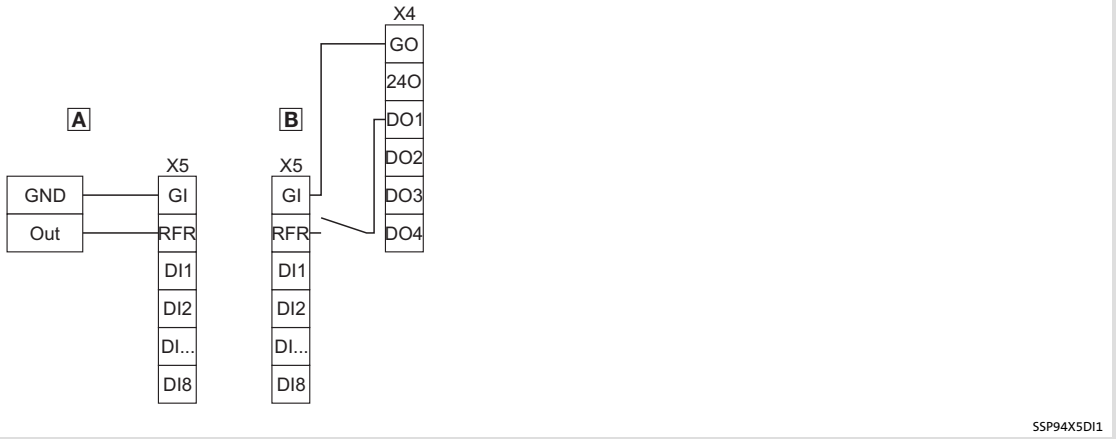

Fig. 3-34 Wiring principle

A	Wiring of an external digital signal, e.g. a PLC
B	Wiring with a slave drive
X4	Terminal for the digital outputs
X5	Terminal for the digital inputs
Out	digital output signal, e.g. of a control
GND	Earth reference potential

Terminal X5	Labelling	Description
 9400SSP000X5	GI	GND digital in
	RFR	Controller enable
	DI1	Digital input 1
	DI2	Digital input 2
	DI3	Digital input 3
	DI4	Digital input 4
	DI5	Digital input 5
	DI6	Digital input 6
	DI7	Digital input 7
	DI8	Digital input 8

Terminal data				
	Conductor cross-section		Tightening torque	
	[mm²]	[AWG]	[Nm]	[lb-in]
Flexible	0.2 ... 2.5	24 ... 12	Spring terminal	
With wire end ferrule				

Diagnostics/keypad

The following can be connected to this interface:

► USB diagnostic adapter E94AZCUS

or

► Keypad E94AZKAE.

The diagnostic adapter and a computer with the Lenze software »Engineer« serve to carry out comprehensive settings, e.g. for initial commissioning.

The keypad enables experienced users to check or change individual settings.

Terminal X6	Labelling	Description
 9400SSP000X6		Internal interface, RJ69 socket, for keypad or diagnostic adapter

Resolver

Resolvers are connected to X7 (9-pole Sub-D socket).

The use of third-party resolvers is permissible. For this purpose the number of pole pairs of the resolver in C00080 must be adapted to the resolver used. When the stator coils are excited with 4 kHz, the apparent impedance of the connected resolver must not fall below 65 Ohm. When lower impedances are connected, the overload protection integrated in the resolver output limits the output current and can falsify the resolver evaluation.

Resolvers are operated in reverse mode:

- Supply to the sine and cosine track,
- Both signals are controlled in a way that the current flow on the reference track is reduced to zero.

Electrical data		
General	Cable length (system cable recommended)	max. 150 m (100 m [1])
V_{CC}, -KTY (GND)	Supply voltage	5 V
	Maximum output current	110 mA
+REF, -REF	Input frequency	Max. 250 kHz
+COS, -COS +SIN, -SIN	Excitation voltage	10 V_{SS}
	Carrier frequency	4 kHz, fix
+KTY, -KTY	Type	KTY 83-110

[1] If safety functions with SM301 are used which require safe speed and position detection.

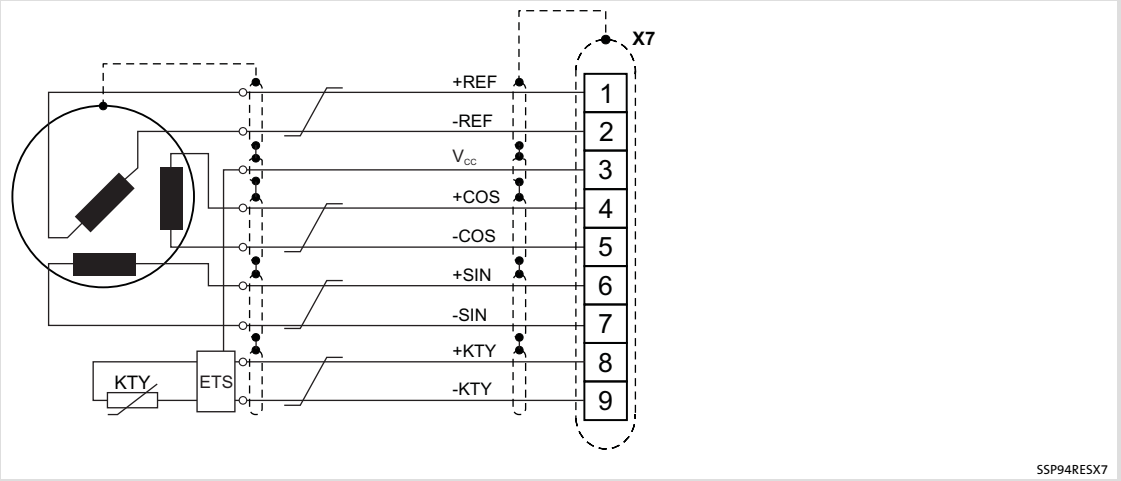

Fig. 3-35 Wiring principle

Terminal X7	Labelling	Description
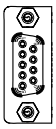	1	+REF
	2	-REF
	3	V_{CC}
	4	+COS
	5	-COS
	6	+SIN
	7	-SIN
	8	+KTY
9400SSP000X7	9	-KTY

Encoder

Encoders are connected to X8 (15-pole Sub-D socket).

- Absolute and incremental encoders are supported:
  - TTL encoder 5 V (incremental)
  - Sin/cos encoder 1 V_{ss} (incremental)
  - Sin/cos absolute value encoder 1 V_{ss} with Hiperface protocol
  - Sin/cos absolute value encoder 1 V_{ss} with EnDat protocol (2.1)
  - SSI load encoder with Stegmann protocol (as of 9400 with firmware 05.00)
- Improved determination of low speeds with TTL encoders through additional time measuring method.
- SinCos absolute value encoders are serially read during initialisation (power-on). After this, the sin/cos signals are evaluated.
- Open-circuit monitoring:
  - for sin/cos encoders by comparing the sin/cos signals with the sine shape (radius monitoring)
  - for TTL encoders by means of mean value and amplitude monitoring
  - not with SSI encoders
- The following encoders are not supported:
  - HTL encoders

Electrical data			
General	Cable length (system cable recommended)		max. 150 m (100 m [1])
	Encoder types		TTL 1 V_{SS}
	Protocols		Hiperface EnDat 2.1 SSI-Stegmann
	Number of increments		1 ... 16384
	Input frequency		max. 500 kHz
VCC (GND)	Supply voltage		5 V ... 12 V
	Max. load capacity,	5 ... 9 V	330 mA
		9 ... 12 V	3 W
		at 12 V	250 mA
+Sense, -Sense	Measuring lead for readjusting V_{CC}		
+KTY, -KTY	Type		KTY 83-110

[1] If safety functions with SM301 are used which require safe speed and position detection.

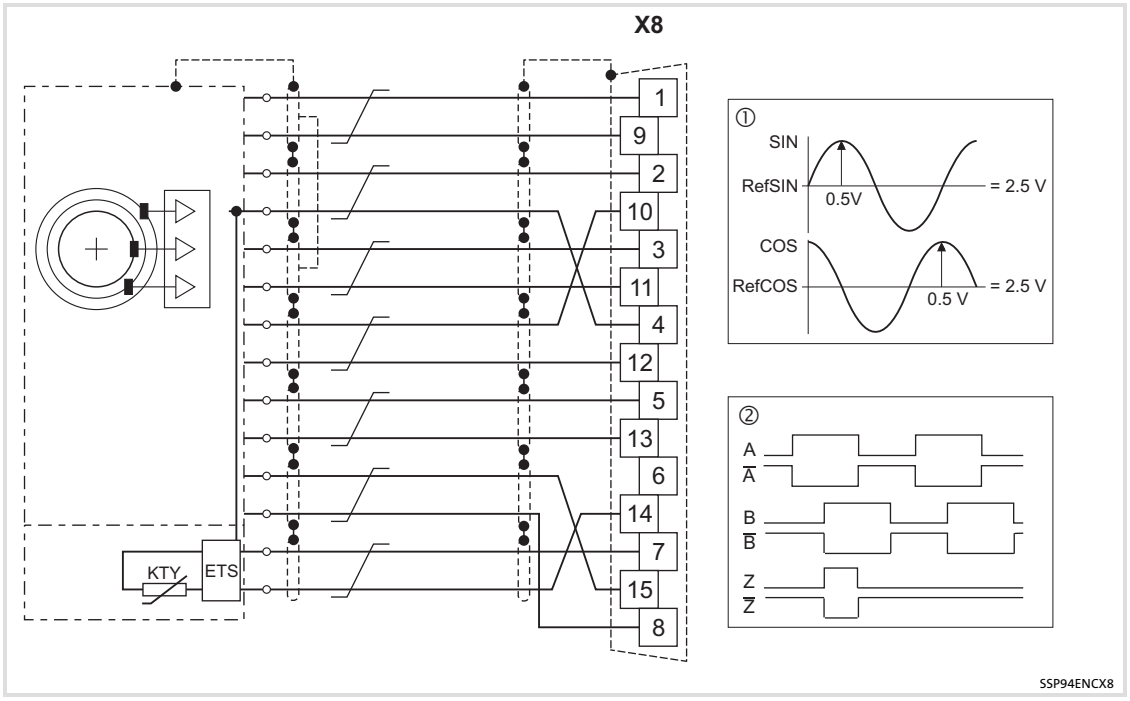

Fig. 3-36 Wiring principle

① Signals of a sin/cos encoder
② Signals with CW rotation

Terminal X8	Pin	Description				
		Cable EYF001...			EYF002...	
		TTL	1 V_{SS}	1 V_{SS} Hiperface	1 V_{SS} EnDat 2.1	SSI
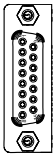	1	A	Cos	Cos	Cos	n. c.
	2	GND	GND	GND	GND	GND
	3	B	Sin	Sin	SIN	n. c.
	4	V_{CC}	V_{CC}	V_{CC}	V_{CC}	U_S
	5	Z	Z	+RS485	Data (Z)	Data +
	6	n. c.	n. c.	n. c.	n. c.	n. c.
	7	-KTY	-KTY	-KTY	-KTY	-KTY
	8	n. c.	n. c.	n. c.	Clock	Clock +
	9	/A	Ref Cos	Ref Cos	Ref Cos	n. c.
	10	n. c.	n. c.	n. c.	-Sense	n. c.
	11	/B	Ref SIN	Ref SIN	Ref SIN	n. c.
	12	n. c.	n. c.	n. c.	+Sense	n. c.
	13	/Z	/Z	-RS485	/Data (/Z)	Data -
	14	+KTY	+KTY	+KTY	+KTY	+KTY
9400SSP000X8	15	n. c.	n. c.	n. c.	/Clock	Clock -

Setting the supply voltage

The supply voltage of the encoder must be adapted to the cable length.

The voltage is adapted by means of the parameter ”Encoder voltage”, C00421.

Encoder	U_r	Voltage setting [V] in C00421 for cable length [m]						
Product key	[V]	0 - 10	10 - 30	30 - 50	50 - 70	70 - 90	90 - 100	100 -150
TTL								
IG2048-5V-T	5 ±5%	5.0	5.0	5.1	5.1	5.2	5.2	5.3
IG4096-5V-T								
IK2048-5V-T								
Sin-cos								
IG1024-5V-V	5 ±5%	5.0	5.0	5.1	5.1	5.2	5.2	5.3
IG2048-5V-S								
Sin-cos (Hiperface)								
AM1024-8V-H	8 (7 ... 12)	8.0						
Sin-cos (Endat)								
AM32-5V-E	5 ±5%	5.0						
AS2048-5V-E								
AM2048-5V-E								

Tab. 3-7

U_r Rated encoder voltage

The values listed in Tab. 3-7 are valid for the use of Lenze system cables at typical ambient temperatures.

Other cables, other cable cross-sections or extreme ambient temperatures can require metrologically determined adaptations.

For a higher encoder supply power, e.g. for laser-based length measuring systems, an external encoder supply must be provided.

3.9 Device modules

Depending on the device version or the application, the device is equipped with device modules. A nameplate attached to the side of the device serves to identify the already equipped device modules .

The possible modules are briefly described in the Accessories chapter. Detailed information can be found in the respective documentation.

3.10 Preparing the commissioning procedure

You need the following for commissioning:

- Keypad EZAEBK0001

or

- Computer with Windows® operating system (XP or 2000)
- Lenze PC software »Engineer«
- Connection with the controller via an interface, e.g.
  – Diagnostic interface X6 with USB diagnostic adapter
  – System bus (CANopen)
  – Communication module
- Software manual for the technology application used
- The communication manual for the network of the automation platform
- Mains voltage or 24-V voltage supply for the control electronics of the controller

Follow the instructions of the software and/or read the documentation.

4 Multi-axis controllers

4.1 Device features

- Three options of direct supply of the DC-bus voltage:
  - Power supply module or ”Single Drive” axis module via the integrated DC-link busbar (DC-bus)
  - DC input point via the integrated DC-link busbar (DC-bus)
  - Via terminals +UG and -UG
- Space-saving installation by compact design
- Innovative installation concept
- Power range: 370 W to 30 kW
- Pluggable and same connection system for the control cables in the entire power range
- Integrated DC busbar and DC fuse
- Direct connection of resolver and/or encoder feedback
  - Easy connection via predesigned system cables (accessories)
- Integrated phase controller for drift-free standstill
- Field-oriented control for asynchronous and synchronous motors
- Digital synchronisation system via bus system or digital frequency (extension module required)
- User configuration for control functions and input/output signals
  - Comprehensive library with function blocks
  - High flexibility with regard to the adaptation of the internal control structure to the drive task
- Extension interfaces for
  - communication
  - Controller functionality
  - Safety system
- System bus (CANopen)
  - servo inverter connection
  - for extending input and output terminals
  - connecting keypad and display units (HMI)
- Emergency operation with reduced mains voltage possible
  - Control of motor holding brake possible

4.2 Overview of the devices

Note!

For reasons of clarity, device types in this manual are placed together in groups with shared device characteristics. For example:

- ”Devices in the range 2 ... 24 A (0.37 ... 11 kW)” (often from project planner’s viewpoint) or
- ”Device sizes 1, 2 and 3” (often from installation point of view)

The following table gives you an overview of the different device characteristics:

Type	Rated current (rounded)	Motor power (typ.)	Device size (DS)
E94xMxE0024 E94xMxE0034 E94xMxE0044	2 A 3 A 4 A	0.37 kW 0.75 kW 1.5 kW	1
E94xMxE0074 E94xMxE0094	7 A 9 A	3.0 kW 4.0 kW	2
E94xMxE0134 E94xMxE0174 E94xMxE0244 E94xMxE0324	13 A 17 A 24 A 32 A	5.5 kW 7.5 kW 11 kW 15 kW	3
E94xMxE0474 E94xMxE0594	47 A 59 A	22 kW 30 kW	6

4.3 General data and operating conditions

General data

Conformity and approval			
Conformity			
CE	2014/35/EU	Low-Voltage Directive	
CE	2014/30/EU	EMC Directive	
EAC	TP TC 004/2011 (TP ZU 004/2011)	Regarding the safety of low-voltage equipment	Eurasian conformity TR ZU: Technical regulation of the tariff union
EAC	TP TC 020/2011 (TP ZU 020/2011)	Electromagnetic compatibility of technical products	Eurasian conformity TR ZU: Technical regulation of the tariff union
Approval			
$_{C}UL_{US}$	UL61800-5-1	Industrial Control Equipment (File No. E132659) for USA	
	CSA C22.2 No. 274-13	Industrial Control Equipment (File No. E132659) for Canada	

Protection of persons and device protection			
Type of protection	EN 60529	IP 20	Outside the wire range of the terminals on the motor side
	NEMA 250	Protection against accidental contact in accordance with type 1	
Insulation resistance	EN 61800-5-1	Overvoltage category III from 2000 m amsl: external measures for compliance with the overvoltage category II are required, e.g. ● upstream connection of transformer ● upstream connection of overvoltage protection system	
Control circuit isolation	EN 61800-5-1	up to 2000 m amsl: Safe mains isolation by double/reinforced insulation for mains with neutral earthing with a rated voltage for the external conductor/star point up to 300 V. from 2000 m amsl: If an overvoltage protection system is connected upstream to the device instead of an isolating transformer, additional external measures are required for maintaining the safe isolation.	
Short-circuit strength	EN 61800-5-1	Motor connection: with restrictions, error acknowledgement required Control terminals: full	
Motor - protective measures against		● Short circuit ● Earth fault ● Overvoltage ● motor stalling ● Motor overtemperature (PTC or thermal contact, I^2t monitoring)	
Leakage current	EN 61800-5-1	> 3.5 mA AC, > 10 mA DC	Observe regulations and safety instructions!
Cyclic mains switching		Cyclic mains switching of 5 times in 5 minutes is permissible without restrictions.	

Design		
Housing		
Carrier housing	Device sizes 1, 2 and 3	Glass-fiber reinforced plastic
Carrier housing	Device sizes as of 6	Metal
Dimensions		see ”Mechanical installation”
Weight		see ”Mechanical installation”

Mounting conditions		
Mounting place		in the control cabinet
Mounting position		vertical
Clearance		
above/beneath		Comply with the device-relating mounting instructions.
at the side		Can be installed in a row without any clearance

Supply conditions ”Single Drive”		
AC mains operation		No direct connection, DC supply module or ”Single Drive” network required
DC-bus operation		Direct connection via terminals or busbars For more information, please see the chapter DC-bus operation.
Power systems		
TT		Operation allowed without restrictions.
TN		
IT		Additional device-internal measure required (see (”Earthing of internal EMC filters”, 📖 207)
Motors	EN 60034	Only use motors that are suitable for inverter operation. Insulation strength: max. $\hat{u} \geq 1.5$ kV, max. $du/dt \geq 5$ kV/µs

Operating conditions

Environmental conditions		
Climate		
Storage	IEC/EN 60721-3-1	1K3 (-25 ... +60 °C)
Transport	IEC/EN 60721-3-2	2K3 (-25 ... +70 °C)
Operation	IEC/EN 60721-3-3	3K3 (-10 ... +55 °C) Current derating from +45 ... +55 °C: 2.5 %/°C
Site altitude		0 ... 4000 m amsl 1000 ... 4000 m amsl: current derating of 5 %/1000 m
Pollution	EN 61800-5-1	Degree of pollution 2
Vibration resistance (9.81 m/s² = 1 g)		
Transport	IEC/EN 60721-3-2	2M2
	EN 61800-2	2 ... 9 Hz: Amplitude 3.5 mm
		10 ... 200 Hz: acceleration resistant up to 10 m/s²
		200 ... 500 Hz: acceleration resistant up to 15 m/s²
Operation	Germanischer Lloyd	5 ... 13.2 Hz: Amplitude ±1 mm 13.2 ... 100 Hz: acceleration resistant up to 0.7 g
	IEC/EN 60068-2-6	10 ... 57 Hz: Amplitude 0.075 mm
		57 ... 150 Hz: Acceleration resistant up to 1 g

General electrical data

Assignment		Device size	Accessories: busbar mounting set/spare fuse
Axis module	**Installation backplane**		
E94xMxE0024 E94xMxE0034 E94xMxE0044	E94AZPM0044	1	- / 16 A, 700 V DC, EFSAR0016ARHN
E94xMxE0074 E94xMxE0094	E94AZPM0094	2	- / 40 A, 700 V DC, EFSAR0040ARHN
E94xMxE0134 E94xMxE0174 E94xMxE0244	E94AZPM0244	3	- / 100 A, 700 V DC, EFSAR0100ARZN
E94xMxE0324	E94AZPM0324		

Requirements on the motor cable		
Capacitance per unit length		
≤ 2.5 mm²/AWG 14		$C_{Core/core}/C_{Core/shield}$ < 75/150 pF/m
≥ 4 mm²/AWG 12		$C_{Core/core}/C_{Core/shield}$ < 150/300 pF/m
Electric strength		
	VDE 0250-1	$U_0/U_=$ 0.6/1.0 kV (U_0 = r.m.s. value external - conductor/PE, U = r.m.s. value - external conductor/external conductor)
	UL	U ≥ 600 V (U = r.m.s. value external conductor/external conductor)

Maximum motor and feedback cable lengths (for shielded motor cable with rated mains voltage)		
Type	Device size	[m]
E94xMxE0024 E94xMxE0034 E94xMxE0044	1	50
E94xMxE0074 E94xMxE0094	2	100
E94xMxE0134 E94xMxE0174 E94xMxE0244 E94xMxE0324	3	100
E94xMxE0474 E94xMxE0594	6	100
If EMC conditions must be met, the permissible cable lengths can be reduced.		

Tab. 4-1

EMC		
Operation on public supply systems	EN 61800-3	The controllers are designed for use in an industrial environment. Operation on public networks requires measures to be taken for limiting the expected emission of radio interferences.
Noise emission, in cables		
Design "Single Drive"	EN 61800-3	see Tab. 3-2 EMC protection requirements
Design "Multi Drive"		Depending on the filter at the central DC supply module.
Noise immunity (to EN 61800-3)		
Electrostatic discharge (ESD)	EN 61000-4-2	8 kV with air discharge, 4 kV with contact discharge against housing
Radio frequency		
Cable-guided	EN 61000-4-6	150 kHz ... 80 MHz, 10 V 80 % AM (1 kHz)
Interference (housing)	EN 61000-4-3	80 MHz ... 1000 MHz, 10 V/m 80 % AM (1 kHz)
Burst		
Power terminals and interfaces	EN 61000-4-4	2 kV/5 kHz
Signal interfaces	EN 61000-4-4	1 kV/5 kHz
Control connections	EN 61000-4-4	2 kV/5 kHz
Surge (surge voltage)		
Power terminals	EN 61000-4-5	1.2/50 µs, 1 kV phase/phase, 2 kV phase/PE

Protective insulation

Danger!

Dangerous electrical voltage

When one common voltage source is used for control voltages in separate potential areas, the protective insulation between the separate potential areas is deactivated.

Possible consequences:

► The specified protective insulations are not complied with.

Protective measures:

► Use independent voltage sources.

The available protective insulation within the controller of the " 9400 Servo Drives" series in accordance with EN 61800-5-1 is implemented with a rated voltage for the external conductor/star point of up to 300 V for mains with neutral earthing.

The following graphic representation

- ► shows the arrangement of the terminal strips and the separate potential areas of the controller.
- ► serves to determine the relevant protective insulation between two terminals in differently insulated separate potential areas.

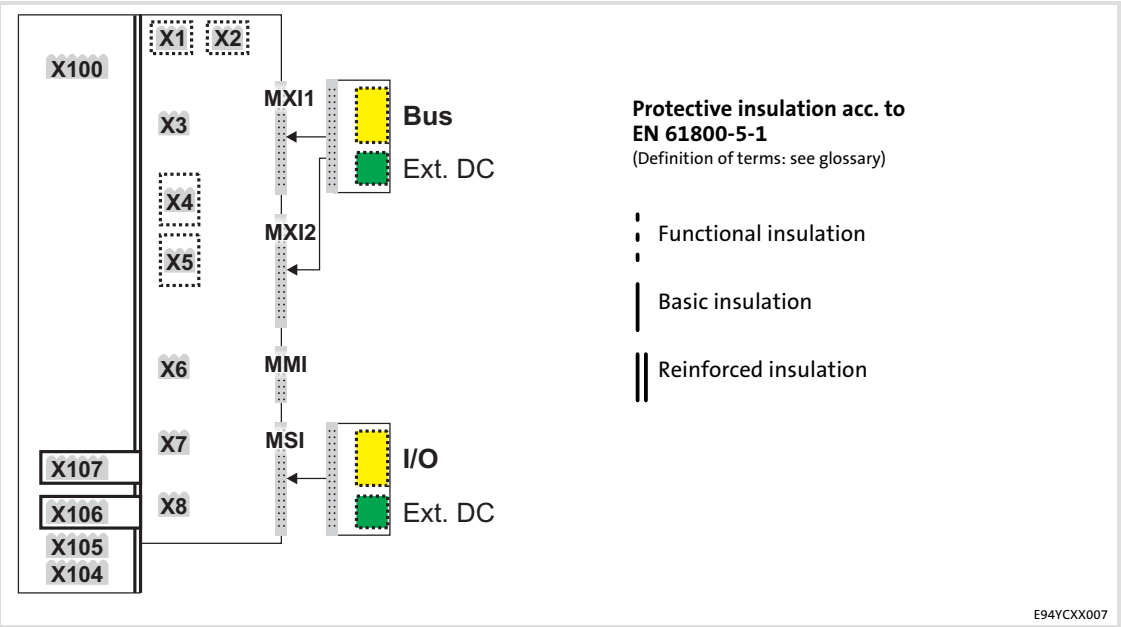

Terminal strip	Connection Device size 1 ... 6
X100	+UG, -UG
X104	not available
X105	U, V, W
X106	Motor PTC
X107	Control of motor holding brake

Terminal strip	Connection
X1	CAN on board 9400
X2	• State bus • 24 V (ext.)
X3	Analog input/output
X4	Digital outputs
X5	Digital inputs
X6	Diagnostics
X7	Resolvers
X8	Encoder
MXI1, MXI2	Extension module
MMI	Memory module
MSI	Safety module

Example

Which type of protective insulation is used between the bus terminal of the device module in slot MXI1 or MXI2 and the mains terminal X100?

The separate potential area with the better protective insulation is decisive.

► The separate potential area of the device module bus terminal is ”functionally insulated”.

► The separate potential area of the mains terminal has a ”reinforced insulation”.

Result: The insulation between the mains terminal X100 and the bus terminal is of the ”reinforced insulation” type.

4.4 Rated data

The E94x**M**xExxx**4** devices can be used in the voltage range of 260 ... 746 V DC.

Note!
To ensure a faultless operation of the devices the code C00173 must be set according to the mains voltage connected.

Emergency operation

Operation of the E94xMxxxx4 devices with an emergency voltage supply at +UG, -UG, is possible with $V_{DC} \leq 260$ V. The settings in C00173 and C00174 are to be adapted accordingly. A 24-V supply at X2 is required.

4.4.1 Overview

Input data

	Voltage	Frequency	Rated current [A]		Number of phases
	[V]	[Hz]	up to +45 °C ①	up to +55 °C ①	
E94xMxE0024	325/565/675	0 (DC)	2.6/2.6/2.3	2.0/2.0/1.7	-
E94xMxE0034	325/565/675	0 (DC)	4.3/4.3/3.8	3.2/3.2/2.9	-
E94xMxE0044	325/565/675	0 (DC)	6.7/6.7/5.9	5.0/5.0/4.4	-
E94xMxE0074	325/565/675	0 (DC)	12.1/12.1/10.6	9.1/9.1/8.0	-
E94xMxE0094	325/565/675	0 (DC)	15.4/15.4/13.5	11.6/11.6/10.1	-
E94xMxE0134	325/565/675	0 (DC)	20.6/20.6/18.0	15.5/15.5/13.5	-
E94xMxE0174	325/565/675	0 (DC)	25.7/25.7/22.5	19.3/19.3/16.9	-
E94xMxE0244	325/565/675	0 (DC)	35.5/35.5/31.1	26.3/26.3/23.3	-
E94xMxE0324	325/565/675	0 (DC)	48.0/48.0/38.9	36.0/36.0/29.1	-
E94xMxE0474	325/565/675	0 (DC)	71.0/71.0/62.0	53.3/53.3/46.5	-
E94xMxE0594	325/565/675	0 (DC)	89.0/89.0/77.0	66.8/66.8/57.8	-

① Temperature in the control cabinet

Output data

	Voltage	Current [A]		Number of phases
Type	[V]	up to +45 °C ①	up to +55 °C ①	
E94xMxE0024	0 - 230/400/480	1.5/1.5/1.3	1.1/1.1/1.0	3
E94xMxE0034	0 - 230/400/480	2.5/2.5/2.2	1.9/1.9/1.7	3
E94xMxE0044	0 - 230/400/480	4/4/3.5	3/3/2.6	3
E94xMxE0074	0 - 230/400/480	7/7/6.1	5.3/5.3/4.6	3
E94xMxE0094	0 - 230/400/480	9.3/9.3/8.2	7.0/7.0/6.2	3
E94xMxE0134	0 - 230/400/480	13/13/11.4	9.8/9.8/8.6	3
E94xMxE0174	0 - 230/400/480	16.5/16.5/14.4	12.4/12.4/10.8	3
E94xMxE0244	0 - 230/400/480	23.5/23.5/20.6	17.6/17.6/15.5	3
E94xMxE0324	0 - 230/400/480	32.0/32.0/25.9	24.0/24.0/19.4	3
E94xMxE0474	0 - 230/400/480	47.0/47.0/42.0	35.3/35.3/30.8	3
E94xMxE0594	0 - 230/400/480	59.0/59.0/52.0	44.3/44.3/38.7	3

① Temperature in the control cabinet

Power losses

	Power loss P_V [W] at a switching frequency of 4 kHz			
Type	U_{Lr} = 230 V	U_{Lr} = 400 V	U_{LN} = 480 V	when controller is inhibited
E94xMxE0024	65	80	95	40
E94xMxE0034	75	95	110	
E94xMxE0044	90	120	135	
E94xMxE0074	105	145	165	
E94xMxE0094	130	170	200	
E94xMxE0134	160	215	245	
E94xMxE0174	185	255	290	
E94xMxE0244	235	320	375	
E94xMxE0324	290	405	470	
E94xMxE0474	960	960	960	75
E94xMxE0594	980	980	980	

4.4.2 Operation in 230-V-AC system

Mains	Voltage U_{DC} [V]	Voltage range U_{DC} [V]	Frequency range f [Hz]
2/PE DC	325	260 - 0 % ... 370 + 0 %	-

	Input current at I_{aN8} (without external mains choke)	Output power U, V, W	Motor power (typical) 4-pole ASM	
Type	I_{DC} [A]	S_{aN} [kVA]	P_{aN} [kW]	P_{aN} [hp]
E94xMxE0024	2.6	0.5	0.18	0.25
E94xMxE0034	4.3	0.9	0.37	0.5
E94xMxE0044	6.7	1.4	0.75	1
E94xMxE0074	12.1	2.5	1.5	2
E94xMxE0094	15.4	3.3	2.2	3
E94xMxE0134	20.6	4.7	3	4
E94xMxE0174	25.7	5.9	4	5.5
E94xMxE0244	35.5	8.4	5	7.5
E94xMxE0324	48.0	11.5	7.5	10.2
E94xMxE0474	71.0	16.9	11	15
E94xMxE0594	89.0	21.2	15	20

	Output currents [A] at switching frequency						
	2 kHz		4 kHz		8 kHz		16 kHz
	I_{aN2}	I_{aM2}	I_{aN4}	I_{aM4}	I_{aN8}	I_{aM8}	I_{aN16}
E94xMxE0024	1.9	6.0	1.9	6.0	**1.5**	4.8	1.1
E94xMxE0034	3.1	10.0	3.1	10.0	**2.5**	8.0	1.9
E94xMxE0044	5.0	16.0	5.0	16.0	**4.0**	12.8	3.0
E94xMxE0074	8.8	21.0	8.8	21.0	**7.0**	16.8	5.3
E94xMxE0094	11.7	28.0	11.7	28.0	**9.3**	22.4	7.0
E94xMxE0134	16.3	39.0	16.3	39.0	**13.0**	31.2	9.8
E94xMxE0174	20.6	49.5	20.6	49.5	**16.5**	39.6	12.4
E94xMxE0244	29.4	70.5	29.4	70.5	**23.5**	56.4	17.6
E94xMxE0324	40.0	76.8	40.0	76.8	**32.0**	76.8	16.0
E94xMxE0474	47.0	94.0	**47.0**	94.0	41.0	82.0	21.5
E94xMxE0594	59.0	118	**59.0**	118	41.0	82.0	21.5

I_{aN2} Rated value of permanent output current at a frequency of ≥ 0 Hz

I_{aM2} Maximum output current (overload current) at frequency ≥ 0 Hz
- Periodic load change of 0.5 s with I_{aM2} and recovery time of 4.5 s with 75 % I_{aN2}

I_{aN4}, I_{aN8}, I_{aN16} Rated value of continuous output current at a frequency of ≥ 5 Hz (reduce to 0.66 * I_{aNx} for 0 ... 5 Hz)

I_{aM4}, I_{aM8} Maximum output current (overload current) at frequency ≥ 5 Hz (reduce to 0.66 * I_{aMx} for 0 ... 5 Hz)
- Periodic load change of 0.5 s with I_{aMx} and recovery time of 4.5 s with 75 % I_{aNx}
- Can be achieved using the setting "x kHz fixed" in C00018

bold Nominal value I_{aN}

4) Depending on the heatsink temperature, the mains voltage and the motor cable length, the switching frequency can be changed even at smaller currents.

4.4.3 Operation in 400-V-AC system

Mains	Voltage U_{DC} [V]	Voltage range U_{DC} [V]	Frequency range f [Hz]
2/PE DC	565	455 - 0 % ... 620 + 0 %	-

	Input current at I_{aN8} (without external mains choke)	Output power U, V, W	Motor power (typical) 4-pole ASM	
Type	I_{DC} [A]	S_{aN} [kVA]	P_{aN} [kW]	P_{aN} [hp]
E94xMxE0024	2.6	0.9	0.37	0.5
E94xMxE0034	4.3	1.6	0.75	1.0
E94xMxE0044	6.7	2.5	1.5	2.0
E94xMxE0074	12.1	4.4	3.0	4.0
E94xMxE0094	15.4	5.8	4.0	5.0
E94xMxE0134	20.6	8.1	5.5	7.5
E94xMxE0174	25.7	10.3	7.5	11.0
E94xMxE0244	35.5	14.7	11.0	15.0
E94xMxE0324	48.0	20.0	15.0	20.4
E94xMxE0474	71.0	29.3	22	29
E94xMxE0594	89.0	36.8	30	40

	Output currents [A] at switching frequency						
	2 kHz		4 kHz		8 kHz		16 kHz
	I_{aN2}	I_{aM2}	I_{aN4}	I_{aM4}	I_{aN8}	I_{aM8}	I_{aN16}
E94xMxE0024	1.9	6.0	1.9	6.0	**1.5**	4.8	1.1
E94xMxE0034	3.1	10.0	3.1	10.0	**2.5**	8.0	1.9
E94xMxE0044	5.0	16.0	5.0	16.0	**4.0**	12.8	3.0
E94xMxE0074	8.8	21.0	8.8	21.0	**7.0**	16.8	5.3
E94xMxE0094	11.7	28.0	11.7	28.0	**9.3**	22.4	7.0
E94xMxE0134	16.3	39.0	16.3	39.0	**13.0**	31.2	9.8
E94xMxE0174	20.6	49.5	20.6	49.5	**16.5**	39.6	12.4
E94xMxE0244	29.4	70.5	29.4	70.5	**23.5**	56.4	17.6
E94xMxE0324	40.0	76.8	40.0	76.8	**32.0**	76.8	16.0
E94xMxE0474	47.0	94.0	**47.0**	94.0	41.0	82.0	21.5
E94xMxE0594	59.0	118	**59.0**	118	41.0	82.0	21.5

I_{aN2} Rated value of permanent output current at a frequency of ≥ 0 Hz

I_{aM2} Maximum output current (overload current) at frequency ≥ 0 Hz
- Periodic load change of 0.5 s with I_{aM2} and recovery time of 4.5 s with 75 % I_{aN2}

I_{aN4}, I_{aN8}, I_{aN16} Rated value of continuous output current at a frequency of ≥ 5 Hz (reduce to 0.66 * I_{aNx} for 0 ... 5 Hz)

I_{aM4}, I_{aM8} Maximum output current (overload current) at frequency ≥ 5 Hz (reduce to 0.66 * I_{aMx} for 0 ... 5 Hz)
- Periodic load change of 0.5 s with I_{aMx} and recovery time of 4.5 s with 75 % I_{aNx}
- Can be achieved using the setting "x kHz fixed" in C00018

bold Nominal value I_{aN}

4) Depending on the heatsink temperature, the mains voltage and the motor cable length, the switching frequency can be changed even at smaller currents.

4.4.4 Operation in 480-V-AC system

Mains	Voltage U_{DC} [V]	Voltage range U_{DC} [V]	Frequency range f [Hz]
2/PE DC	675	540 - 0 % ... 746 + 0 %	-

	Input current at I_{aN8} (without external mains choke)	Output power U, V, W	Motor power (typical) 4-pole ASM	
Type	I_{DC} [A]	S_{aN} [kVA]	P_{aN} [kW]	P_{aN} [hp]
E94xMxE0024	2.3	1.0	0.37	0.5
E94xMxE0034	3.8	1.6	0.75	1.0
E94xMxE0044	5.9	2.6	1.5	2.0
E94xMxE0074	10.6	4.6	3.0	4.0
E94xMxE0094	13.5	8.5	4.0	5.0
E94xMxE0134	18.0	10.8	5.5	7.5
E94xMxE0174	22.5	15.4	7.5	10.0
E94xMxE0244	31.1	19.4	11.0	15.0
E94xMxE0324	38.9	31.4	15.0	20.4
E94xMxE0474	62.0	38.1	22	29
E94xMxE0594	77.0	38.9	30	40

	Output currents [A] at switching frequency						
	2 kHz		4 kHz		8 kHz		16 kHz
	I_{aN2}	I_{aM2}	I_{aN4}	I_{aM4}	I_{aN8}	I_{aM8}	I_{aN16}
E94xMxE0024	1.9	6.0	1.9	6.0	**1.3**	4.2	1.0
E94xMxE0034	3.1	10.0	3.1	10.0	**2.2**	7.0	1.7
E94xMxE0044	5.0	16.0	5.0	16.0	**3.5**	11.2	2.6
E94xMxE0074	8.8	21.0	8.8	21.0	**6.1**	14.7	4.6
E94xMxE0094	11.7	28.0	11.7	28.0	**8.2**	19.6	6.1
E94xMxE0134	16.3	39.0	16.3	39.0	**11.4**	27.3	8.6
E94xMxE0174	20.6	49.5	20.6	49.5	**14.4**	34.7	10.9
E94xMxE0244	29.4	70.5	29.4	70.5	**20.6**	49.4	15.4
E94xMxE0324	40.0	76.8	40.0	76.8	**25.9**	62.1	13.0
E94xMxE0474	47.0	94.0	41.1	82.2	35.8	71.6	21.5
E94xMxE0594	59.0	118	51.6	103	35.9	71.8	21.5

I_{aN2} Rated value of permanent output current at a frequency of ≥ 0 Hz

I_{aM2} Maximum output current (overload current) at frequency ≥ 0 Hz
- Periodic load change of 0.5 s with I_{aM2} and recovery time of 4.5 s with 75 % I_{aN2}

I_{aN4}, I_{aN8}, I_{aN16} Rated value of continuous output current at a frequency of ≥ 5 Hz (reduce to 0.66 * I_{aNx} for 0 ... 5 Hz)

I_{aM4}, I_{aM8} Maximum output current (overload current) at frequency ≥ 5 Hz (reduce to 0.66 * I_{aMx} for 0 ... 5 Hz)
- Periodic load change of 0.5 s with I_{aMx} and recovery time of 4.5 s with 75 % I_{aNx}
- Can be achieved using the setting "x kHz fixed" in C00018

bold Nominal value I_{aN}

4) Depending on the heatsink temperature, the mains voltage and the motor cable length, the switching frequency can be changed even at smaller currents.

4.4.5 Fuses and cable cross-sections

Mains	Voltage U_{DC} [V]	Voltage range U_{DC} [V]	Frequency range f [Hz]
2/PE DC (alternatively)	325 ... 675	260 - 0 % ... 746 + 0 %	0

When the integrated DC busbar is used, wiring is not required. The mounting backplane already includes an integrated fuse.

When terminals +UG/-UG are used, dimension the cables and fuses as described in the chapter DC-bus operation.

4.4.6 Overcurrent operation

The controllers are designed for two overcurrent modes.

A load period must be followed by a recovery time. During the recovery time the current must not exceed the value given.

The values given refer to the rated output current I_{aN8}.

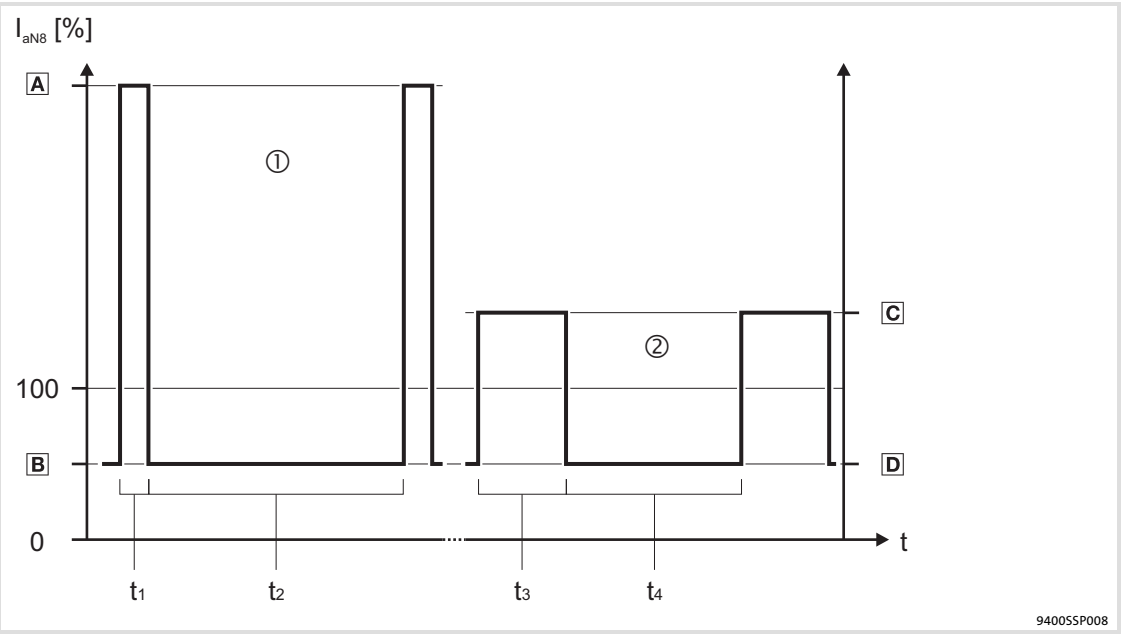

Fig. 4-1 Overcurrent capacity at 45° C

E94xSxE0024 ... E94xSxE1044 E94xMxE0024 ... E94xMxE0594	E94xSxE1454 ... E94xSxE4604
● 5 s cycle ① – t_1 = 0.5 s load time with peak current A – t_2 = 4.5 s recovery time with limited current B	● 1-min cycle ① – t_1 = 10 s load time with peak current A – t_2 = 50 s recovery time with limited current B
● 3-min cycle ② – t_3 = 60 s load time with peak current C – t_4 = 120 s recovery time with limited current D	● 3-min cycle ② – t_3 = 60 s load time with peak current C – t_4 = 120 s recovery time with limited current D

230 V

Type	I [A] in a cycle of 5 seconds ① (📖 179)							
	f = 2 kHz		f = 4 kHz		f = 8 kHz		f = 16 kHz	
	A	B	A	B	A	B	A	B
E94xMxE0024	6.0	1.4	6.0	1.4	4.8	1.1	-	-
E94xMxE0034	10.0	2.3	10.0	2.3	8.0	1.9	-	-
E94xMxE0044	16.0	3.8	16.0	3.8	12.8	3.0	-	-
E94xMxE0074	21.0	6.6	21.0	6.6	16.8	5.3	-	-
E94xMxE0094	27.9	8.7	27.9	8.7	22.3	7.0	-	-
E94xMxE0134	39.0	12.2	39.0	12.2	31.2	9.8	-	-
E94xMxE0174	49.5	15.5	49.5	15.5	39.6	12.4	-	-
E94xMxE0244	70.5	22.0	70.5	22.0	47.0	17.6	-	-
E94xMxE0324	76.8	30.0	76.8	30.0	76.8	24.0	-	-
E94xMxE0474	94.0	35.3	94.0	35.3	81.8	30.6	-	-
E94xMxE0594	118	44.3	118	44.3	82.0	30.7	-	-

Type	I [A] in a cycle of 3 minute ② (📖 179)							
	f = 2 kHz		f = 4 kHz		f = 8 kHz		f = 16 kHz	
	C	D	C	D	C	D	C	D
E94xMxE0024	2.8	1.4	2.8	1.4	2.3	1.1	-	-
E94xMxE0034	4.7	2.4	4.7	2.4	3.8	1.9	-	-
E94xMxE0044	7.5	3.8	7.5	3.8	6.0	3.0	-	-
E94xMxE0074	13.2	6.6	13.2	6.6	10.5	5.3	-	-
E94xMxE0094	17.5	8.7	17.5	8.7	14.0	7.0	-	-
E94xMxE0134	24.4	12.2	24.4	12.2	19.5	9.8	-	-
E94xMxE0174	31.0	15.5	31.0	15.5	24.8	12.4	-	-
E94xMxE0244	44.2	22.1	44.2	22.1	35.3	17.6	-	-
E94xMxE0324	60.0	30.0	60.0	30.0	48.0	24.0	-	-
E94xMxE0474	70.5	35.3	70.5	35.3	61.6	30.6	-	-
E94xMxE0594	88.5	44.3	88.5	44.3	61.4	30.7	-	-

400 V

Type	I [A] in a cycle of 5 seconds ① (📖 179)							
	f = 2 kHz		f = 4 kHz		f = 8 kHz		f = 16 kHz	
	A	B	A	B	A	B	A	B
E94xMxE0024	6.0	1.4	6.0	1.4	4.8	1.1	-	-
E94xMxE0034	10.0	2.3	10.0	2.3	8.0	1.9	-	-
E94xMxE0044	16.0	3.8	16.0	3.8	12.8	3.0	-	-
E94xMxE0074	21.0	6.6	21.0	6.6	16.8	5.3	-	-
E94xMxE0094	27.9	8.7	27.9	8.7	22.3	7.0	-	-
E94xMxE0134	39.0	12.2	39.0	12.2	31.2	9.8	-	-
E94xMxE0174	49.5	15.5	49.5	15.5	39.6	12.4	-	-
E94xMxE0244	70.5	22.0	70.5	22.0	47.0	17.6	-	-
E94xMxE0324	76.8	30.0	76.8	30.0	76.8	24.0	-	-
E94xMxE0474	94.0	35.3	94.0	35.3	81.8	30.6	-	-
E94xMxE0594	118	44.3	118	44.3	82.0	30.7	-	-

Type	I [A] in a cycle of 3 minute ② (📖 179)							
	f = 2 kHz		f = 4 kHz		f = 8 kHz		f = 16 kHz	
	C	D	C	D	C	D	C	D
E94xMxE0024	2.8	1.4	2.8	1.4	2.3	1.1	-	-
E94xMxE0034	4.7	2.4	4.7	2.4	3.8	1.9	-	-
E94xMxE0044	7.5	3.8	7.5	3.8	6.0	3.0	-	-
E94xMxE0074	13.2	6.6	13.2	6.6	10.5	5.3	-	-
E94xMxE0094	17.5	8.7	17.5	8.7	14.0	7.0	-	-
E94xMxE0134	24.4	12.2	24.4	12.2	19.5	9.8	-	-
E94xMxE0174	31.0	15.5	31.0	15.5	24.8	12.4	-	-
E94xMxE0244	44.2	22.1	44.2	22.1	35.3	17.6	-	-
E94xMxE0324	60.0	30.0	60.0	30.0	48.0	24.0	-	-
E94xMxE0474	70.5	35.3	70.5	35.3	61.6	30.6	-	-
E94xMxE0594	88.5	44.3	88.5	44.3	61.4	30.7	-	-

480 V

Type	I [A] in a cycle of 5 seconds ① (📖 179)							
	f = 2 kHz		f = 4 kHz		f = 8 kHz		f = 16 kHz	
	A	B	A	B	A	B	A	B
E94xMxE0024	6.0	1.4	6.0	1.4	4.2	1.0	-	-
E94xMxE0034	10.0	2.3	10.0	2.3	7.0	1.6	-	-
E94xMxE0044	16.0	3.8	16.0	3.8	11.2	2.6	-	-
E94xMxE0074	21.0	6.6	21.0	6.6	14.7	4.6	-	-
E94xMxE0094	27.9	8.7	27.9	8.7	19.5	6.1	-	-
E94xMxE0134	39.0	12.2	39.0	12.2	27.3	8.5	-	-
E94xMxE0174	49.5	15.5	49.5	15.5	34.7	10.8	-	-
E94xMxE0244	70.5	22.0	70.5	22.0	41.1	15.4	-	-
E94xMxE0324	76.8	30.0	76.8	30.0	62.2	19.4	-	-
E94xMxE0474	94.0	35.3	94.0	35.3	71.6	26.7	-	-
E94xMxE0594	118	44.3	118	44.3	71.8	26.8	-	-

Type	I [A] in a cycle of 3 minute ② (📖 179)							
	f = 2 kHz		f = 4 kHz		f = 8 kHz		f = 16 kHz	
	C	D	C	D	C	D	C	D
E94xMxE0024	2.8	1.4	2.8	1.4	2.0	1.0	-	-
E94xMxE0034	4.7	2.4	4.7	2.4	3.3	1.6	-	-
E94xMxE0044	7.5	3.8	7.5	3.8	5.3	2.6	-	-
E94xMxE0074	13.2	6.6	13.2	6.6	9.2	4.6	-	-
E94xMxE0094	17.5	8.7	17.5	8.7	12.2	6.1	-	-
E94xMxE0134	24.4	12.2	24.4	12.2	17.1	8.5	-	-
E94xMxE0174	31.0	15.5	31.0	15.5	21.7	10.8	-	-
E94xMxE0244	44.2	22.1	44.2	22.1	30.8	15.4	-	-
E94xMxE0324	60.0	30.0	60.0	30.0	38.9	19.4	-	-
E94xMxE0474	70.5	35.3	70.5	35.3	53.9	26.7	-	-
E94xMxE0594	88.5	44.3	88.5	44.3	53.7	26.8	-	-

4.4.7 Current-time diagrams

In addition to the data for overcurrent operation, here you are provided with information on the dimensioning of application-oriented cycles.

By means of the following information you determine permissible load periods with overcurrents and required recovery times with limited currents. If the currents and times determined are observed, the Ixt monitoring function for the protection of the devices will not respond.

Characteristics

The following characteristics (”Current-time diagrams”) describe the device utilisation via amperage and the duration of current flow.
The left part of the diagram (negative time data) represents the overload phase, while the right part of the diagram (positive time data) shows the relieving phase.
Devices with an identical Ixt behaviour are combined within a diagram. A second diagram enlarges a cutout area to improve the clearness of display.

Requirements

- Switching frequency

  The curves shown always refer to the variable rated switching frequency (f_{chopp}) at which the rated device current is permissible permanently. As this rated switching frequencies are different for the individual devices, they are specified with the diagrams. This means that the switching frequency is reduced automatically during the overload phase. During the recovery phase the switching frequency set is maintained.

- Mains voltage

  In the diagrams a mains voltage of U_N = 400 V was assumed. Where applicable, a current derating depending on the mains voltage may be necessary for the devices, depending on the switching frequency that is reached. This means that the currents are weighted differently in the Ixt monitoring. The devices for which a derating is required can be gathered from the ”Rated values” section. The continuous currents specified there then are the 100% values which are required for working with the diagrams.

- Ambient temperature

  The ambient temperature may be maximally T_{Amb} < 45 °C. In the case of higher ambient temperatures the reduced continuous currents have to be taken into consideration.

- Output frequency

  In the diagrams an output frequency (= field frequency) f_{out} > 5 Hz has been assumed. In the case of smaller output frequencies (f_{out} = 0 ... 5 Hz), a different switching frequency results in a different device utilisation due to a different continuous current. When the diagrams were created, this device behaviour was not taken into consideration.
  If a fixed switching frequency f > 4 kHz is selected, the reduction of the permissible continuous current has to be considered (100 % = reduced continuous current) for smaller output frequencies (f_{out} = 0 ... 5 Hz).

Application example

- Drive task
  - A current I_{ol} = 4.0 A is required for a time t_{ol} = 3 s.
  - During the recovery phase there is a current I_{re} = 1.0 A.
  - During the overload phase a switching frequency of 4 kHz is accepted.
  - The switching frequency during the recovery phase is to be 8 kHz.
  - The mains voltage is 400 V.
  - The times with output frequencies under 5 Hz are insignificant.
- Problem
  - How long does the recovery phase t_{re} have to be when the E94AxxE0034 controller is used?
- The currents required are based on the rated device current:
  - I_{ol} = 4.0 A/2.5 A = 160 % - selected characteristic: 175 %
  - I_{re} = 1.0A/2.5 A = 40 % - selected characteristic: 50 %
  - Because of the short overcurrent time t_{ol} = 3 s, the cutout diagram of the E94AxxE0034 device is taken into consideration.
  - The switching frequency f_{chopp} = 8 kHz, var does not have to be considered separately.
- Procedure within the diagram
  - ① Starting from the time axis at t_{ol} = 3 s, a perpendicular line is drawn to the selected characteristic at 175 % (corresponds to the minimum required current I_{ol}).
  - ② Draw a straight line from the point of intersection horizontally to the right to the selected characteristic, the recovery phase, at 50 %.
  - ③ Draw a perpendicular line from the point of intersection back to the time axis.
  - ④ Read the minimum required duration of recovery on the time axis.

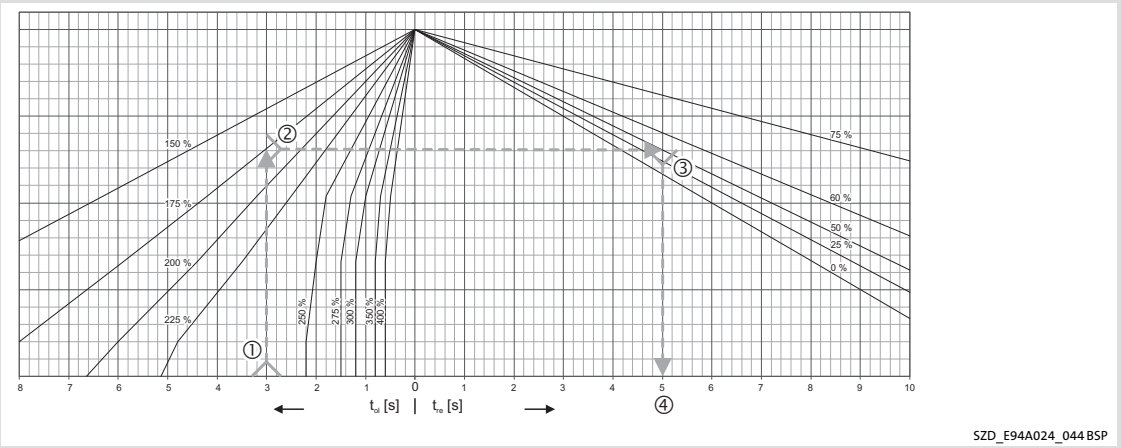

- Result in the example
  - The duration of recovery has to be at least t_{re} = 5 s!

Guide

Type	Diagram
E94xxxE0024	Page 186 Fig. 4-2/ Fig. 4-3
E94xxxE0034	
E94xxxE0044	
E94xxxE0074	Page 187 Fig. 4-4/ Fig. 4-5
E94xxxE0134	
E94xxxE0174	
E94xxxE0244	
E94xMxE0324	
E94xxxE0474	Page 188 Fig. 4-6 / Fig. 4-7
E94xxxE0594	

Guide

Type	Diagram
E94xxxE0024	Page 186 Fig. 4-2/ Fig. 4-3
E94xxxE0034	
E94xxxE0044	
E94xxxE0074	Page 187 Fig. 4-4/ Fig. 4-5
E94xxxE0134	
E94xxxE0174	
E94xxxE0244	
E94xMxE0324	
E94xxxE0474	Page 188 Fig. 4-6 / Fig. 4-7
E94xxxE0594	

E94xxxE0024 ... E94xxxE0044

Type	U_r	100 %	f_{chopp}
	[V]	[A]	[Setting]
E94xxxE0024	400	1.5	8 kHz var
E94xxxE0034		2.5	
E94xxxE0044		4.0	

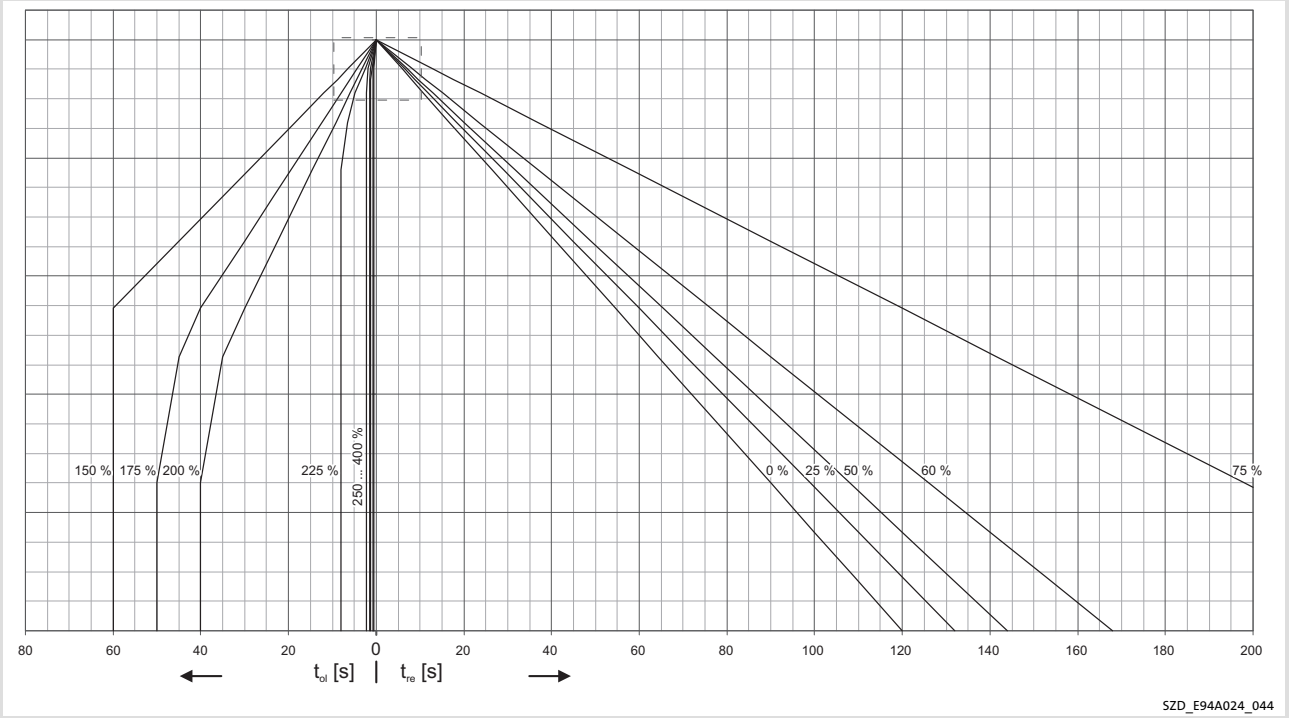

Fig. 4-2 Diagram for E94xxxE0024 and E94xxxE0044

t_{ol} Duration of the load phase
t_{re} Duration of the recovery phase

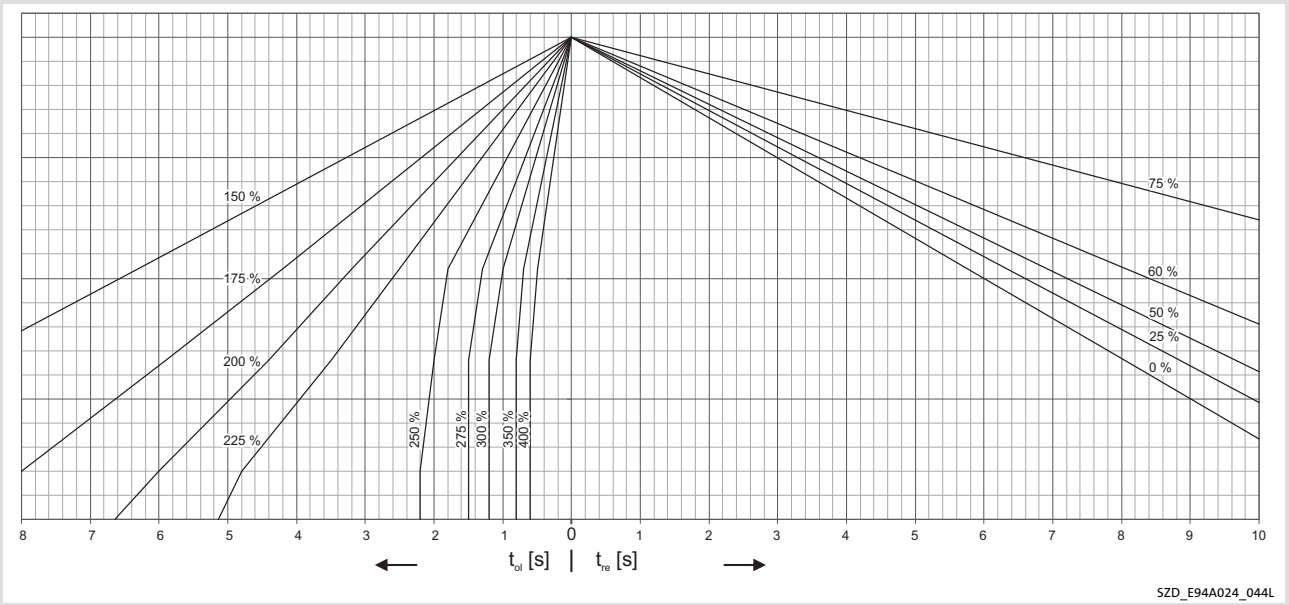

Fig. 4-3 Area cutout for E94xxxE0024 and E94xxxE0044

E94xxxE0074 ... E94xxxE0244 and E94xMxE0324

Type	V_r	100 %	f_{chopp}
	[V]	[A]	[Setting]
E94xxxE0074	400	7.0	8 kHz var
E94xMxE0094		9.3	8 kHz var
E94xxxE0134		13.0	8 kHz var
E94xxxE0174		16.5	
E94xxxE0244		23.5	
E94xMxE0324		32.0	8 kHz var

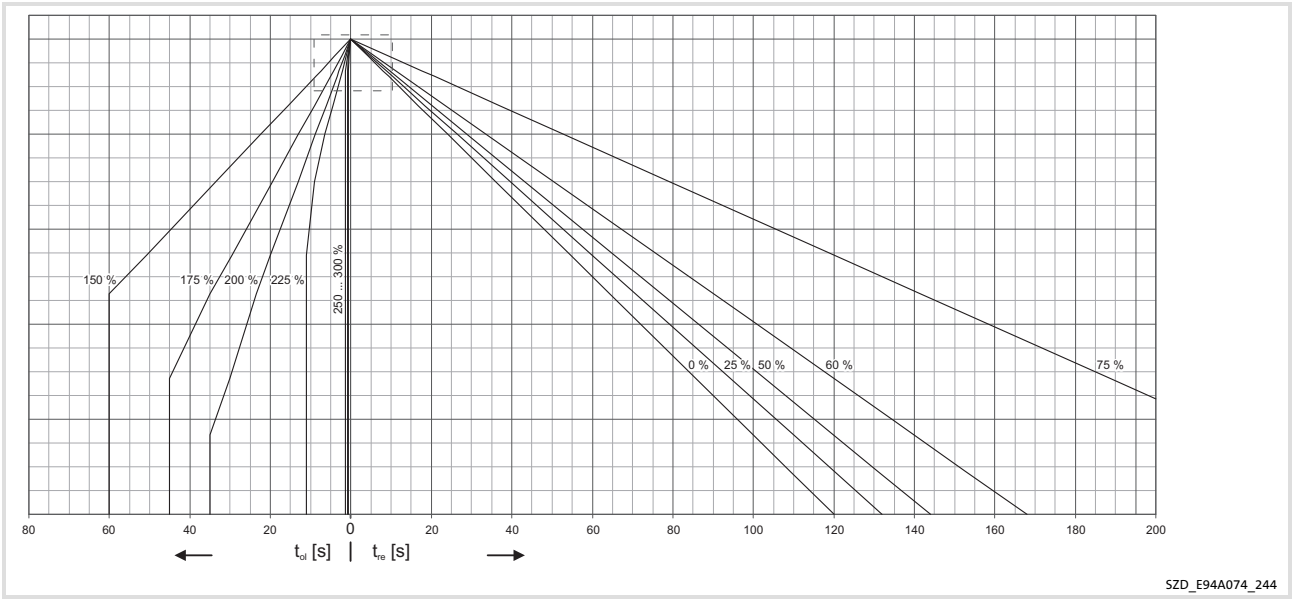

Fig. 4-4 Diagram for E94xxxE0074 ... E94xxxE0244, E94xMxE0324

t_{ol} Duration of the load phase
t_{re} Duration of the recovery phase

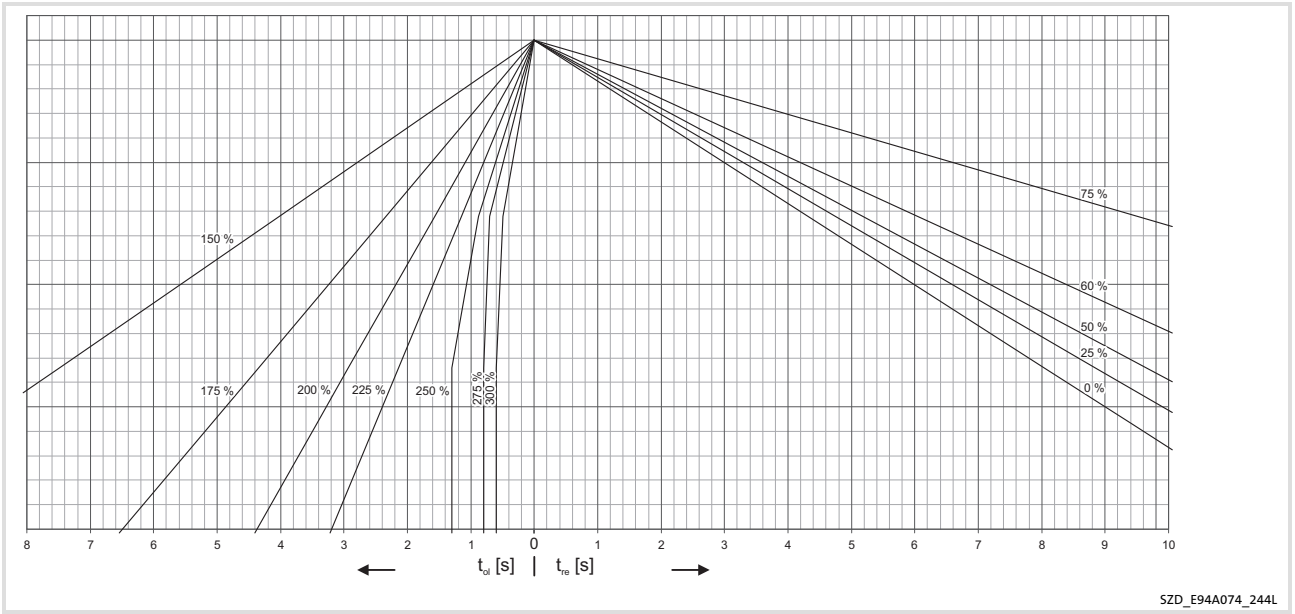

Fig. 4-5 Area cutout for E94xxxE0074 ... E94xxxE0244, E94xMxE0324

E94xxxE0474 and E94xxxE0594

Type	U_r	100 %	f_{chopp}
	[V]	[A]	[Setting]
E94xxxE0474	400	47.0	4 kHz var
E94xxxE0594		59.0	

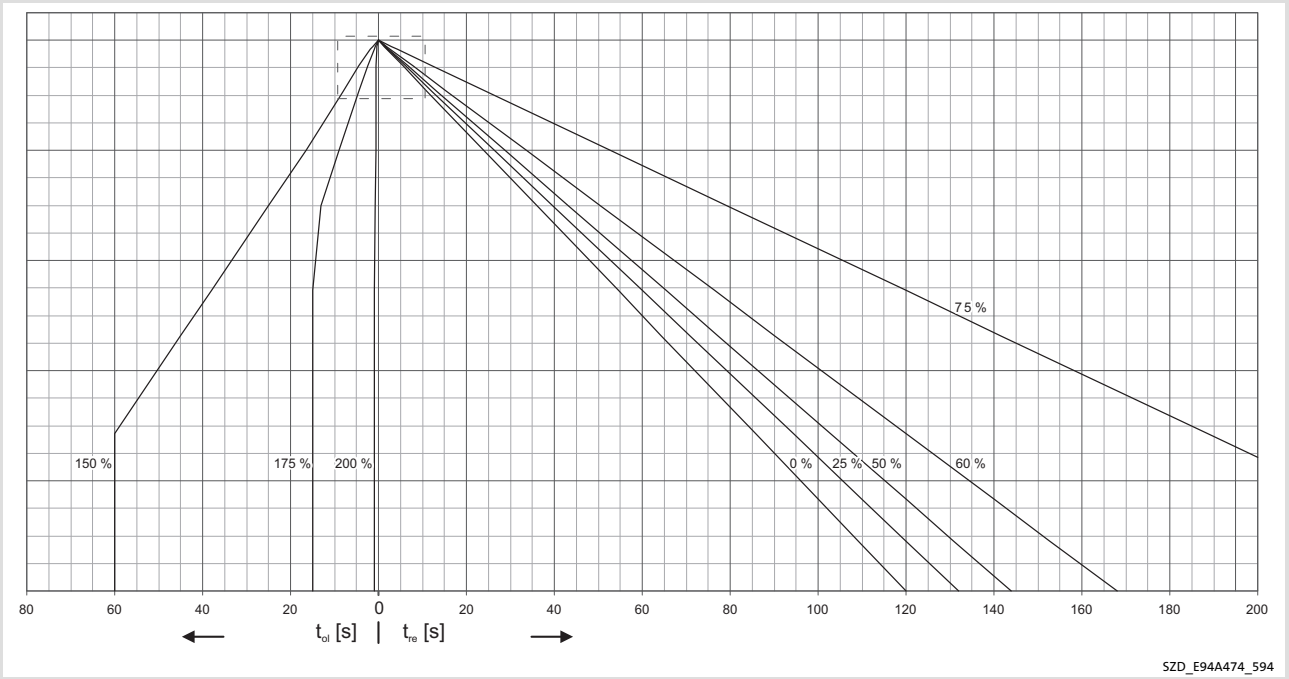

Fig. 4-6 Diagram for E94xxxE0474 and E94xxxE0594

t_{ol} Duration of the load phase
t_{re} Duration of the recovery phase

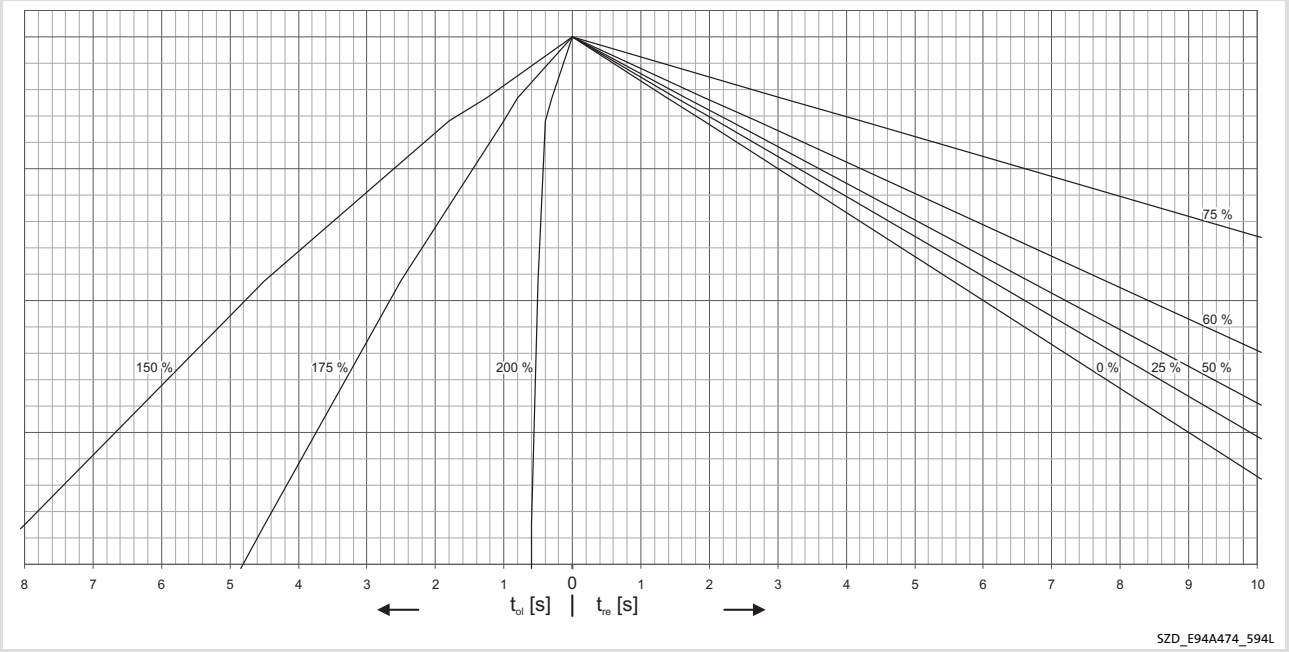

Fig. 4-7 Area cutout for E94xxxE0474 and E94xxxE0594

4.5 Device description

This page remains blank to give you a clearly arranged overview of the following subject on the next double page.

4.5.1 Devices in the range 2 ... 32 A (0.37 ... 15 kW)

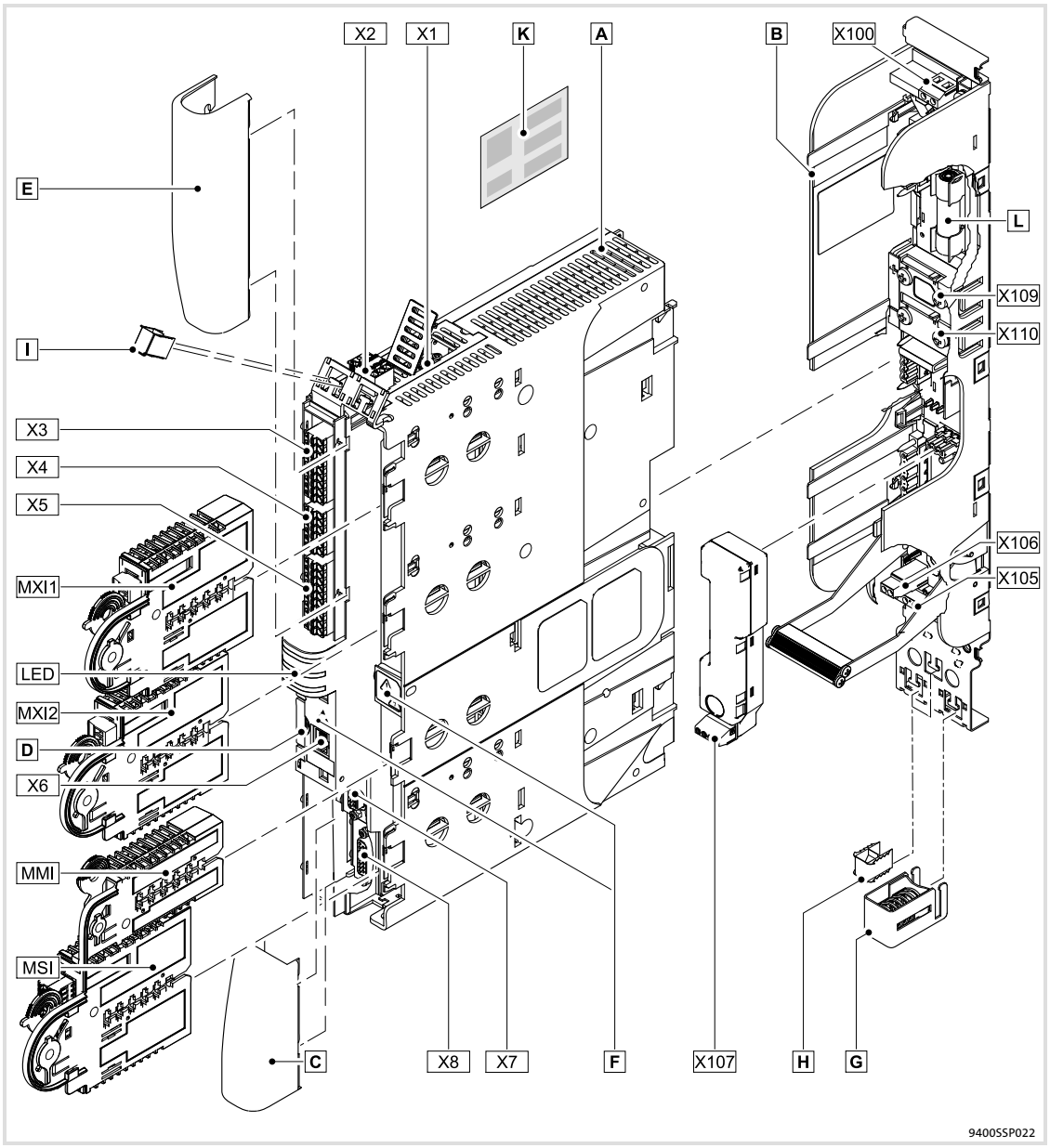

Standard device A	
Pos.	**Description**
MXI1	Module receptacle for extension 1, e.g. communication
MXI2	Module receptacle for extension 2, e.g. communication
MMI	Module receptacle for memory modules
MSI	Module receptacle for safety equipment
X1	System bus (CAN), under the cover
X2	24 V supply and statebus
X3	Analog inputs and analog outputs
X4	Digital outputs
X5	Digital inputs
X6	Diagnostics
X7	Resolver
X8	Encoder
C	Lower cover
D	Retractable nameplate
E	Upper cover
I	EMC clip
K	Prominent warning label close to the device!

The LED display enables fast indication of several operating states.

LED	Labelling	Colour	Description
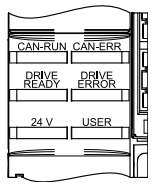 SSP94LED01	CAN-RUN	green	CAN bus ok
	CAN-ERR	red	CAN bus error
	DRIVE READY	green	Standard device is ready for operation
	DRIVE ERROR	red	Error in the standard device or application-induced
	24 V	green	24 V supply voltage ok
	USER	yellow	Message parameterised by the application

Pos.	Symbol	Description
F		**Long discharge time**: All power terminals carry hazardous electrical voltages for a longer period of time after mains disconnection! Depending on the device, this period of time may be up to 30 minutes.
		**High discharge current**: Carry out fixed installation and PE connection according to EN 61800-5-1!
		**Electrostatic sensitive devices**: Before working on the device, the personnel must be free of electrostatic charge!

Installation backplane B	
Pos.	**Description**
X100	DC-bus voltage (compatible to 9300 series)
X105	Motor
X106	Motor temperature monitoring
X107	Control of motor holding brake
X109	DC busbar +
X110	DC busbar -
G	EMC wire clamp (for device sizes 2 + 3), replaces 1 x H
H	EMC shield clamp
L	DC-bus fuse

4.5.2 Devices in the range 47 ... 59 A (22 ... 30 kW)

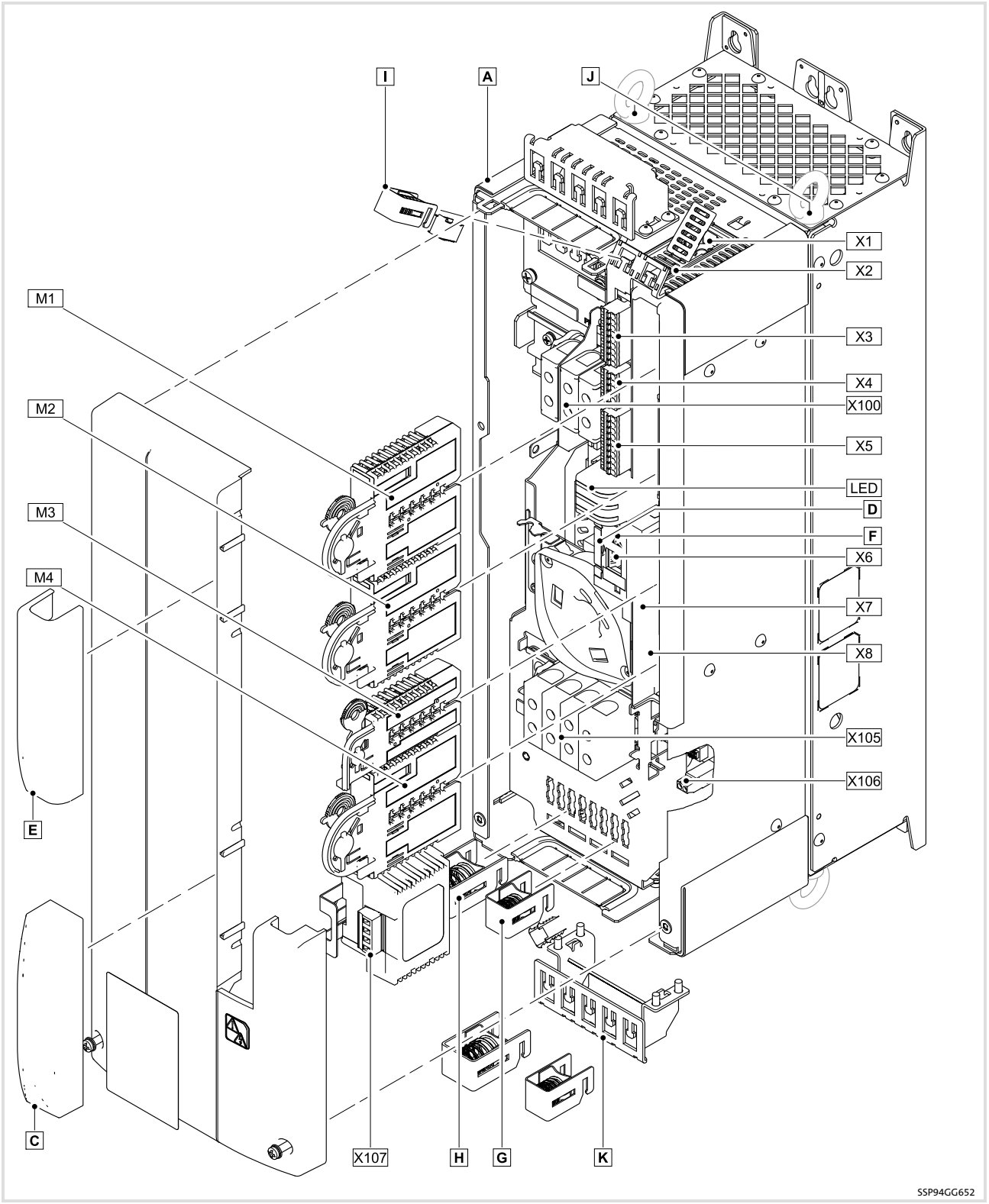

Standard device A	
Pos.	**Description**
MXI1	Module receptacle for extension 1, e.g. communication
MXI2	Module receptacle for extension 2, e.g. communication
MMI	Module receptacle for memory modules
MSI	Module receptacle for safety equipment
X1	System bus (CAN), under the cover
X2	24 V supply and statebus
X3	Analog inputs and analog outputs
X4	Digital outputs
X5	Digital inputs
X6	Diagnostics
X7	Resolver
X8	Encoder
C	Lower cover
D	Retractable nameplate
E	Upper cover
I	EMC clip
X100	DC-bus voltage
X105	Motor
X106	Motor temperature monitoring
X107	Control of motor holding brake
G H	EMC wire clamp Device size 6: ∅ 10 ... 20 mm and ∅ 15 ... 28 mm
J	Internal thread for M6 eye bolt (not included in the scope of supply)
K	Strain relief and lifting aid, removable

The LED display enables fast indication of several operating states.

LED	Labelling	Colour	Description
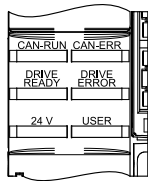 SSP94LED01	CAN-RUN	green	CAN bus ok
	CAN-ERR	red	CAN bus error
	DRIVE READY	green	Standard device is ready for operation
	DRIVE ERROR	red	Error in the standard device or application-induced
	24 V	green	24 V supply voltage ok
	USER	yellow	Message parameterised by the application

Pos.	Symbol	Description
		Long discharge time: All power terminals carry hazardous electrical voltages for a longer period of time after mains disconnection! Depending on the device, this period of time may be up to 30 minutes.
F		**High discharge current**: Carry out fixed installation and PE connection according to EN 61800-5-1!
		Electrostatic sensitive devices: Before working on the device, the personnel must be free of electrostatic charge!

4.6 Mechanical installation

4.6.1 Important notes

Note!

The devices must be installed in housings (e.g. control cabinets) to meet applicable regulations.

- The mounting location must always comply with the operating conditions specified in the technical data (📖 169). Take additional measures if necessary.
- The mounting plate of the control cabinet must have the following properties:
  – electrically conductive
  – free of lacquer
- The mechanical connections must always be ensured.
- A free air circulation must be ensured for dissipating the heat.
- The described EMC properties are provided if the following conditions are complied with:
  – The devices are mounted according to the arrangement concept described.
  – The prepared cables are used and remain unchanged.

4.6.2 Devices in the range 2 ... 32 A (0.37 ... 15 kW)

Mounting grid

We recommend to provide the mounting plate with a grid pattern of M5 threaded holes for attaching the devices. This preparation enables easy attachment of the devices, and the device sizes 1, 2, ... n can thus be mounted directly adjacent to each other.

Note!

- ► Permissible are M5 screw and washer assemblies or hexagon socket screws with washer.
- ► Tightening torque: 3.0 Nm / 26 lb-in.
- ► The screw joint in the installation backplane may jut out no more than 7 mm.

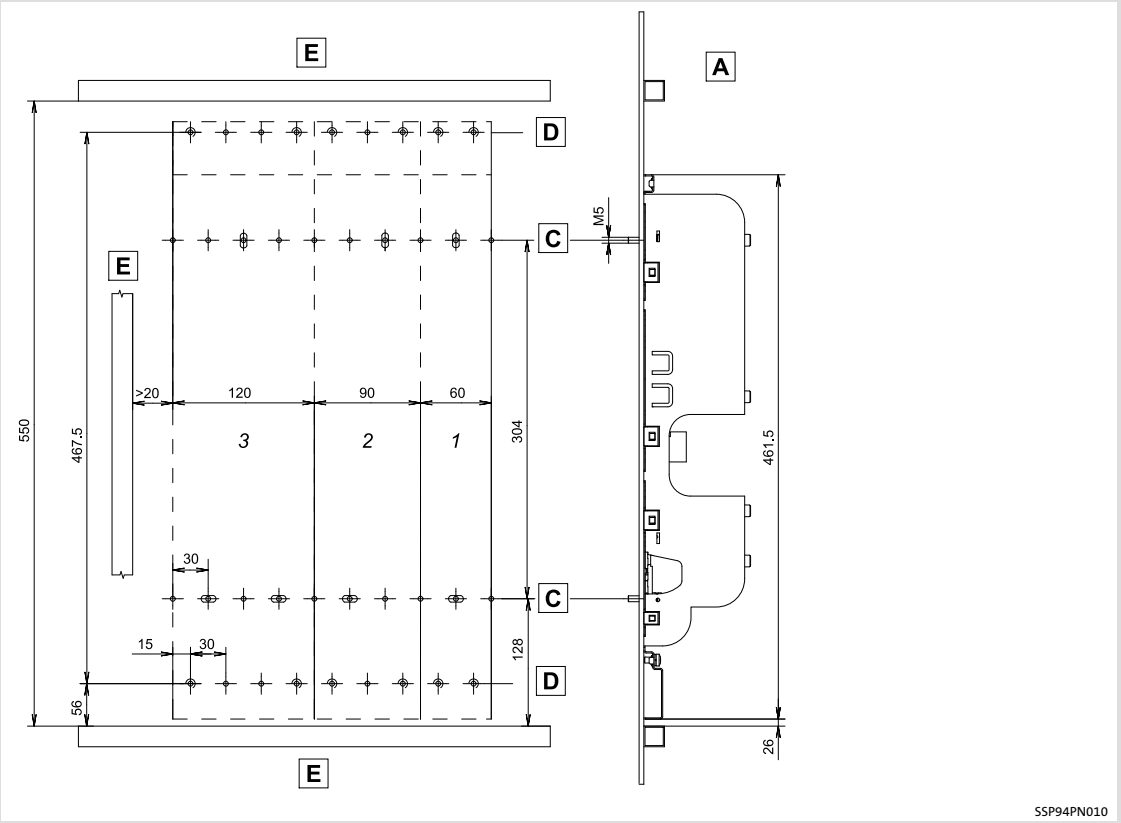

Fig. 4-8 Mounting grid for device size 1 ... 3 installation backplanes

- A Installation backplane
- C Grid hole pattern for installation backplane (M5 threaded holes)
- D Grid hole pattern for footprint filter (not relevant here)
- E Cable duct
- 1 ... 3 Device size, mounting holes used

Standard device with installation backplane

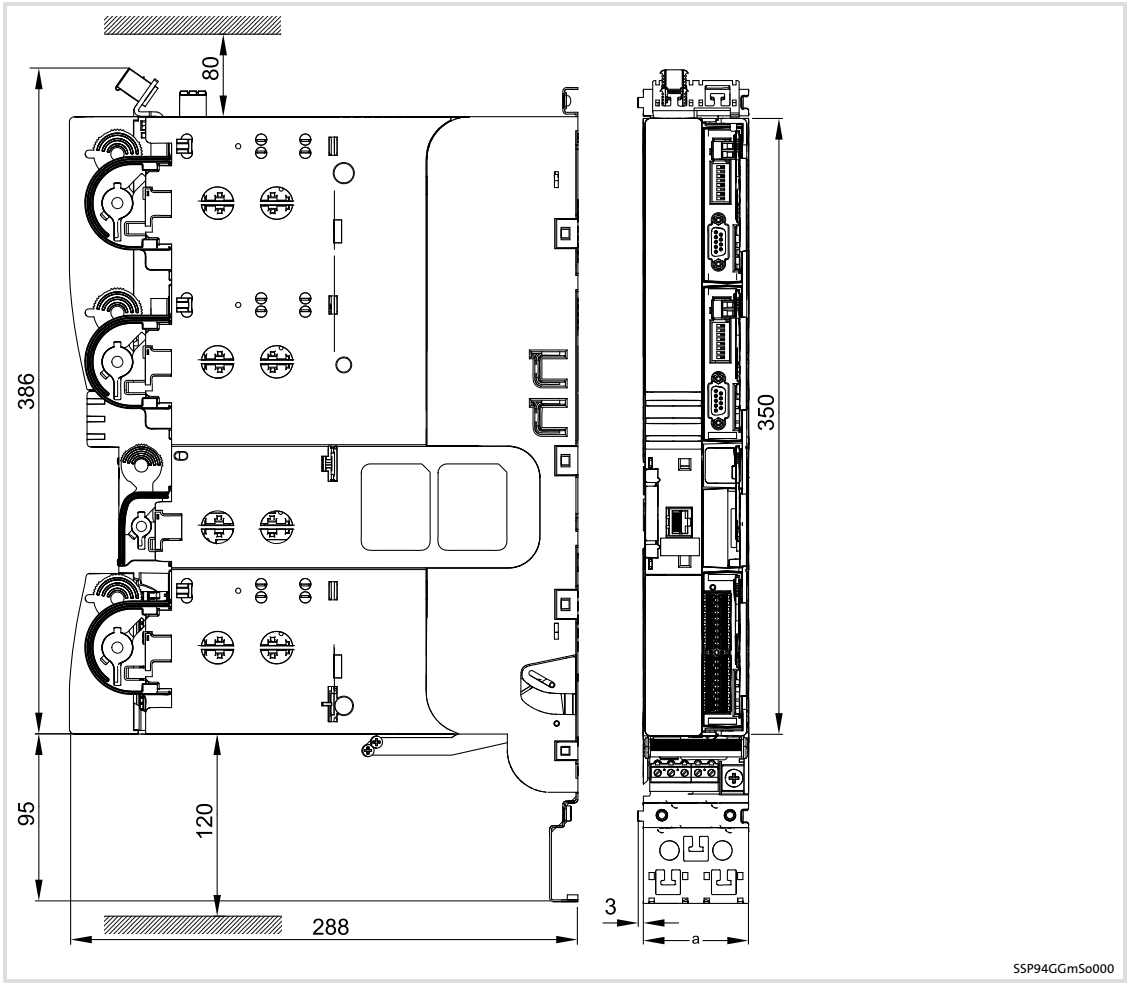

Fig. 4-9 Dimensions [mm]

Typ	Abmessung a [mm]	Masse [kg]
E94xMxE0024	60	4.0
E94xMxE0034		
E94xMxE0044		
E94xMxE0074	90	5.3
E94xMxE0094		
E94xMxE0134	120	8.1
E94xMxE0174		
E94xMxE0244		
E94xMxE0324	120	8.5

Note!

Axis modules E94xMxE0324 and installation backplane E94AZPM0324 can only be connected directly to each other! A use with another device or installation backplane of size 3 is not permissible and is prevented through a plug protection.

Please consider this when planning drive systems where the devices are mounted side by side.

Arrangement of the devices

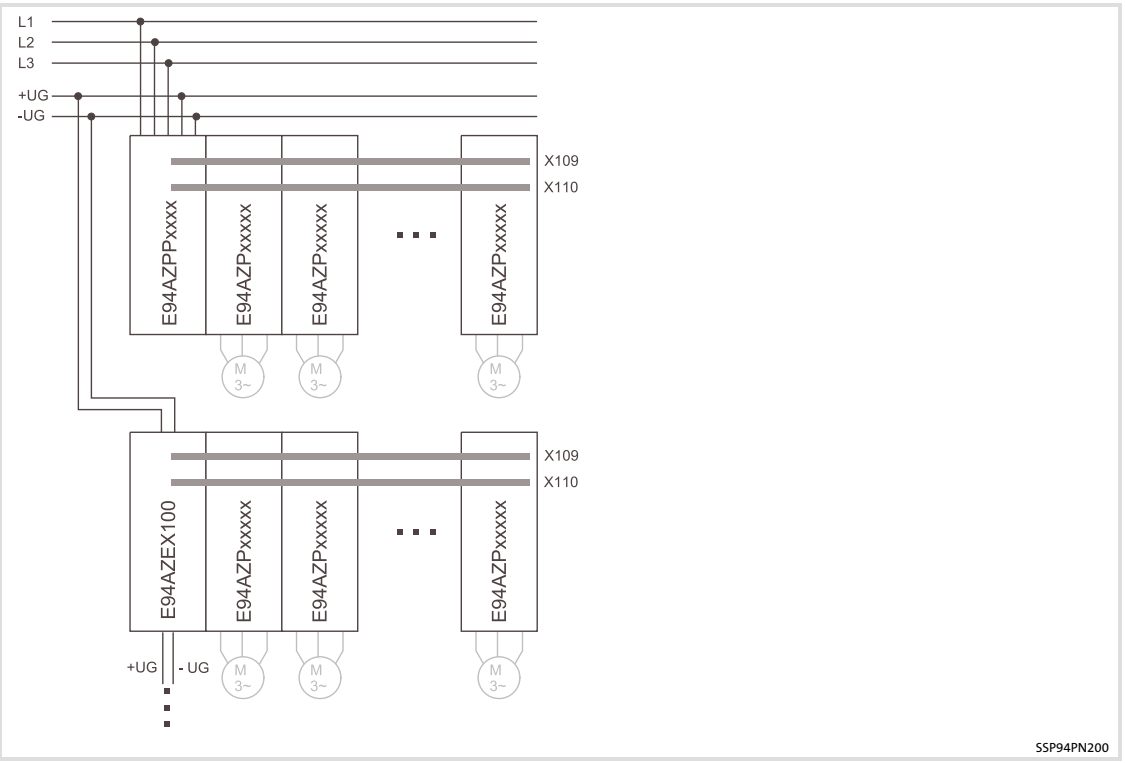

Fig. 4-10 Arrangement concept

Installation steps

Proceed as follows for installation:

1. Prepare M5 threaded holes on the mounting plate according to the mounting grid.
   – Start on the left with the mounting backplane of the E94AZPNxxxx DC power supply module or with the E94AZEX100 DC input module.
   – Install the axis modules from the left to the right with decreasing rated power.
   – Axis modules E94xMxE0324 and installation backplane E94AZPM0324 can only be connected directly to each other! A use with another device or installation backplane of size 3 is not permissible and is prevented through a plug protection.
2. Screw the mounting backplane onto the mounting plate. Do not yet tighten the screws.
   – Use M5 screw and washer assemblies or M5 hexagon socket screws with washers.
   – The screw joint in the installation backplane must not jut out more than 7 mm.
3. Align all components.
4. When busbars are used: connect busbars.
5. Screw the components onto the mounting plate.
   – Tightening torque: 3.0 Nm (26 lb-in).

4.6.3 Devices in the range 47 ... 59 A (22 ... 30 kW)

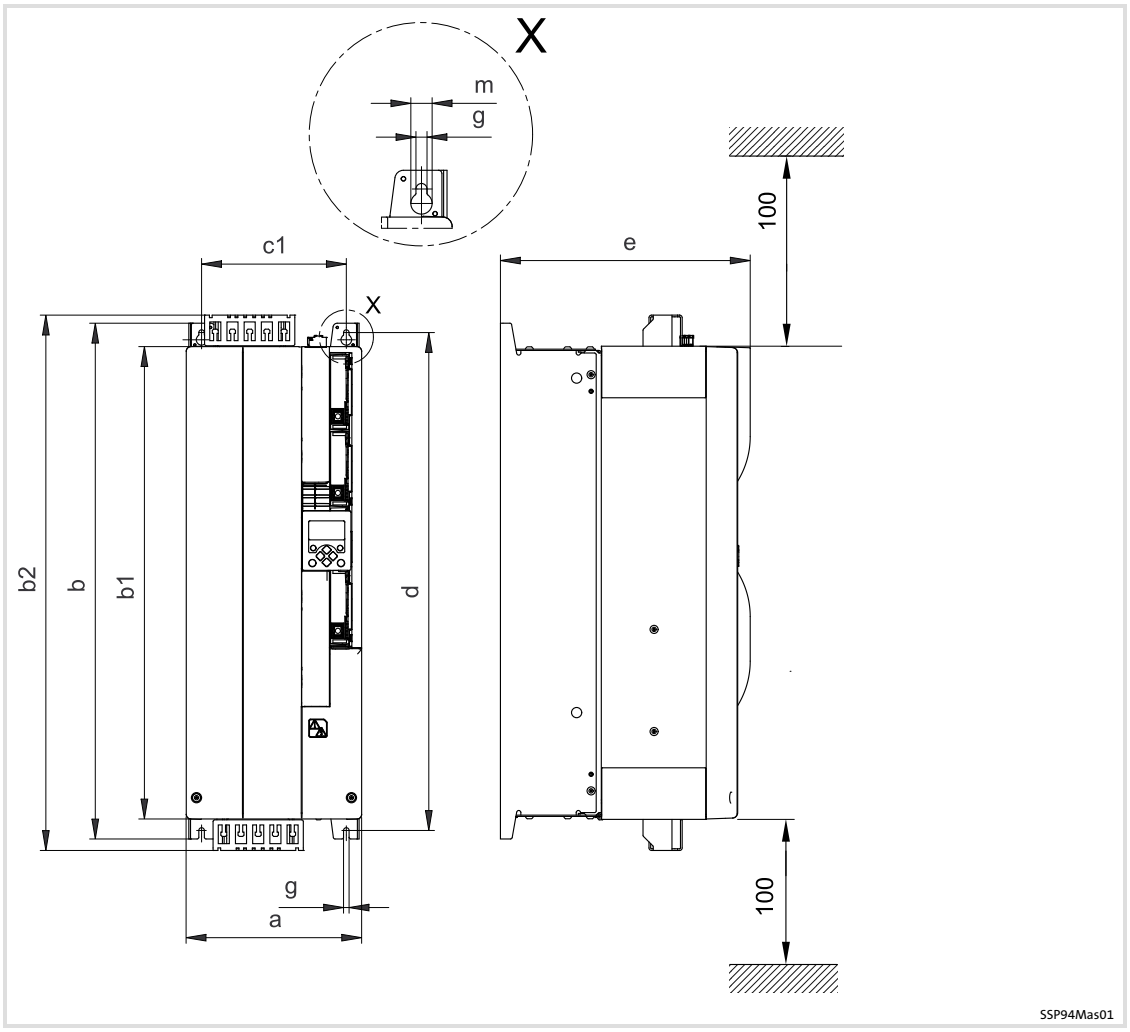

Fig. 4-11 Dimensions [mm]

Type	Dimensions [mm]									Weight [kg]	Device size
	a	b	b1	b2	e	c1	d	g	m		
E94xMxE0474	206	606	556	630	294	170	585	6.5	12.5	26.5	6
E94xMxE0594											

4.7 Wiring

4.7.1 Important notes

Danger!

Hazardous electrical voltage

All power connections carry a hazardous electrical voltage for a longer time after mains disconnection. Observe the information regarding the discharge time on the device.

Possible consequences:

► Death or severe injuries when touching the power terminals.

Protective measures:

► Before working on the power connections, wait at least until the discharge time has passed (depending on the device, this may be up to 30 minutes).

► Make sure that all power terminals are deenergised.

Danger!

Hazardous electrical voltage

The leakage current to earth (PE) is > 3.5 mA AC or > 10 mA DC.

Possible consequences:

► Death or severe injuries when touching the device in the event of an error.

Protective measures:

Implement the measures required in EN 61800-5-1. Especially:

► Fixed installation
  – Implement PE connection in compliance with standards.
  – Connect PE conductor twice or PE conductor cross-section ≥ 10 mm^2.

► Connection with a connector for industrial applications according to IEC 60309 (CEE):
  – PE conductor cross-section ≥ 2.5 mm^2 as part of a multi-core supply cable.
  – Provide for suitable strain relief.

Stop!

The device contains components that can be destroyed by electrostatic discharge!

Before working on the device, the personnel must ensure that they are free of electrostatic charge by using appropriate measures.

Stop!

No device protection if the mains voltage is too high

The mains input is not internally fused.

Possible consequences:

► Destruction of the device if the mains voltage is too high.

Protective measures:

► Observe the maximally permissible mains voltage.

► Fuse the device correctly on the supply side against mains fluctuations and voltage peaks.

Stop!

Overvoltage on components:

In case of an earth fault in IT systems, incompatible overvoltages may occur in the plant.

Possible consequences:

Destruction of the device.

Protective measures:

When using the devices in IT systems, separate the internal connection of filters to the protective earth. For this purpose carry out the device-specific measure as described.

Note!

Switching operations on the motor side of the controller are permitted for safety switch-off (emergency off).

Please observe:

► When the controller is enabled, switching operations may lead to a response of the controller monitoring functions.

► The switching elements on the motor side must be rated for DC voltages with U_{DCmax} = 800 V.

4.7.2 Safety instructions for the installation according to UL/CSA

Note!

The fuse current given in the following is the maximum permissible value. This prevents fire and electrical hazard in the event of an error of the device.

The fuse must be smaller or equal to the maximum permissible value, taking the following into consideration:

- The maximum possible cable cross-section
- the laying system (e.g. tap installation)
- the ambient temperature
- the relevant regulations (e.g. UL508A, NEC70 and others).

Original - English

Warnings!

- Branch circuit protection:
  - Suitable for use on a circuit capable of delivering not more than 100 000 rms symmetrical amperes, 480 V max., when supplied by a rectified AC-supply as an UL listed Lenze unit, cat. no. E94A
  - Suitable for motor group installation on a circuit capable of delivering not more than 100 000 rms amperes, when supplied by a rectified AC-power supply of 480 V maximum, when protected by specified fuses.
  - Suitable for motor group installation on a circuit capable of delivering not more than 50 000 rms amperes (30 000 rms Amperes with fuse type 202922...), when supplied by a rectified AC-power supply of 480/277 V maximum, when protected by specified fuses.
  - Use specified fuses as shown in the table.
  - Above Short Circuit ratings are only valid when the assembly bases are used.
  - Integral solid state short circuit protection does not provide branch circuit protection. Branch circuit protection must be provided in accordance with the National Electrical Code / Canadian Electrical Code and any additional local codes.
- The opening of the branch circuit protective device may be an indication that a fault current has been interrupted. To reduce the risk of fire or electrical shock, current-carrying parts and other components of the controller should be examined and replaced if damaged. If burnout of the current element of an overload relay occurs, the complete overload relay must be replaced.
- For information on the protection level of the internal overload protection for a motor load in percent of FLA, see the corresponding Application Manuals or Software Helps.
- For information on rating and proper connection of the thermal protector (only for connection to motors having integral thermal protection), see the corresponding Application Manuals or Software Helps.
- Max. surrounding air temperature is 45 °C.
- Max. surrounding air temperature with derating is 55 °C.
- Use 60/75 °C copper wire only, except for control circuits.
- Secondary circuit shall supplied from an external isolating source.
- These products are intended for use in a pollution degree 2 environment.
- These products are intended for use in overvoltage category III.

Assignment of devices - DC-fuses				
	+UG/-UG (X100)		Busbar (X109/X110)	
	Nominal value (max.)	Type	Nominal value (max.)	Type
Type	[A]		[A]	
E94xMxE0024 E94xMxE0034 E94xMxE0044	16	Siba 5020106.16 Siba 5020206.16	315	Eaton 170M1761 Eaton 170M1741
	63	Eaton 170M1754 Eaton 170M1734		
E94xMxE0074 E94xMxE0094	40	Siba 5020106.40 Siba 5020206.40		
	125	Eaton 170M1757 Eaton 170M1737		
E94xMxE0134 E94xMxE0174	100	Siba 2029220.100 Siba 2029221.100		
E94xMxE0244 E94xMxE0324	200	Eaton 170M1759 Eaton 170M1739		
E94xMxE0474 E94xMxE0594	315	170M1761 170M1741	-	-

Recommended fuse holder for type 170M...: Eaton (Bussmann) 170H1007

Original - French

Avertissement !

- ► Protection par disjoncteur :
  - – Convient aux circuits non susceptibles de délivrer plus de 100 000 ampères symétriques eff., maxi. 480 V max., lorsque l'alimentation est fournie par une source de CA redressé en tant qu'unité Lenze certifié UL, n° de cat. E94A.
  - – Convient aux installations de groupe moteur sur des circuits non susceptibles de délivrer plus de 50 000 ampères symétriques eff., lorsque l'alimentation est fournie par une source de CA redressé de 480/277 V maxi, et lorsque cette source est protégée par des fusibles fabriqués par Bussmann (Eaton).
  - – Convient aux installations de groupe moteur sur des circuits non susceptibles de délivrer plus de 100 000 ampères eff., lorsque l'alimentation est fournie par une source de CA redressé de 480 V maximum, et lorsque cette source est protégée par des fusibles spécifiques.
  - – Convient aux installations de groupe moteur sur des circuits non susceptibles de délivrer plus de 50 000 ampères eff. (30 000 ampères eff. avec type de fusible 202922...), lorsque l'alimentation est fournie par une source de CA redressé de 480/277 V maximum, et lorsque cette source est protégée par des fusibles spécifiques.
  - – Utiliser les fusibles spécifiés comme indiqué dans le tableau.
  - – Les courants nominaux de court-circuit ci-dessus sont valables uniquement en cas d'utilisation de plaques de montage.
  - – La protection statique intégrée n'offre pas la même protection qu'un disjoncteur. Une protection par disjoncteur externe doit être fournie, conformément au National Electrical Code / Canadian Electrical Code, et aux autres dispositions applicables au niveau local.
- ► Le déclenchement du dispositif de protection du circuit de dérivation peut être dû à une coupure qui résulte d'un courant de défaut. Pour limiter le risque d'incendie ou de choc électrique, examiner les pièces porteuses de courant et les autres éléments du contrôleur ; les remplacer s'ils sont endommagés. Le relais de surcharge doit être remplacé en cas de grillage de l'élément traversé par le courant.
- ► Pour obtenir des informations sur le niveau de protection offert par la protection intégrée contre les surcharges du moteur (pourcentage de l'intensité assignée à pleine charge), se reporter aux manuels d'application ou aux systèmes d'aide logiciels.
- ► Pour obtenir des informations sur les caractéristiques assignées et sur le câblage du dispositif de protection thermique (concerne uniquement le raccordement aux moteurs dotés d'un dispositif de protection thermique intégré), se reporter aux manuels d'application ou aux systèmes d'aide logiciels.

- ► Température ambiante maximale : 45 °C
- ► Température ambiante maximale avec réduction de puissance : 55 °C
- ► Utiliser exclusivement des conducteurs en cuivre 60/75 °C, sauf pour les circuits de commande.
- ► Prévoir un circuit auxiliaire alimenté par une source de tension avec isolation galvanique.
- ► Ces produits sont destinés à un environnement caractérisé par le degré de pollution 2.
- ► Ces produits sont conçus pour une utilisation dans la catégorie de surtension III.

Combinaison entre les appareils et les fusibles CC

	+UG/-UG (X100)		Barre conductrice (X109/X110)	
	Valeur nominale (max.)	Type	Valeur nominale (max.)	Type
Type	[A]		[A]	
E94xMxE0024 E94xMxE0034 E94xMxE0044	16	Siba 5020106.16 Siba 5020206.16	315	Eaton 170M1761 Eaton 170M1741
	63	Eaton 170M1754 Eaton 170M1734		
E94xMxE0074 E94xMxE0094	40	Siba 5020106.40 Siba 5020206.40		
	125	Eaton 170M1757 Eaton 170M1737		
E94xMxE0134 E94xMxE0174	100	Siba 2029220.100 Siba 2029221.100		
E94xMxE0244 E94xMxE0324	200	Eaton 170M1759 Eaton 170M1739		
E94xMxE0474 E94xMxE0594	315	170M1761 170M1741	-	-

Porte-fusible recommandé pour Typ 170M... : Eaton (Bussmann) 170H1007

4.7.3 Earthing of internal EMC filters

Device-internal EMC filters have been implemented to reduce interference emission. These EMC filters are connected to protective earth to discharge interference currents.

Under certain conditions the EMC filters must be disconnected from:

- Operation in an IT system

  The devices are protected from damages or destruction due to incompatible overvoltages in the case of an error (earth fault).

- DC-bus operation
- Operation with power supply modules or regenerative power supply modules
- Operating multiple devices with a common filter

  The EMC properties can only be reached by carrying out the described measures.

  The triggering behaviour of applicable earth-leakage circuit breakers remains undisturbed.

Overview of the measures

The measures which are to be carried out once have been prepared in relation to the devices and are each described together with installation and wiring.

Device (GG = device size)	Measure in the case of operation ...	
	in the IT system	in the interconnected system, with power supply modules or shared filters
Inverter		
with installation backplane (GG1 ... GG3)	Insert plastic cap elsewhere	
without installation backplane (GG6 ... GG7)	Change screwed connection	
without installation backplane (GG81 ... GG83)	Change screwed connection	
without installation backplane (GG91)	Only factory-set measures are possible. Please specify when ordering.	
Power supply modules		
with installation backplane (GG1 und GG3)	No measure necessary	
without installation backplane (GG4 ... GG5)	No measure necessary	
Regenerative power supply modules		
with installation backplane (GG3)	Insert plastic cap elsewhere	
associated mains filter	Change screwed connection	No measure necessary

Device size 1 ... 3



Fig. 4-12 Plugging the IT insulating cap onto the earthing jumper

Proceed as follows to disconnect the internal connection between the filters and PE:

1. Remove IT insulating cap from the parking position ① in the installation backplane.
   – For this apply a screwdriver on the right or left and lever off the insulating cap.
   – Optionally the insulating cap can be carefully removed using an appropriate pliers.
2. Attach IT insulating cap to the earthing jumper ② until it clicks into place.

Device size 6

Proceed as follows to disconnect the internal connection between the filters and PE:

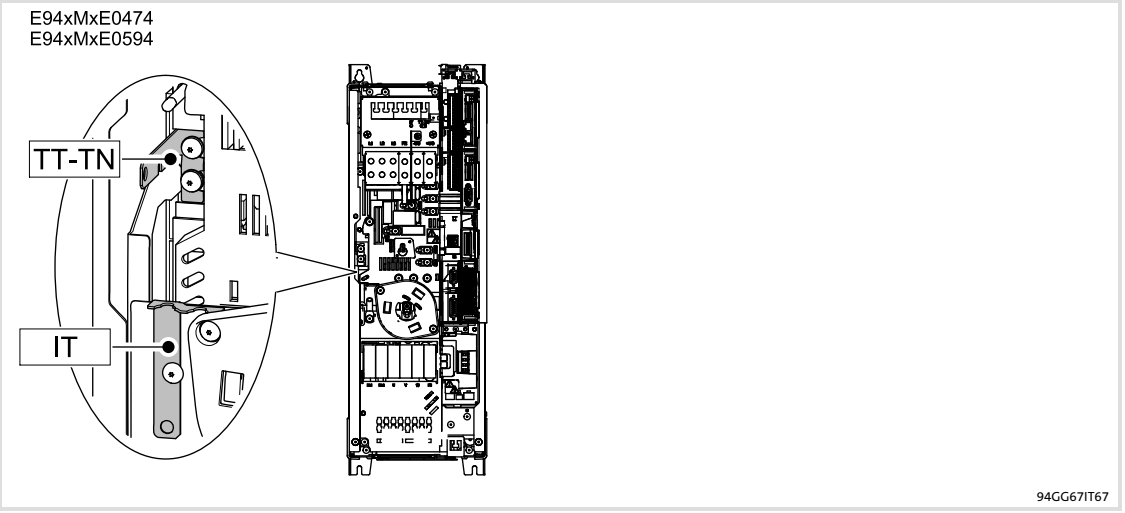

Fig. 4-13

1. Find the metal strap on the left of the device.
2. Unbolt the screws to remove the metal strap.
3. Unbolt the screw at position ”IT” and insert the metal strap.
4. Tighten all screws.
   – Tightening torque: 3.4 Nm (30 lb-in)

After this, the device is suitable for operation in IT systems.

4.7.4 Devices in the range 2 ... 32 A (0.37 ... 15 kW)

Example circuit

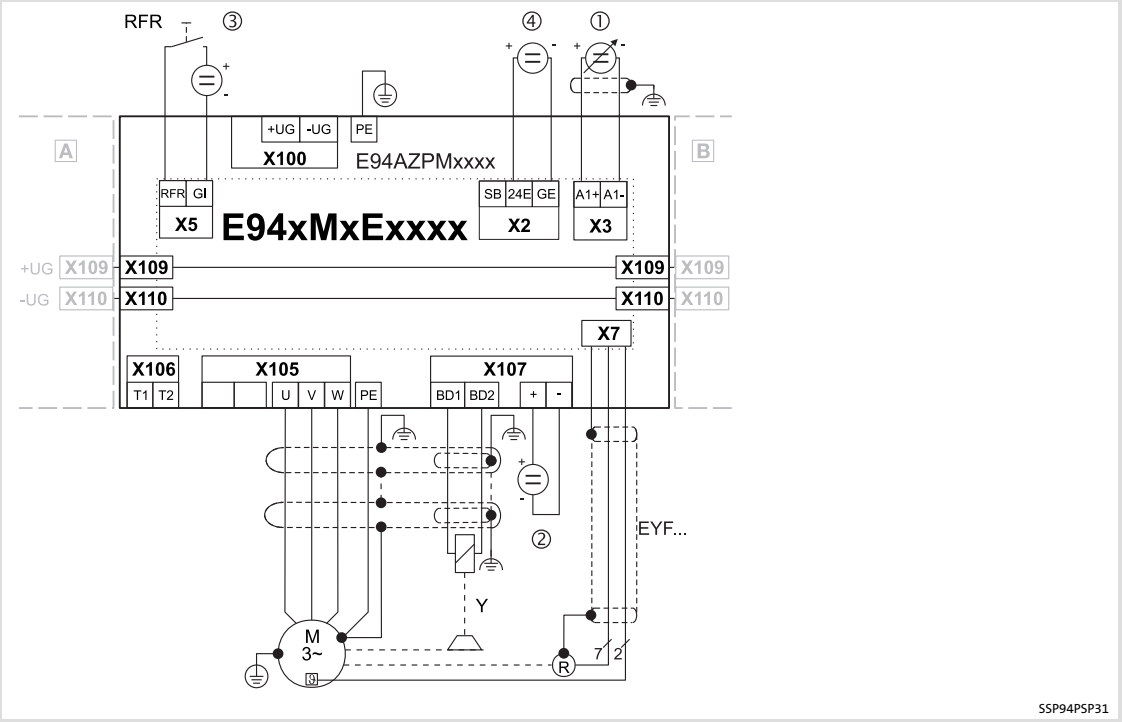

Fig. 4-14 Basic circuit diagram of the drive system

E94xMxExxxx	9400 Multi Drive servo axis module
E94AZPxxxxx	Installation backplane
A	DC power supply module or DC feeding point or axis module
B	Next axis module
⏚	HF shield termination through large-surface connection to functional earth
EYF...	System cable for resolver feedback
RFR	Controller enable
R	Resolver
Y	Motor holding brake (connected to optional motor brake control)
①	Speed setpoint selection via analog input 1 (-10 ... 0 ... +10 V)
②	Voltage source for the motor holding brake
③	24-V voltage source for the digital inputs according to IEC 61131-2
④	24-V voltage source for control electronics according to IEC 61131-2

Tip!

Complete the wiring of the installation backplane before plugging in the standard device. The upper terminals of the installation backplane cannot be connected with a plugged-in standard device.

Design of the cables

- The cables used must comply with the approvals required for the location (e.g. UL).
- The cross-section of the PE conductor must be dimensioned according to the relevant national regulations.
- The effectiveness of a shielded cable is reached by:
  - Providing a good shield connection through large-surface shield contact.
  - Using only braided shields with low shield resistance made of tin-plated or nickel-plated copper braid.
  - Using braided shields with an overlap rate > 70 % and an overlap angle of 90 °.
  - Keeping unshielded cable ends as short as possible.

Use system cables or shielded cables for these connections:

- Motor
- Motor holding brake (shielding is required when being integrated into the motor cable; connection to optional motor brake control)
- Motor temperature monitoring
- DC bus, cable length from 0.3 m

The following connections need not be shielded:

- DC bus, cable length up to 0.3 m

How to connect the shield

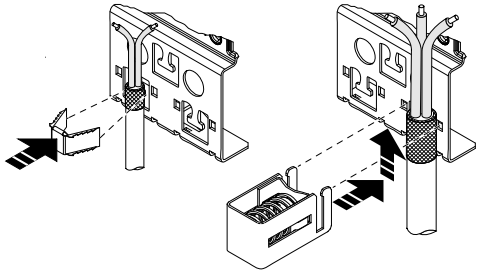

E94AZPS004

DC bus

Use the integrated DC busbars (X109 and X110) to connect the DC bus. The mounting backplane of the multi-axis controllers is already equipped with a fuse.
The busbar mounting set (accessories) can also be used to integrate single-axis controllers into a drive network. The busbar mounting set for single-axis controllers also contains the fuse required for the mounting backplane.

The DC bus is supplied via a DC supply module or a DC-feeding point which always have to be located on the left-hand side.

Compatible with the 9300 series, the DC-bus voltage can also be supplied via terminals +UG/-UG (X100, right part) for all devices.

Terminal X100 (right part)	Labelling	Description
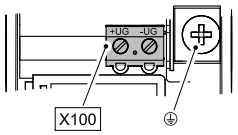	+UG -UG	Alternative option for DC-bus voltage connection (compatible to 9300 series).

Terminal data					
	Max. conductor cross-section		Tightening torque		
	[mm²]	[AWG]	[Nm]	[lb-in]	
Device sizes 1 + 2: flexible with wire end ferrule	2.5	12	0.5 ... 0.6	4.5 ... 5.3	PZ0
Device size 3: flexible with/without wire end ferrule	10/16	6	1.2 ... 1.5	10.6 ... 13.3	PH1

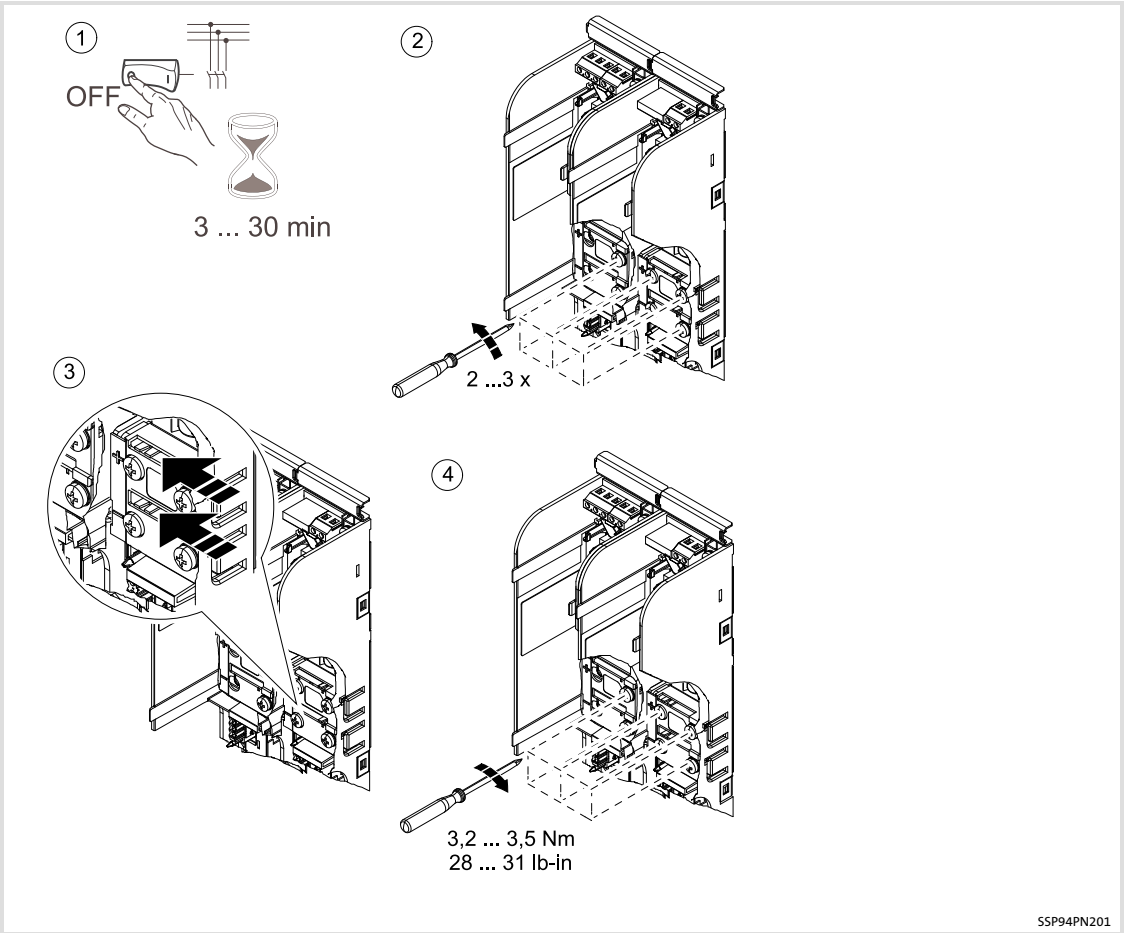

Fig. 4-15 Example: Connecting busbars

Proceed as follows to connect the busbars:

1. If devices of the interconnected system have already been in operation:
   – If necessary, switch off the supply system and wait until the discharge time has elapsed (depending on the device, this may take up to 30 minutes).
   – Make sure that all power terminals are deenergised.
2. Loosen the busbar screws (do not remove them completely).
3. Push the busbars as far as possible to the left towards the adjacent busbar.
   – Ensure that there is good contact to the adjacent busbar.
4. Tighten the busbar screws.
   – Tightening torque: 3.2 ... 3.5 Nm (28 ... 31 lb-in).
5. Screw the components onto the mounting plate, if necessary.
   – Tightening torque: 3.0 Nm (26 lb-in).

Motor

Terminal X105 (right part)	Labelling	Description
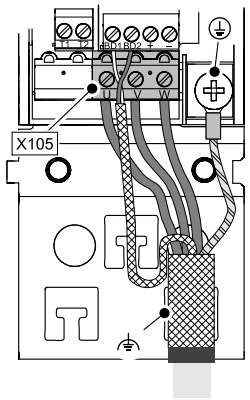 SSP940X105	U V W	Connection of the motor phases
	⏚	Functional earth Connect the shields of the motor phases and of the optional motor brake control separately and with a surface as large as possible to the shield sheet. Use EMC wire clamp or EMC shield clamp for fixing.
	⏚	Connection for the PE conductor on the motor side with M5 ring cable lug

Terminal data

	Max. conductor cross-section		Tightening torque		
	[mm²]	[AWG]	[Nm]	[lb-in]	
Device sizes 1 + 2: flexible with wire end ferrule	2.5	12	0.5 ... 0.6	4.5 ... 5.3	PZ0
Device size 3: flexible with/without wire end ferrule	10/16	6	1.2 ... 1.5	10.6 ... 13.3	PH1

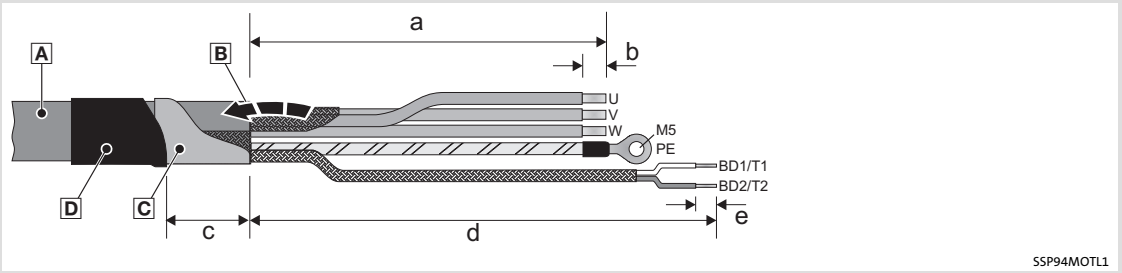

Fig. 4-16 Stripping lengths of the motor cable

	Dimensions [mm]				
Type	a	b	c	d	e
Device size 1	80	8	25	150	8
Device size 2	90	8	30	160	8
Device size 3	100	10	30	170	8

How to proceed:

1. Strip the motor cable A according to dimensions given.
2. Fold back the shield of the motor cable B over the cable sheath.
3. Stabilise the shield with self-adhesive conductive foil C (recommendation).
4. Fix the shield and conductive foil with heat-shrinkable tube D on the cable sheath.
5. Fasten cable lugs or wire end ferrules.
6. Connect the shields separately to the shield sheet using shield clamps (no strain relief).

Motor temperature monitoring

Terminal X106	Labelling	Description
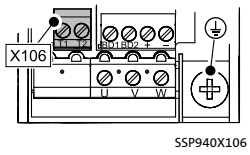 SSP940X106	T1 T2	Motor temperature monitoring with PTC element (type-A sensor, switching performance according to EN 60947-8 for type-A tripping units) or thermostat (NC contact).

Terminal data					
	Max. conductor cross-section		Tightening torque		
	[mm²]	[AWG]	[Nm]	[lb-in]	
Flexible With wire end ferrule	2.5	12	0.5 ... 0.6	4.5 ... 5.3	PZ0

Motor brake control (optional)

Note!

When the 24 V supply voltages (at X2) are applied and a motor holding brake is available, the devices respond as follows:

- ► Single Drive without mains or DC-bus voltage: The motor holding brake **cannot** be released.
- ► Multi Drive without DC-bus voltage: The motor holding brake can be released.

Tip!

For detailed information on the motor holding brake control modules, please see the chapter Accessories (📖 141).

For information on the E94AZHX0051 motor holding brake control module optionally contained in the installation backplane, please see the chapter Accessories starting on page 455.

Terminal X107	Labelling	Description
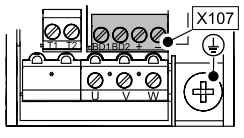 SSP940X107	BD1 BD2	Connection of the motor holding brake + (Lenze: WH) - (Lenze: BN) E94AZHX0051: 24 V DC, max. 2.5 A Observe correct polarity!
	+ / -	Supply voltage for the motor holding brake (18 ... 30 V DC) Observe correct polarity!

Terminal data					
	Max. conductor cross-section		Tightening torque		
	[mm²]	[AWG]	[Nm]	[lb-in]	
Flexible With wire end ferrule	2.5	12	0.5 ... 0.6	4.5 ... 5.3	PZ0

Stripping length or contact length: 8 mm



Stop!

The motor brake control includes an electronic switch which can control a 24 V motor holding brake.

The motor brake control may only be connected with motor holding brakes which correspond to the permissible data mentioned in the technical data. (If required, the holding brake without motor brake control must be controlled via a digital output and a coupling relay).

If the permissible data mentioned in the technical data are not complied with:

► the motor brake control can be destroyed.

► a safe operation of the motor holding brake cannot be guaranteed.

Further notes in the documentation of the standard device must be observed!



Stop!

Requirements concerning the brake cable (connection BD1/BD2):

► The brake cables must be shielded if they are incorporated in the motor cable.
  – Operation with unshielded brake cables can destroy the motor brake control.
  – We recommend the use of Lenze system cables (motor cable with separately shielded additional cores).

► When using a permanent magnet holding brake, ensure the correct polarity of the brake cable.
  – If the terminals are reversed, the brake does not release. Since the motor runs against the closed brake, the brake can be destroyed.

► Connect the shield on both sides of PE.

Requirements concerning the supply voltage U_{DC} (connection +/-):

► The motor brake control must always be supplied with a separate 24 V supply.
  – A common supply of the motor brake control and the control card of the controller is not permissible since otherwise the double insulation between both components would be reduced.

► Set U_{DC} so that the operating voltage of the brake is within the admissible range and the maximum supply voltage of the motor brake control will not be exceeded.

Installation of the standard device

How to proceed:

1. Insert the device into the installation backplane without twisting it until resistance is felt.
2. Press the device into the installation backplane until it audibly snaps into place. The locking clip moves downwards and back into the locking position.
3. The end position is reached when the locking clip can be pressed against the device. Now the device is locked.

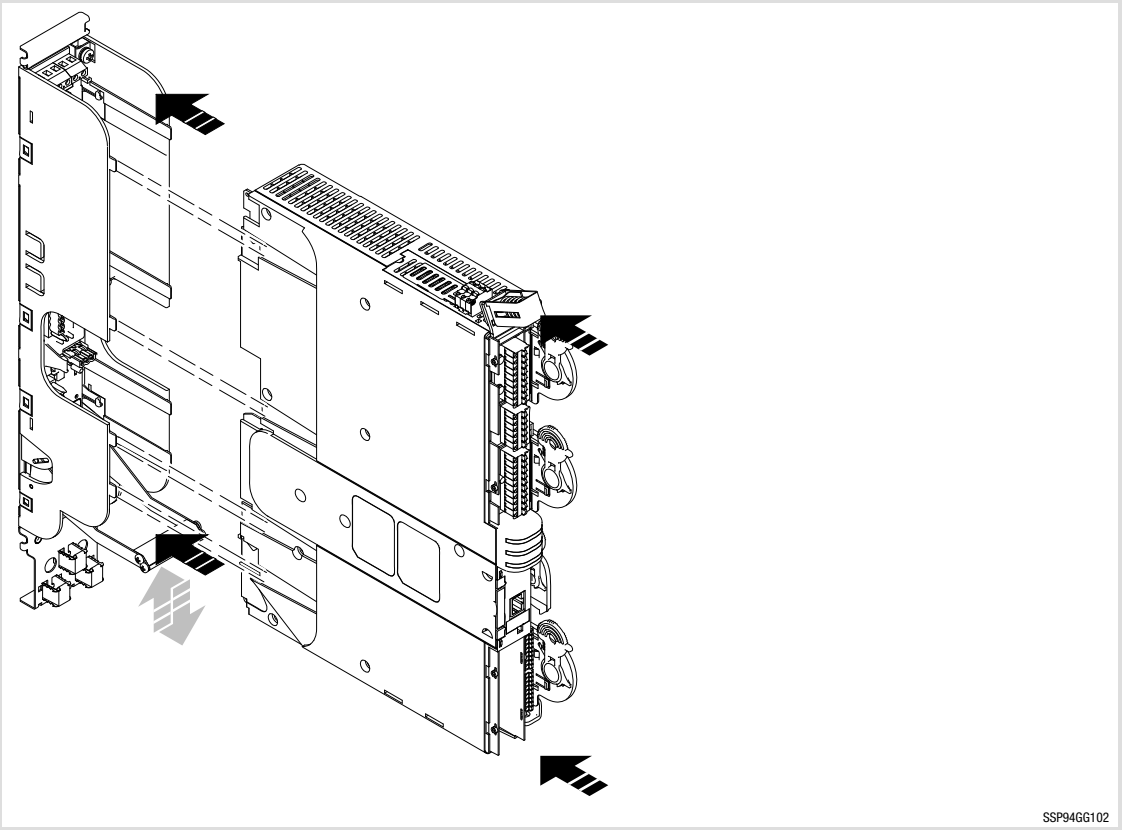

Fig. 4-17 Installation of the device

Proceed as follows to remove the device:

1. Disconnect already wired connectors at the device.
2. Push the locking clip downwards to release the device and disengage it from the contacts.
3. Pull the device completely out of the installation backplane and remove it. The locking clip moves back into the locking position.

4.7.5 Devices in the range 47 ... 59 A (22 ... 30 kW)

Example circuit

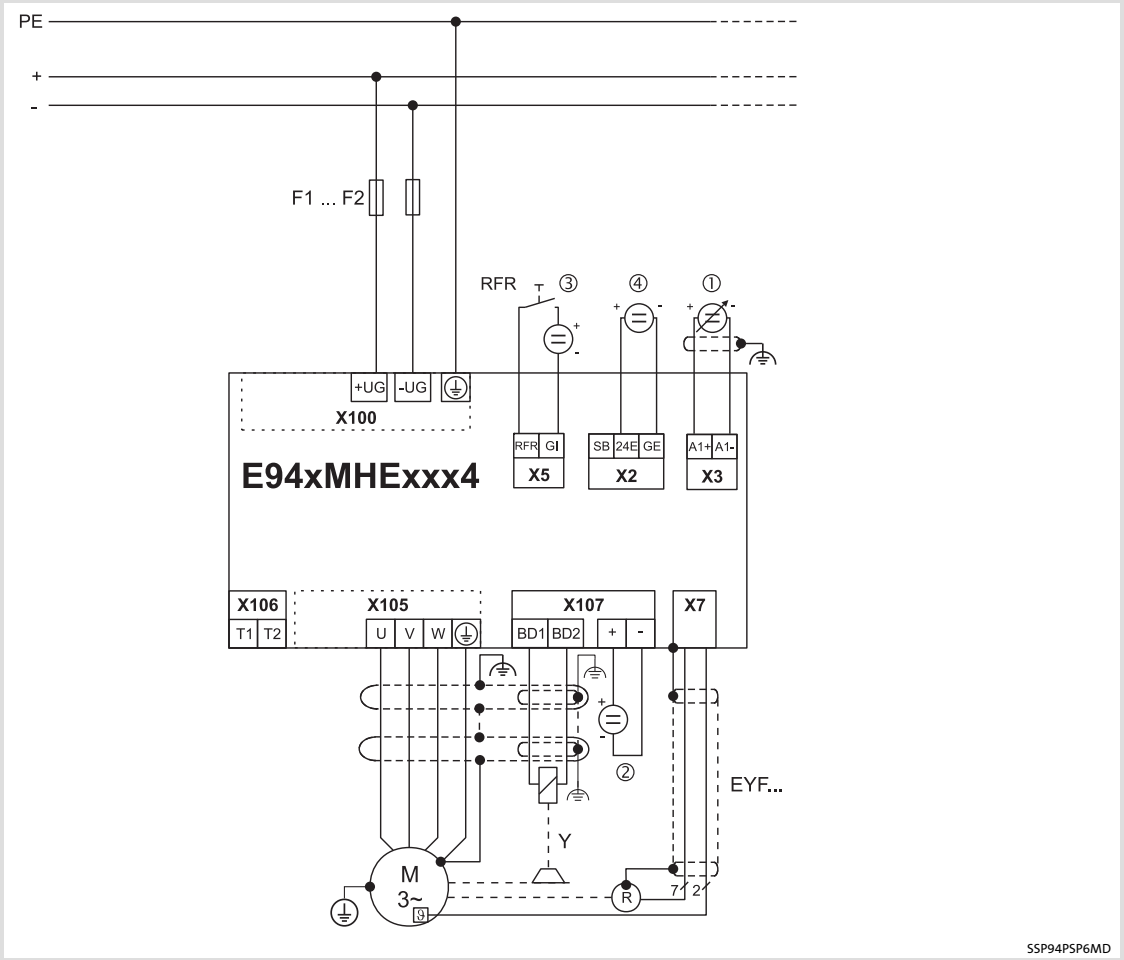

E94xMxExxxx	9400 Multi Drive servo axis module
F1 ... F2	Fuses, UL-certified types: 170M1761 or 170M1741, max. 315 A
⏚	HF-shield termination through large-surface connection to functional earth
EYF...	System cable for resolver feedback
RFR	Controller enable
R	Resolver
Y	Motor holding brake (connected to optional motor brake control)
①	Speed setpoint selection via analog input 1 (-10 ... 0 ... +10 V)
②	Voltage source for the motor holding brake
③	24 V voltage source for the digital inputs according to IEC 61131-2
④	24 V voltage source for the control electronics

Design of the cables

- The cables used must comply with the approvals required for the location (e.g. UL).
- The cross-section of the PE conductor must be dimensioned according to the relevant national regulations.
- The effectiveness of a shielded cable is reached by:
  - Providing a good shield connection through large-surface shield contact.
  - Using only braided shields with low shield resistance made of tin-plated or nickel-plated copper braid.
  - Using braided shields with an overlap rate > 70 % and an overlap angle of 90 °.
  - Keeping unshielded cable ends as short as possible.

Use system cables or shielded cables for these connections:

- Motor
- Motor holding brake (shielding is required when being integrated into the motor cable; connection to optional motor brake control)
- Motor temperature monitoring
- Analog signals (inputs and outputs)
- System bus CAN
- Resolver
- Encoder

The following connections need not be shielded:

- 24 V supply
- Digital signals (inputs and outputs)

DC bus

Terminal X100	Labelling	Description
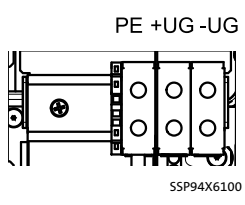 SSP94X6100	+UG -UG	DC-bus voltage connection
	PE	Connection for the PE conductor on the supply side

Terminal data					
	Max. conductor cross-section		Tightening torque		
	[mm²]	[AWG]	[Nm]	[lb-in]	
Device size 6: Flexible With wire end ferrule	50	0	10	88.5	Hexagon socket 5

Motor

Terminal X105	Labelling	Description
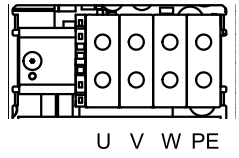 SSP94X6105	U V W	Motor phases
	PE	Connection for the motor-side PE conductor

Terminal data					
	Max. conductor cross-section		Tightening torque		
	[mm²]	[AWG]	[Nm]	[lb-in]	
Device size 6: Flexible With wire end ferrule	50	0	10	88.5	Hexagon socket 5

Motor temperature monitoring

Terminal X106	Labelling	Description
 SSP94X6106	T1 T2	Motor temperature monitoring with PTC element (type-A sensor, switching performance according to EN 60947-8 for type-A tripping units) or thermostat (NC contact).

Terminal data					
	Max. conductor cross-section		Tightening torque		
	[mm²]	[AWG]	[Nm]	[lb-in]	
flexible with wire end ferrule	2.5	12	0.5 ... 0.6	4.5 ... 5.3	Slot 0.6 x 3.5

Motor brake control (optional)

Note!

When the 24 V supply voltages (at X2) are applied and a motor holding brake is available, the devices respond as follows:

- ► Single Drive without mains or DC-bus voltage: The motor holding brake **cannot** be released.
- ► Multi Drive without DC-bus voltage: The motor holding brake can be released.

Tip!

For detailed information on the motor holding brake control modules, please see the chapter Accessories (📖 141).

For information on the E94AZHX0051 motor holding brake control module optionally contained in the installation backplane, please see the chapter Accessories starting on page 455.

Terminal X107	Labelling	Description
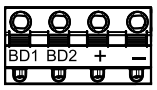 SSP94X6107	BD1 BD2	Connection of the motor holding brake + (Lenze: WH) - (Lenze: BN) E94AZHx0101: 24 V DC, max. 5.0 A Observe correct polarity!
	+ / -	Supply voltage for the motor holding brake (18 ... 30 V DC) Observe correct polarity!

Terminal data					
	Max. conductor cross-section		Tightening torque		
	[mm²]	[AWG]	[Nm]	[lb-in]	
flexible with wire end ferrule	2.5	12	0.5 ... 0.6	4.5 ... 5.3	Slot 0.6 x 3.5

4.8 Control terminals



Danger!

Hazardous electrical voltage

All power connections carry a hazardous electrical voltage for a longer time after mains disconnection. Observe the information regarding the discharge time on the device.

Possible consequences:

► Death or severe injuries when touching the power terminals.

Protective measures:

► Before working on the power connections, wait at least until the discharge time has passed (depending on the device, this may be up to 30 minutes).

► Make sure that all power terminals are deenergised.



Stop!

The device contains components that can be destroyed by electrostatic discharge!

Before working on the device, the personnel must ensure that they are free of electrostatic charge by using appropriate measures.



Tip!

Parameter setting and configuration can be carried out using the L-force »Engineer«. For this purpose the Online Help and the Software Manual for the standard device will guide you.

Design of the cables

- The cables used must comply with the approvals required for the location (e.g. UL).
- The effectiveness of a shielded cable is reached by:
  - Providing a good shield connection through large-surface shield contact.
  - Using only braided shields with low shield resistance made of tin-plated or nickel-plated copper braid.
  - Using braided shields with an overlap rate > 70 % and an overlap angle of 90 °.
  - Keeping unshielded cable ends as short as possible.

Use system cables or shielded cables for these connections:

- Analog signals (inputs and outputs)
- System bus CAN
- Resolver
- Encoder

The following connections need not be shielded:

- 24 V supply
- Digital signals (inputs and outputs)

System bus CAN on board

The drive controller has an integrated CANopen system bus interface for the exchange of process data and parameter values between different nodes and for the connection of additional modules such as distributed terminals, operator and input devices (”HMIs”) as well as external control units. The software manual contains additional information in this regard.

Overview of general data and conditions of use	
Field	**Values**
Communication profile	CANopen (DS301, V4.02)
Communication medium	CAN cable in accordance with ISO 11898-2
Network topology	Line closed at both ends (e.g. closed with Lenze system connector EWZ0046)
Node addresses that can be set	1 ... 127 (can be set by means of DIP switch or code)
Max. number of nodes	127
Transfer rates [kBit/s]	10 ... 1000 (can be set by means of DIP switch or code)
Conformity, approvals	• CE • UL • EAC

The transfer rate limits the overall cable length.

Transfer rate [kBit]	Maximum bus length [m]
10	8075
20	4012
50	1575
125	600
250	275
500	112
800	38
1000	12

The segment cable length is limited by the cable cross-section used and the number of nodes. Repeaters divide the overall cable length into segments. Without repeaters, the segment cable length is the same as the overall cable length.

Max. number of nodes per segment	**Segment length [m] in relation to cable cross-section** (Interpolation is permissible)			
	0.25 mm² (AWG 24)	0.50 mm² (AWG 21)	0.75 mm² (AWG 19)	1.00 mm² (AWG 18)
2	240	430	650	940
5	230	420	640	920
10	230	410	620	900
20	210	390	580	850
32	200	360	550	800
63	170	310	470	690
100	150	270	410	600

Terminal X1	Labelling	Description
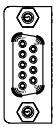 9400SSP000X1	Pin 2	CAN-LOW
	Pin 3	CAN-GND
	Pin 7	CAN-HIGH
	(Housing)	CAN-Shield

24 V supply

The controller of the ”Multi Drive” version requires a 24-V supply voltage for the control electronics. This serves to maintain the control functions, even if the DC bus is not loaded.

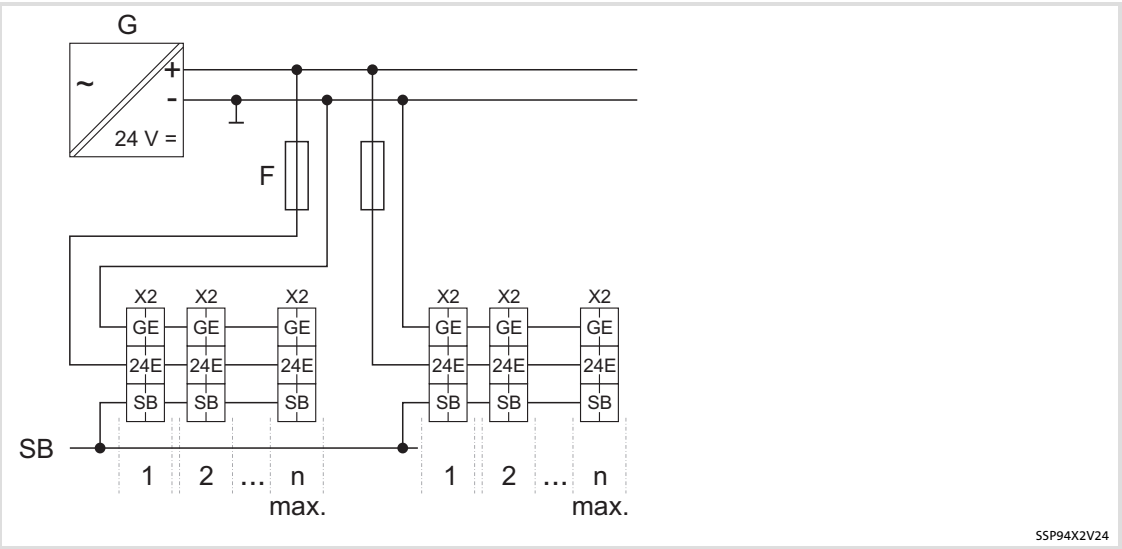

Fig. 4-18 Wiring principle

g	24 V external supply (e.g. EZV...)
F	Fuse
X2	Terminal for 24 V and state bus
GE/24E/SB	Labelling on the terminal
SB	State bus
1 ... n	E94x... device number during loop-through connection

Terminal X2	Labelling	Description
 9400SSP000X2	GE	GND external supply
	24E	24 V external supply via a safely separated power supply unit (SELV/PELV)
	SB	State bus in/out (reference GE)

Terminal data

	Conductor cross-section		Tightening torque	
	[mm²]	[AWG]	[Nm]	[lb-in]
Flexible	0.2 ... 2.5	24 ... 12	Spring terminal	
With wire end ferrule				

Electrical data		
24 V	Rated voltage	24 V According to IEC 61131-2
	Voltage range	19.2 ... 28.8 V Residual ripple max. ± 5 %
	Current consumption	Continuous operation: 2.4 A Switch-on: 4 A for 100 ms Controller enable: 4 A for 300 ms
	Fuse	Circuit breaker with tripping characteristic B or C, Standard blade-type fuses
	Looping through	Max. 7 devices with 2.5 mm² Fusing: 16/15 A
		Max. 4 devices with 1.5 mm² Fusing: 10/10 A
	Connectable cross-cuttings	See terminal data

Warnings!

Up to hardware version 1x, take the following tino consideration:
In UL-approved systems the fuse of the 24 V supply must not exceed 4 A.

State bus

The state bus is a bus system exclusively designed for Lenze controllers via which up to 20 controllers can be connected and which serves to simulate a ”release cord” function. The state is controlled via the system module SFBDigitalOutput.

- The state bus knows the states ”OK” and ”fault”.
- The state bus is multi-master-compliant, i.e. each node connected to the state bus can set the state bus to ”fault” by changing to LOW level.
- In the ”fault” status, all nodes activate their programmed response, e.g. synchronised braking of the drive system.



Stop!

Do not connect an external voltage to the state bus, otherwise the function will be disturbed.

Electrical data		
State bus	Rated voltage	24 V According to IEC 61131-2
	Switching level	According to IEC 61131-2
	LOW	0 V ... +5 V
	HIGH	+15 V ... +30 V
	Looping through	Max. 20 devices DC-bus operation with 9300 devices is possible.
	Connectable cross-cuttings	See terminal data

Analog inputs, analog outputs

The controller features two analog inputs which are able to detect differential voltage signals in the range ±10 V, e.g. an analog speed setpoint selection or the voltage signal of an external sensor (temperature, pressure, etc.).

► The analog signal 1 can also detect a current setpoint.

The controller features two analog outputs, which can output internal analog signals as voltage signals, e.g. for the control of analog indicating instruments or as a setpoint for slave drives.

Electrical data		
Analog input 1 Analog input 2	Level:	-10 ... +10 V
	Resolution:	11 bits + sign
	Scaling:	±10 V ≡ $\pm 2^{30}$
	Conversion rate:	1 kHz
Analog input 1 as current input (A1R and A1- bridged)	Level:	-20 ... +20 mA
	Resolution:	10 bits + sign
	Scaling:	For C00034 = "1" -20 ... -4 mA ≡-2^{30} ... 0 +4 ... +20 mA ≡0 ... $+2^{30}$
		For C00034 = "2" ±20 mA ≡ $\pm 2^{30}$
	Conversion rate:	1 kHz
	Open-circuit monitoring:	Configurable
Analog output 1 Analog output 2	Level:	-10 ... +10 V (max. 2 mA)
	Resolution:	11 bits + sign
	Scaling:	±10 V ≡ $\pm 2^{30}$
	Conversion rate:	1 kHz

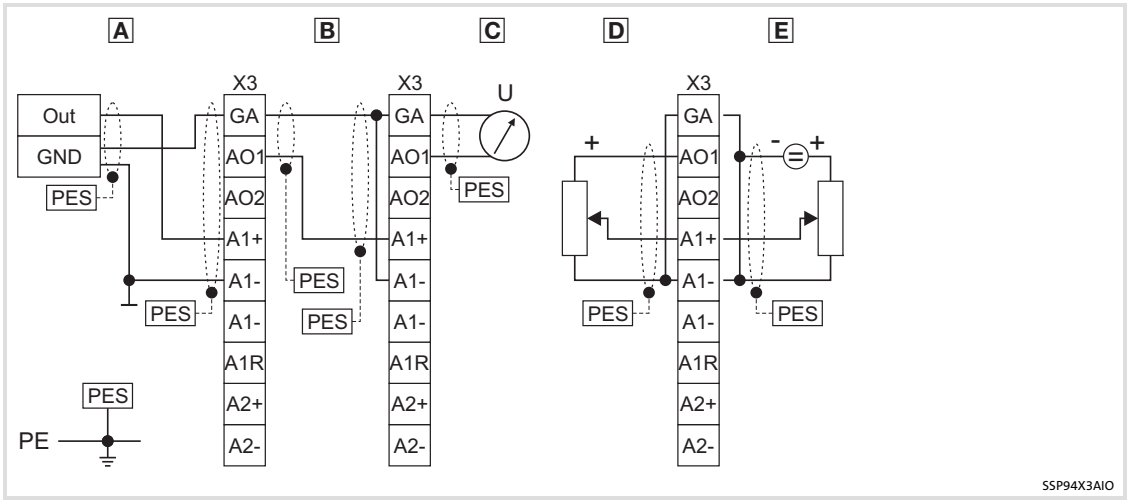

Fig. 4-19 Wiring principle

A	Wiring of an external analog signal
B	Wiring with a slave drive
C	Wiring with a measuring device
D	Potentiometer supplied by analog output 1
E	Potentiometer with external supply
Out	Analog output signal, e.g. of a control
GND	Earth reference potential
X3	Terminal for the analog inputs and outputs
PES	EMC shield connection
PE	Protective earth
U	Measuring device

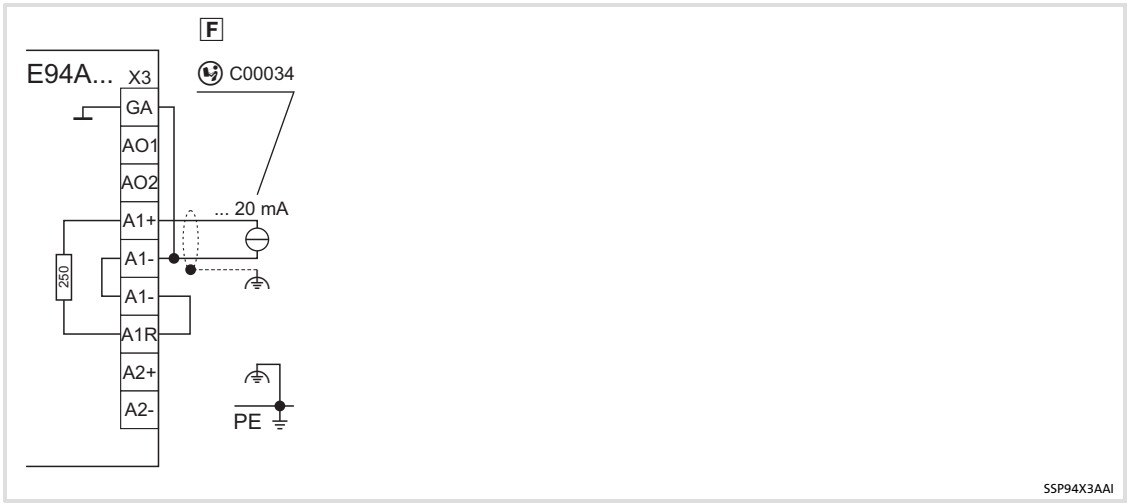

Fig. 4-20 Wiring principle of current input

- F Wiring of a current signal
- X3 Terminal for the analog inputs and outputs
- Read information on the input configuration (software manual)
- Functional earth
- PE Protective earth

Terminal X3	Labelling	Description
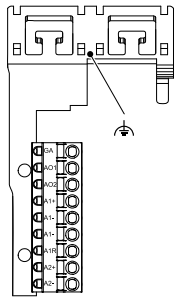 SSP94000X3	GA	GND analog signals
	AO1	Analog output 1
	AO2	Analog output 2
	A1+	Analog input 1 +
	A1-	Analog input 1 -
	A1-	Analog input 1 -
	A1R	Terminating resistor for ±20mA
	A2+	Analog input 2 +
	A2-	Analog input 2 -
	⏚	Shield connection: Fix the shield with EMC wire clamp.

Terminal data				
	Conductor cross-section		Tightening torque	
	[mm²]	[AWG]	[Nm]	[lb-in]
Flexible	0.2 ... 2.5	24 ... 12	Spring terminal	
With wire end ferrule				

Note!

If the control terminals are completely wired, we recommend to use a cable cross-section of max. 0.75 mm² to save space. The mechanical cover can then be attached.

Digital outputs

The controller features four freely configurable digital outputs.

Electrical data			
24O GO	24 V external voltage source, optional		according to IEC 61131-2 SELV/PELV
	Current consumption		Max. 300 mA
DO1 ... DO4 GO	Switching level		according to IEC 61131-2
		LOW	0 V ... +5 V
		HIGH	+15 V ... +30 V
	Output current		Max. 50 mA
	Load		> 480 Ω at 24 V

Note!

For stable digital output states, in particular during the starting phase of the controller, you must use an external 24V supply for the digital outputs.

Note!

Digital inputs and digital outputs have separated reference potentials (GI and GO). If you interconnect inputs and outputs, the reference potentials are connected as well by an external bridge.

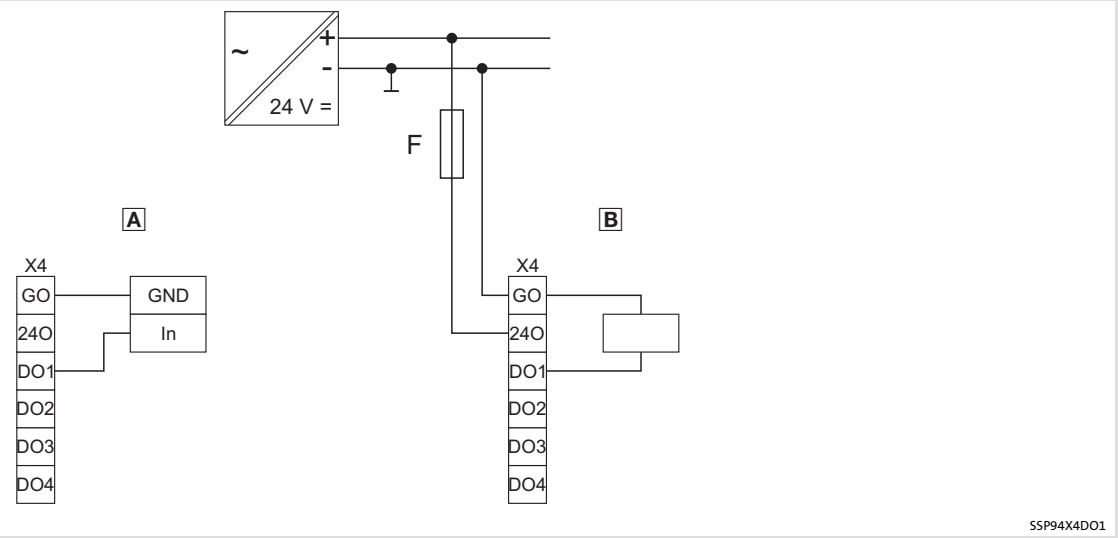

Fig. 4-21 Wiring principle

A	Wiring with a digital input, e.g. a PLC
B	Digital control (relay, valve, ...) with an external 24-V supply
X4	Terminal for the digital outputs
In	Digital input, e.g. of a control
GND	Earth reference potential
F	Fuse

Terminal X4	Labelling	Description
	GO	GND digital out
	24O	24-V digital out
	DO1	Digital output 1
	DO2	Digital output 2
	DO3	Digital output 3
9400SSP000X4	DO4	Digital output 4

Terminal data				
	Conductor cross-section		Tightening torque	
	[mm²]	[AWG]	[Nm]	[lb-in]
Flexible	0.2 ... 2.5	24 ... 12	Spring terminal	
With wire end ferrule				

Digital inputs

The controller is provided with freely configurable digital inputs which can be used for touch probe measurement (edge-controlled event).

The control input RFR for controller enable is firmly connected with the device control. It must be wired to enable the controller with a HIGH signal.

Electrical data		
24O (external voltage source, optional)	Rated voltage	24 V According to IEC 61131-2
	Current consumption	Max. 50 mA
RFR DI1 ... DI8	Switching level	According to IEC 61131-2
	LOW	0 V ... +5 V
	HIGH	+15 V ... +30 V
	Input current	Max. 8 mA

Note!

Digital inputs and digital outputs have separated reference potentials (GI and GO). If you interconnect inputs and outputs, the reference potentials are connected as well by an external bridge.

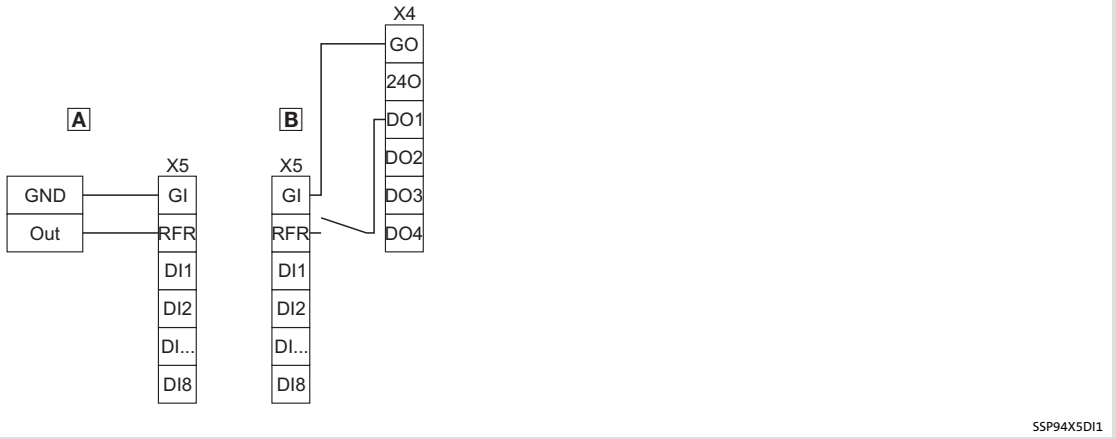

Fig. 4-22 Wiring principle

A	Wiring of an external digital signal, e.g. a PLC
B	Wiring with a slave drive
X4	Terminal for the digital outputs
X5	Terminal for the digital inputs
Out	digital output signal, e.g. of a control
GND	Earth reference potential

Terminal X5	Labelling	Description
 9400SSP000X5	GI	GND digital in
	RFR	Controller enable
	DI1	Digital input 1
	DI2	Digital input 2
	DI3	Digital input 3
	DI4	Digital input 4
	DI5	Digital input 5
	DI6	Digital input 6
	DI7	Digital input 7
	DI8	Digital input 8

Terminal data				
	Conductor cross-section		Tightening torque	
	[mm²]	[AWG]	[Nm]	[lb-in]
Flexible	0.2 ... 2.5	24 ... 12	Spring terminal	
With wire end ferrule				

Diagnostics/keypad

The following can be connected to this interface:

► USB diagnostic adapter E94AZCUS

or

► Keypad E94AZKAE.

The diagnostic adapter and a computer with the Lenze software »Engineer« serve to carry out comprehensive settings, e.g. for initial commissioning.

The keypad enables experienced users to check or change individual settings.

Terminal X6	Labelling	Description
 9400SSP000X6		Internal interface, RJ69 socket, for keypad or diagnostic adapter

Resolver

Resolvers are connected to X7 (9-pole Sub-D socket).

The use of third-party resolvers is permissible. For this purpose the number of pole pairs of the resolver in C00080 must be adapted to the resolver used. When the stator coils are excited with 4 kHz, the apparent impedance of the connected resolver must not fall below 65 Ohm. When lower impedances are connected, the overload protection integrated in the resolver output limits the output current and can falsify the resolver evaluation.

Resolvers are operated in reverse mode:

- Supply to the sine and cosine track,
- Both signals are controlled in a way that the current flow on the reference track is reduced to zero.

Electrical data		
General	Cable length (system cable recommended)	max. 150 m (100 m [1])
V_{CC}, -KTY (GND)	Supply voltage	5 V
	Maximum output current	110 mA
+REF, -REF	Input frequency	Max. 250 kHz
+COS, -COS +SIN, -SIN	Excitation voltage	10 V_{SS}
	Carrier frequency	4 kHz, fix
+KTY, -KTY	Type	KTY 83-110

[1] If safety functions with SM301 are used which require safe speed and position detection.

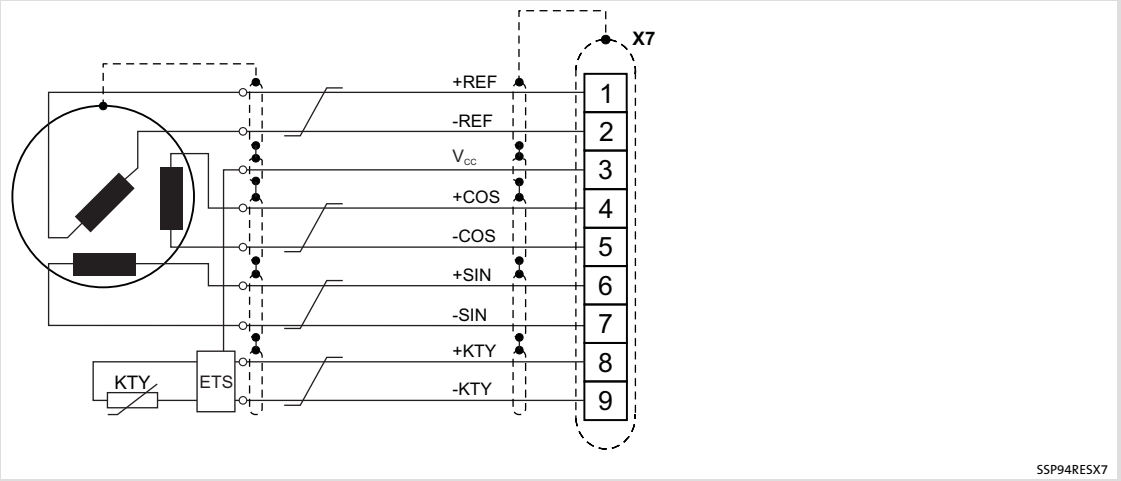

Fig. 4-23 Wiring principle

Terminal X7	Labelling	Description
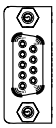	1	+REF
	2	-REF
	3	V_{CC}
	4	+COS
	5	-COS
	6	+SIN
	7	-SIN
	8	+KTY
9400SSP000X7	9	-KTY

Encoder

Encoders are connected to X8 (15-pole Sub-D socket).

- Absolute and incremental encoders are supported:
  - TTL encoder 5 V (incremental)
  - Sin/cos encoder 1 V_{ss} (incremental)
  - Sin/cos absolute value encoder 1 V_{ss} with Hiperface protocol
  - Sin/cos absolute value encoder 1 V_{ss} with EnDat protocol (2.1)
  - SSI load encoder with Stegmann protocol (as of 9400 with firmware 05.00)
- Improved determination of low speeds with TTL encoders through additional time measuring method.
- SinCos absolute value encoders are serially read during initialisation (power-on). After this, the sin/cos signals are evaluated.
- Open-circuit monitoring:
  - for sin/cos encoders by comparing the sin/cos signals with the sine shape (radius monitoring)
  - for TTL encoders by means of mean value and amplitude monitoring
  - not with SSI encoders
- The following encoders are not supported:
  - HTL encoders

Electrical data			
General	Cable length (system cable recommended)		max. 150 m (100 m [1])
	Encoder types		TTL 1 V_{SS}
	Protocols		Hiperface EnDat 2.1 SSI-Stegmann
	Number of increments		1 ... 16384
	Input frequency		max. 500 kHz
VCC (GND)	Supply voltage		5 V ... 12 V
	Max. load capacity,	5 ... 9 V	330 mA
		9 ... 12 V	3 W
		at 12 V	250 mA
+Sense, -Sense	Measuring lead for readjusting V_{CC}		
+KTY, -KTY	Type		KTY 83-110

[1] If safety functions with SM301 are used which require safe speed and position detection.

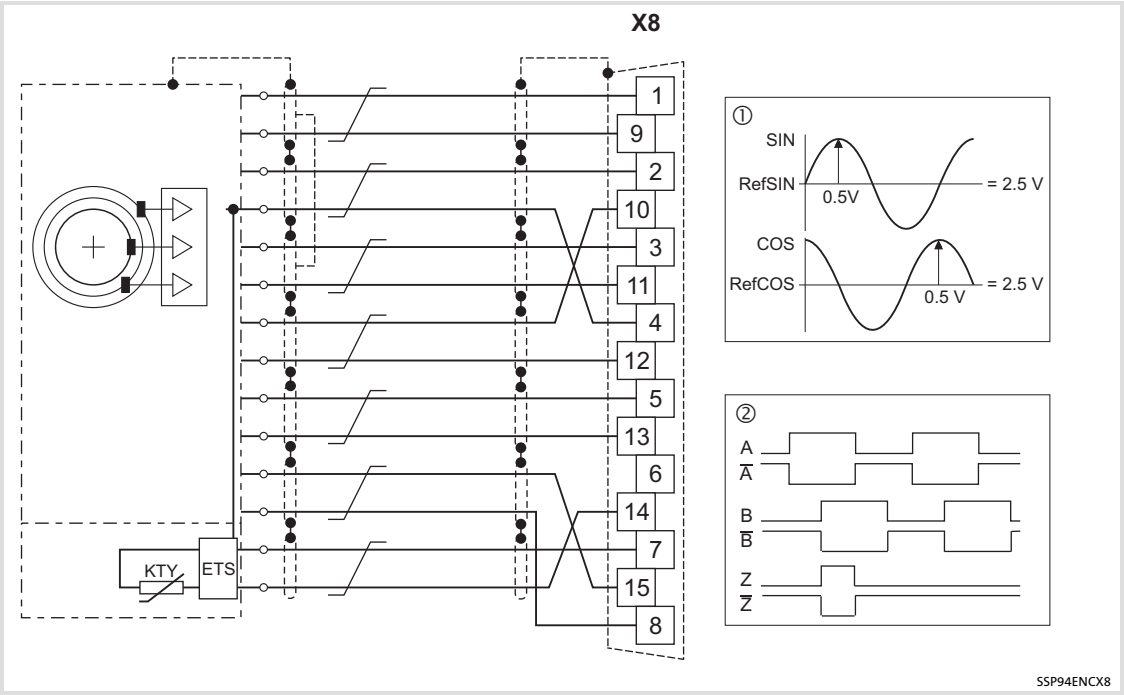

Fig. 4-24 Wiring principle

① Signals of a sin/cos encoder
② Signals with CW rotation

Terminal X8	Pin	Description				
		Cable EYF001...			EYF002...	
		TTL	1 V_{SS}	1 V_{SS} Hiperface	1 V_{SS} EnDat 2.1	SSI
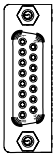	1	A	Cos	Cos	Cos	n. c.
	2	GND	GND	GND	GND	GND
	3	B	Sin	Sin	SIN	n. c.
	4	V_{CC}	V_{CC}	V_{CC}	V_{CC}	U_S
	5	Z	Z	+RS485	Data (Z)	Data +
	6	n. c.	n. c.	n. c.	n. c.	n. c.
	7	-KTY	-KTY	-KTY	-KTY	-KTY
	8	n. c.	n. c.	n. c.	Clock	Clock +
	9	/A	Ref Cos	Ref Cos	Ref Cos	n. c.
	10	n. c.	n. c.	n. c.	-Sense	n. c.
	11	/B	Ref SIN	Ref SIN	Ref SIN	n. c.
	12	n. c.	n. c.	n. c.	+Sense	n. c.
	13	/Z	/Z	-RS485	/Data (/Z)	Data -
	14	+KTY	+KTY	+KTY	+KTY	+KTY
9400SSP000X8	15	n. c.	n. c.	n. c.	/Clock	Clock -

Setting the supply voltage

The supply voltage of the encoder must be adapted to the cable length.

The voltage is adapted by means of the parameter ”Encoder voltage”, C00421.

Encoder	U_r	Voltage setting [V] in C00421 for cable length [m]						
Product key	[V]	0 - 10	10 - 30	30 - 50	50 - 70	70 - 90	90 - 100	100 -150
TTL								
IG2048-5V-T	5 ±5%	5.0	5.0	5.1	5.1	5.2	5.2	5.3
IG4096-5V-T								
IK2048-5V-T								
Sin-cos								
IG1024-5V-V	5 ±5%	5.0	5.0	5.1	5.1	5.2	5.2	5.3
IG2048-5V-S								
Sin-cos (Hiperface)								
AM1024-8V-H	8 (7 ... 12)	8.0						
Sin-cos (Endat)								
AM32-5V-E	5 ±5%	5.0						
AS2048-5V-E								
AM2048-5V-E								

Tab. 4-2

U_r Rated encoder voltage

The values listed in Tab. 4-2 are valid for the use of Lenze system cables at typical ambient temperatures.

Other cables, other cable cross-sections or extreme ambient temperatures can require metrologically determined adaptations.

For a higher encoder supply power, e.g. for laser-based length measuring systems, an external encoder supply must be provided.

4.9 Device modules

Depending on the device version or the application, the device is equipped with device modules. A nameplate attached to the side of the device serves to identify the already equipped device modules .

The possible modules are briefly described in the Accessories chapter. Detailed information can be found in the respective documentation.

4.10 Preparing the commissioning procedure

For commissioning you require:

- A computer with Windows® operating system (XP or 2000)
- The Lenze PC software »Engineer«
- A connection to the controller via an interface, e.g.:
  – Diagnostic interface X6 with USB diagnostic adapter
  – System bus CAN
  – Communication modules in the extension slots MXI1/MXI2
- The Software Manual for the technology application used
- The Communication Manual for the automation platform network
- 24-V voltage supply for control electronics of the controller
- DC-bus voltage

Follow the software instructions and/or read the documentation.

5 Power supply module

5.1 Device features

The most important device features at a glance:

- Power supply modules supply the DC buses of several controllers of a drive system with energy.
- Power supply modules are the central AC mains connection in a DC-bus operation.
- Power supply modules have an internal brake chopper and a terminal for a brake resistor.
- Power supply modules of the 9400 series have a busbar port for the easy connection and side-by-side mounting of the 9400 controllers up to 100 A. Ports for higher currents or compatible device series are available.
- Power supply modules generally supply controllers of the ”Multi Drive” version. However, also controllers of the ”Single Drive” version can be implemented in a DC-bus operation if the data and notes in the ”DC-bus operation” chapter are observed.
- Power supply modules are designed as multi-range voltage units (230/400/480 V).
- Four types of power supply modules are available:
  - **E94APNE0104**,
    Rated current: 10 A,
    Device size: 1,
    Version: compact standard device with installation backplane
  - **E94APNE0364**,
    Rated current: 36 A,
    Device size: 3,
    Version: compact standard device with installation backplane
  - **E94APNE1004**,
    Rated current: 100 A,
    Device size: 4,
    Version: compact total device
  - **E94APNE2454**,
    Rated current: 245 A,
    Device size: 5,
    Version: compact total device
- Power supply modules are assigned to specially designed mains filters and RFI filters.
- Power supply modules and filters can be mounted in the mounting grid of the 9400 series.

5.2 General data and operating conditions

General data

Conformity and approval			
Conformity			
CE	2014/35/EU	Low-Voltage Directive	
CE	2014/30/EU	EMC Directive	
EAC	TP TC 004/2011 (TP ZU 004/2011)	Regarding the safety of low-voltage equipment	Eurasian conformity TR ZU: Technical regulation of the tariff union
EAC	TP TC 020/2011 (TP ZU 020/2011)	Electromagnetic compatibility of technical products	Eurasian conformity TR ZU: Technical regulation of the tariff union
Approval			
$_{C}UL_{US}$	UL61800-5-1	Industrial Control Equipment (File No. E132659) for USA	
	CSA C22.2 No. 274-13	Industrial Control Equipment (File No. E132659) for Canada	

Mains data		
Mains types	With earthed Y point	Unrestricted use
	IT systems	Unrestricted use Observe instructions about special measures concerning the axis controllers connected!
Noise emission	EN 61800-3	Conducted: cannot be specified because dependent on the conditions present in the interconnected system
		Radiation: category C3
Noise immunity (in accordance with EN 61800-3)		
Electrostatic discharge (ESD)	EN 61000-4-2	8 kV with air discharge, 4 kV with contact discharge to housing
High frequency		
Cable-guided	EN 61000-4-6	150 kHz ... 80 MHz, 10 V/m 80 % AM (1kHz)
Interference (housing)	EN 61000-4-3	80 MHz ... 1000 MHz, 10 V/m 80 % AM (1kHz)

Protection of persons and devices			
Enclosure	EN 60529	IP 20	Not in the wire range of the lower terminals
	NEMA 250	Protection against contact in accordance with type 1	
Insulation resistance	EN 61800-5-1	Overvoltage category III from 2000 m amsl: external measures for complying with the overvoltage category II are required, e.g. ● connecting isolating transformer upstream ● connecting overvoltage protection system upstream	
Insulation of control circuits	EN 61800-5-1	up to 2000 m amsl: Safe mains isolation by double/reinforced insulation for mains with neutral earthing with a rated voltage for the external conductor/star point up to 300 V. from 2000 m amsl: If an overvoltage protection system is connected upstream, additional external separating measures are required for maintaining the safe mains isolation.	
Short-circuit strength	EN 61800-5-1	DC-bus connection: Not short-circuit-proof Brake resistor connection: without restrictions Control connections: without restrictions	
Discharge current	EN 61800-5-1	> 3.5 mA	Observe regulations and safety instructions!
Cyclic mains switching		Cyclic mains switching of 5 times in 5 minutes is permissible without restrictions.	

Design		
Housing		
Carrier housing	Device sizes 1 and 3	Glass-fiber reinforced plastic
Carrier housing	Device sizes 4 and 5	Metal
Dimensions		see ”Mechanical installation”
Weight		see ”Mechanical installation”

Mounting conditions		
Mounting place		in the control cabinet
Mounting position		vertical
Clearance		
above/beneath		Comply with the device-relating mounting instructions.
at the side		Can be installed in a row without any clearance

Connection conditions for DC power supply module		
AC mains operation		Direct connection
DC-bus operation		Direct connection of axis modules via terminals or busbar system More information can be found in the Hardware Manual, chapter ”DC-bus operation”.

Operating conditions

Environmental conditions		
Climate		
Storage	IEC/EN 60721-3-1	1K3 (-25 ... +60 °C)
Transport	IEC/EN 60721-3-2	2K3 (-25 ... +70 °C)
Operation	IEC/EN 60721-3-3	3K3 (-10 ... +55 °C) Current derating from +45 ... +55 °C: 2.5 %/°C
Site altitude		0 ... 4000 m amsl 1000 ... 4000 m amsl: current derating of 5 %/1000 m
Pollution	EN 61800-5-1	Degree of pollution 2
Vibration resistance (9.81 m/s² = 1 g)		
Transport	IEC/EN 60721-3-2	2M2
	EN 61800-2	2 ... 9 Hz: Amplitude 3.5 mm
		10 ... 200 Hz: acceleration resistant up to 10 m/s²
		200 ... 500 Hz: acceleration resistant up to 15 m/s²
Operation	Germanischer Lloyd	5 ... 13.2 Hz: Amplitude ±1 mm 13.2 ... 100 Hz: acceleration resistant up to 0.7 g
	IEC/EN 60068-2-6	10 ... 57 Hz: Amplitude 0.075 mm
		57 ... 150 Hz: Acceleration resistant up to 1 g

Assignment of filters to standard devices

DC power supply module	Mains filter (corresponds to "long distance")	RFI filter (corresponds to "short distance")	Mains choke
E94APNE0104	E94AZMP0084	E94AZRP0084	EZAELN3008B372
E94APNE0364	E94AZMP0294	E94AZRP0294	EZAELN3030B961
E94APNE1004	E94AZMP0824	E94AZRP0824	EZAELN3080B371
E94APNE2454	E94AZMP2004	E94AZRP2004	EZAELN3200B151

With RFI filters, EMC categories can be achieved.

With mains filters, EMC categories and a power increase P_{DC} can be achieved.

With mains chokes, a power increase P_{DC} is achieved (through reduction of the harmonic content). For adherence to EMC categories, additional further measures are necessary.

General electrical data

	Power loss P_V [W]	
Type	Total (when operating with I_{aN})	Constant (control electronics only)
E94APNE0104	55	5
E94APNE0364	110	5
E94APNE1004	230	7
E94APNE2454	550	7

5.3 Rated data

5.3.1 Overview

Input data

	Voltage	Frequency	Rated current [A]		Number of phases
	[V]	[Hz]	up to +45 °C ①	up to +55 °C ①	
E94APNE0104	230/400/480	50/60	8/8/8	6/6/6	3
E94APNE0364	230/400/480	50/60	29/29/29	21.8/21.8/21.8	3
E94APNE1004	230/400/480	50/60	82/82/82	61/61/61	3
E94APNE2454	230/400/480	50/60	200/200/200	150/150/150	3

① Temperature in the control cabinet

Output data

	Voltage	Current [A]		Number of phases
Type	[V]	up to +45 °C ①	up to +55 °C ①	
E94APNE0104	325/565/675	10/10/10	7.5/7.5/7.5	-
E94APNE0364	325/565/675	36/36/36	27/27/27	-
E94APNE1004	325/565/675	100/100/100	75/75/75	-
E94APNE2454	325/565/675	245/245/245	184/184/184	-

① Temperature in the control cabinet

5.3.2 Operation at rated mains voltage 230 V

Input data

Mains	Voltage	Voltage range	Frequency range
	U_{Lrated} [V]	U_{Lrated} [V]	f [Hz]
3/PE AC	230	180 - 0 % ... 264 + 0 %	45 - 0 % ... 65 + 0 %

Type	Voltage [V]	Continuous input power S_L [kVA]
E94APNE0104	230	3.2
E94APNE0364	230	11.5
E94APNE1004	230	32.6
E94APNE2454	230	79.6

Output data

Mains	Voltage	Voltage range	Frequency range
	U_{DC} [V]	U_{DC} [V]	f [Hz]
2/PE DC	325	260 - 0 % ... 370 + 0 %	-

Type	Output current and output power					
	100 %		5-s cycle		3-min cycle	
	I_{DC} [A]	P_{DC} [kW]	I_{DC} [A]	P_{DC} [kW]	I_{DC} [A]	P_{DC} [kW]
E94APNE0104	10	2.1	40	8.4	15	3.2
E94APNE0104 + E94AZMP0084	10	2.8	40	11.2	15	4.2
E94APNE0364	36	7.5	108	22.5	54	11.3
E94APNE0364 + E94AZMP0294	36	10.1	108	30.3	54	15.5
E94APNE1004	100	20.8	200	41.6	150	31.2
E94APNE1004 + E94AZMP0824	100	27.9	200	55.8	150	41.9
E94APNE2454	245	51	368	76.5	368	76.5
E94APNE2454 + E94AZMP2004	245	68.5	368	103	368	103

100 %	Permanent rated values
5-s cycle	Cycle for the second-range (0.5 s overload/4.5 s recovery time with 75 % of the permanent rated value)
3-min cycle	Cycle for the minute-range (60 s overload/120 s recovery time with 75 % of the permanent rated value)

Rated data for internal brake chopper

Type	R_{Bmin} [Ω]	I_{BRmax} [A]	P_{BRmax} [kW]	I_{BRd} [A]	P_{Bd} [kW]	t_Z [s]	t_{on} [s]	t_{fp} [s]
E94APNE0104	18.0	21.7	8.5	7.9	1.1	4.3	0.5	0.5
E94APNE0364	6.0	65.0	25.4	29.1	5.1	3.0	0.5	0.5
E94APNE1004	2.5	156	60.8	62.7	9.8	3.6	0.5	0.5
E94APNE2454	1.4	279	109	112	17.5	3.6	0.5	0.5

R_{Bmin}	Minimum brake resistance, nominal value ±10 %
I_{BRmax}	Peak current
P_{BRmax}	Peak braking power
I_{BRd}	Continuous current RMS - important for the dimensioning of the cables
P_{Bd}	Continuous braking power
t_Z	Cycle time, periodic load change with running time and recovery time
t_{on}	Running time
$t_Z - t_{on}$	Recovery time
t_{fp}	Maximum running time without initial load and compliance with the recovery time

Note on the brake chopper data

Due to thermal load, the resistance value changes and therefore the dependent rated data as well.

The brake chopper can output the peak braking power maximally for the specified time t_{on} within a cycle time t_Z.

The brake chopper can output the peak braking power from unloaded states once for the time t_{fp}, e. g. after mains connection or after a recovery time of > 5 x t_Z.

If the times are exceeded, the brake chopper is clocked so that only the continuous braking power is output. This serves to the protection of the brake chopper, however, it does not protect the brake resistor. The brake resistor connected can be protected separately by a thermal contact.

5.3.3 Operation at rated mains voltage 400 V

Input data

Mains	Voltage	Voltage range	Frequency range
	U_{Lrated} [V]	U_{Lrated} [V]	f [Hz]
3/PE AC	400	320 - 0 % ... 440 + 0 %	45 - 0 % ... 65 + 0 %

Type	Voltage [V]	Continuous input power S_L [kVA]
E94APNE0104	400	5.5
E94APNE0364	400	20.1
E94APNE1004	400	56.7
E94APNE2454	400	138

Output data

Mains	Voltage	Voltage range	Frequency range
	U_{DC} [V]	U_{DC} [V]	f [Hz]
2/PE DC	565	455 - 0 % ... 620 + 0 %	-

Type	Output current and output power					
	100 %		5-s cycle		3-min cycle	
	I_{DC} [A]	P_{DC} [kW]	I_{DC} [A]	P_{DC} [kW]	I_{DC} [A]	P_{DC} [kW]
E94APNE0104	10	3.6	40	14.4	15	5.4
E94APNE0104 + E94AZMP0084	10	4.9	40	19.6	15	7.4
E94APNE0364	36	13.0	108	39.0	54	19.5
E94APNE0364 + E94AZMP0294	36	17.5	108	52.5	54	26.3
E94APNE1004	100	36.2	200	72.4	150	54.3
E94APNE1004 + E94AZMP0824	100	48.6	200	97.2	150	72.9
E94APNE2454	245	88.6	368	133	368	133
E94APNE2454 + E94AZMP2004	245	119	368	179	368	179

100 %	Permanent rated values
5-s cycle	Cycle for the second-range (0.5 s overload/4.5 s recovery time with 75 % of the permanent rated value)
3-min cycle	Cycle for the minute-range (60 s overload/120 s recovery time with 75 % of the permanent rated value)

Rated data for internal brake chopper

Type	R_{Bmin} [Ω]	I_{BRmax} [A]	P_{BRmax} [kW]	I_{BRd} [A]	P_{Bd} [kW]	t_Z [s]	t_{on} [s]	t_{fp} [s]
E94APNE0104	27.0	26.9	19.5	9.7	2.6	4.3	0.5	0.5
E94APNE0364	12.0	60.4	43.8	27.0	8.7	3.0	0.5	0.5
E94APNE1004	5.0	145	105	58.2	17.0	3.6	0.5	0.5
E94APNE2454	2.8	259	188	104	30.3	3.6	0.5	0.5

R_{Bmin}	Minimum brake resistance, nominal value ±10 %
I_{BRmax}	Peak current
P_{BRmax}	Peak braking power
I_{BRd}	Continuous current RMS - important for the dimensioning of the cables
P_{Bd}	Continuous braking power
t_Z	Cycle time, periodic load change with running time and recovery time
t_{on}	Running time
$t_Z - t_{on}$	Recovery time
t_{fp}	Maximum running time without initial load and compliance with the recovery time

Note on the brake chopper data

Due to thermal load, the resistance value changes and therefore the dependent rated data as well.

The brake chopper can output the peak braking power maximally for the specified time t_{on} within a cycle time t_Z.

The brake chopper can output the peak braking power from unloaded states once for the time t_{fp}, e. g. after mains connection or after a recovery time of > 5 x t_Z.

If the times are exceeded, the brake chopper is clocked so that only the continuous braking power is output. This serves to the protection of the brake chopper, however, it does not protect the brake resistor. The brake resistor connected can be protected separately by a thermal contact.

5.3.4 Operation with rated mains voltage 480 V

Input data

Mains	Voltage	Voltage range	Frequency range
	U_{Lrated} [V]	U_{Lrated} [V]	f [Hz]
3/PE AC	480	340 - 0 % ... 528 + 0 %	45 - 0 % ... 65 + 0 %

Type	Voltage [V]	Continuous input power S_L [kVA]
E94APNE0104	480	6.6
E94APNE0364	480	24.1
E94APNE1004	480	68.1
E94APNE2454	480	166

Output data

Mains	Voltage	Voltage range	Frequency range
	U_{DC} [V]	U_{DC} [V]	f [Hz]
2/PE DC	675	480 - 0 % ... 746 + 0 %	-

Type	Output current and output power					
	100 %		5-s cycle		3-min cycle	
	I_{DC} [A]	P_{DC} [kW]	I_{DC} [A]	P_{DC} [kW]	I_{DC} [A]	P_{DC} [kW]
E94APNE0104	10	4.3	40	17.2	15	6.5
E94APNE0104 + E94AZMP0084	10	5.8	40	23.3	15	8.7
E94APNE0364	36	15.6	108	48.8	54	23.4
E94APNE0364 + E94AZMP0294	36	21.0	108	63.0	54	31.5
E94APNE1004	100	43.4	200	86.8	150	65.1
E94APNE100 + E94AZMP0824	100	58.3	200	117	150	87.5
E94APNE2454	245	106	368	159	368	159
E94APNE2454 + E94AZMP2004	245	143	368	215	368	215

100 %	Permanent rated values
5-s cycle	Cycle for the second-range (0.5 s overload/4.5 s recovery time with 75 % of the permanent rated value)
3-min cycle	Cycle for the minute-range (60 s overload/120 s recovery time with 75 % of the permanent rated value)

Rated data for internal brake chopper

Type	R_{Bmin} [Ω]	I_{BRmax} [A]	P_{BRmax} [kW]	I_{BRd} [A]	P_{Bd} [kW]	t_Z [s]	t_{on} [s]	t_{fp} [s]
E94APNE0104	27.0	28.3	21.7	10.3	2.8	4.3	0.5	0.5
E94APNE0364	12.0	63.8	48.8	28.5	9.7	3.0	0.5	0.5
E94APNE1004	5.0	153	117	61.4	18.9	3.6	0.5	0.5
E94APNE2454	2.8	273	209	110	33.7	3.6	0.5	0.5

R_{Bmin}	Minimum brake resistance, nominal value ±10 %
I_{BRmax}	Peak current
P_{BRmax}	Peak braking power
I_{BRd}	Continuous current RMS - important for the dimensioning of the cables
P_{Bd}	Continuous braking power
t_Z	Cycle time, periodic load change with running time and recovery time
t_{on}	Running time
$t_Z - t_{on}$	Recovery time
t_{fp}	Maximum running time without initial load and compliance with the recovery time

Note on the brake chopper data

Due to thermal load, the resistance value changes and therefore the dependent rated data as well.

The brake chopper can output the peak braking power maximally for the specified time t_{on} within a cycle time t_Z.

The brake chopper can output the peak braking power from unloaded states once for the time t_{fp}, e. g. after mains connection or after a recovery time of > 5 x t_Z.

If the times are exceeded, the brake chopper is clocked so that only the continuous braking power is output. This serves to the protection of the brake chopper, however, it does not protect the brake resistor. The brake resistor connected can be protected separately by a thermal contact.

5.3.5 Fuses and cable cross-sections

Mains	Voltage	Voltage range	Frequency range
	U_{Lrated} [V]	U_{Lrated} [V]	f [Hz]
3/PE AC	230 ... 480	180 - 0 % ... 528 + 0 %	45 ... 65

Installation in accordance with EN 60204-1

The data are recommendations. Other dimensioning/laying systems are possible (e.g. according VDE 0298-4).

The cable cross-sections apply under the following conditions:

- Use of PVC-insulated copper cables
- Conductor temperature < 70 °C, ambient temperature < 45°C
- No bundling of cables or cores
- Three loaded cores

Type	①	②	L1, L2, L3 - laying system			FI [1]
			B2	C	F	
	[A]	[A]	[mm²]	[mm²]	[mm²]	[mA]
E94APNE0104	C16	-	2.5	2.5	-	≥ 300
E94APNE0364	C40	-	10.0	10.0	-	≥ 300
E94APNE1004	-	125	-	50	50	≥ 300
E94APNE2454	-	315	-	-	150 (2 x 70)	≥ 300

① Circuit breaker
② Fuse of the utilisation category gG/gL or semiconductor fuses or the utilisation category gRL
1) Universal-current-sensitive earth-leakage circuit breaker, RCD type B
If several devices or cable lengths > 50 m are used, it is possible that the circuit breaker will respond, depending on the type of cable and the switching frequency.
2) Device with integrated mains choke
Observe national and regional regulations!

Installation to UL

Only use UL-approved cables, fuses and fuse holders.

UL fuse: Voltage 600 V; CC, J or T class fuses

Type	standard installation		motor group installation		FI [1]
	① valeur nominale (max.)	L1, L2, L3	① valeur nominale (max.)	L1, L2, L3	
	[A]	[AWG]	[A]	[AWG]	[mA]
E94APNE0104	15	14	15	14	≥ 300
E94APNE0364	60	6	60	6	≥ 300
E94APNE1004	125	1	125	1	≥ 300
E94APNE2454	300	300 mcm 2 x 1/0	300	300 mcm 2 x 1/0	≥ 300

① Fuse

1) Universal-current-sensitive earth-leakage circuit breaker, RCD type B
If several devices or cable lengths > 50 m are used, it is possible that the circuit breaker will respond, depending on the type of cable and the switching frequency.

2) Device with integrated mains choke

3) The directive for a "group installation" according to UL508A or NEC, CEC must be considered.

Observe national and regional regulations!

5.3.6 Mains filters for power supply modules

When using the mains filters assigned, conditions must be observed for compliance with EMC class C2:

- The measures for the use on IT systems must be applied to all axis modules in the interconnection (separation of internal filter components from PE, (📖 357)).
- The maximum sum total of all motor cable lengths ($\Sigma\ l_{mot}$) for the filter used must be observed.

Motor cable lengths in the interconnection

The assigned filters are designed for $\Sigma\ l_{mot}$
(E94AZRPxxx4: 60 m (= 6 x 10 m), E94AZMPxxx4: 500 m (= 10 x 50 m)).

For a different number of axis modules, $\Sigma\ l_{mot}$ can be determined from the following diagrams.

Maximum total of motor cable lengths [m] for the achievement of EMC Category C2

Number of axes	Power supply module with	
	RFI filter E94AZRPxxx4 (short distance)	**Mains filter E94AZMPxxx4** (long distance)
1	67.5	100
2	67.5	200
3	67.5	300
4	65	400
5	62.5	500
6	60	600
7	57.5	575
8	55	550
9	52.5	525
10	50	500
11	47.5	475
12	45	450
13	42.5	425
14	40	400
15	37.5	375
16	35	350
17	32.5	325
18	30	300
19	27.5	275
20	25	250

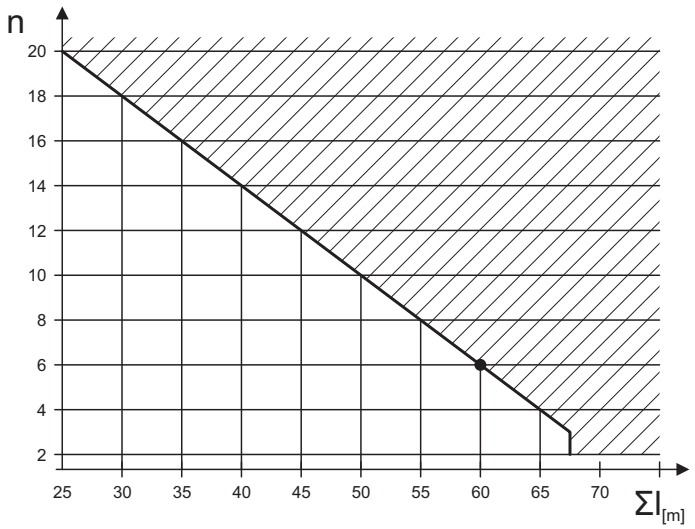

Fig. 5-1 Filter E94AZMP...SDB (short distance): total motor lengths according to number of axis modules

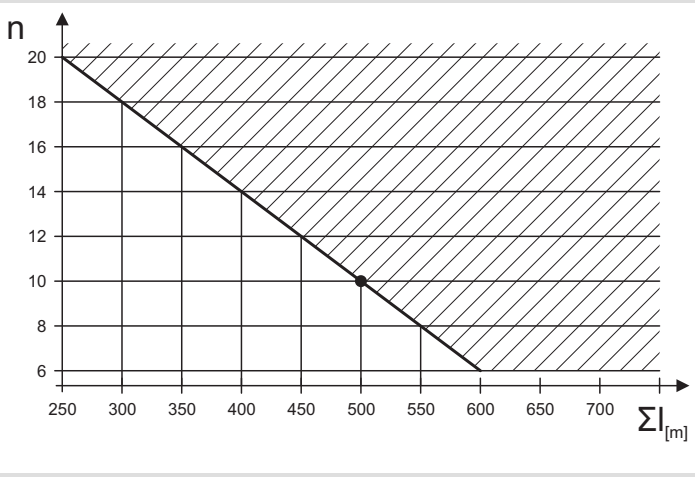

Fig. 5-2 Filter E94AZMP...LDB (long distance): total motor lengths according to axis modules

With different motor cable lengths, per axis at least 25 % of the longest cable must be considered when calculating the total motor cable length.

Example: 1	Motor cable length l_{mot} [m]		
Axis	**Actual value**	**min. 25 % of the longest cable**	**To be considered**
1	6	0.25 * 20 = 5	6
2 ... 4	3 * 10		3 * 10
5	20	⇦	20
Total	56	max. permissible for 5 axes: ∑< 60	**56**
		EMC class C2 will be complied with.	☑

Example 2	Motor cable length l_{mot} [m]		
Axis	**Actual value**	**min. 25 % of the longest cable**	**To be considered**
1 ... 4	4 * 5	0.25 * 40 = 10	4 * 10
5	40	⇦	40
Total	60	max. permissible for 5 axes: ∑< 60	**80**
		EMC class C2 will not be complied with.	☒

Constellations with unfavourable or intensifying parasitic couplings

Compliance with EMC category C2 may also be interfered with by other circumstances:

- Distribution of the axis modules over several control cabinets without efficient HF equipotential bonding between the mounting plates
- No use of Lenze system cables or cables with the same specifications
- Poor connection of motor cable shields
- Motor cable interruptions
- Other interference sources (e.g. switched-mode power supplies)
- Isochronous switching of the inverter output stages

5.4 Device description

This page remains blank to give you a clearly arranged overview of the following subject on the next double page.

5.4.1 Devices in the range 10 ... 36 A (4 ... 18 kW)

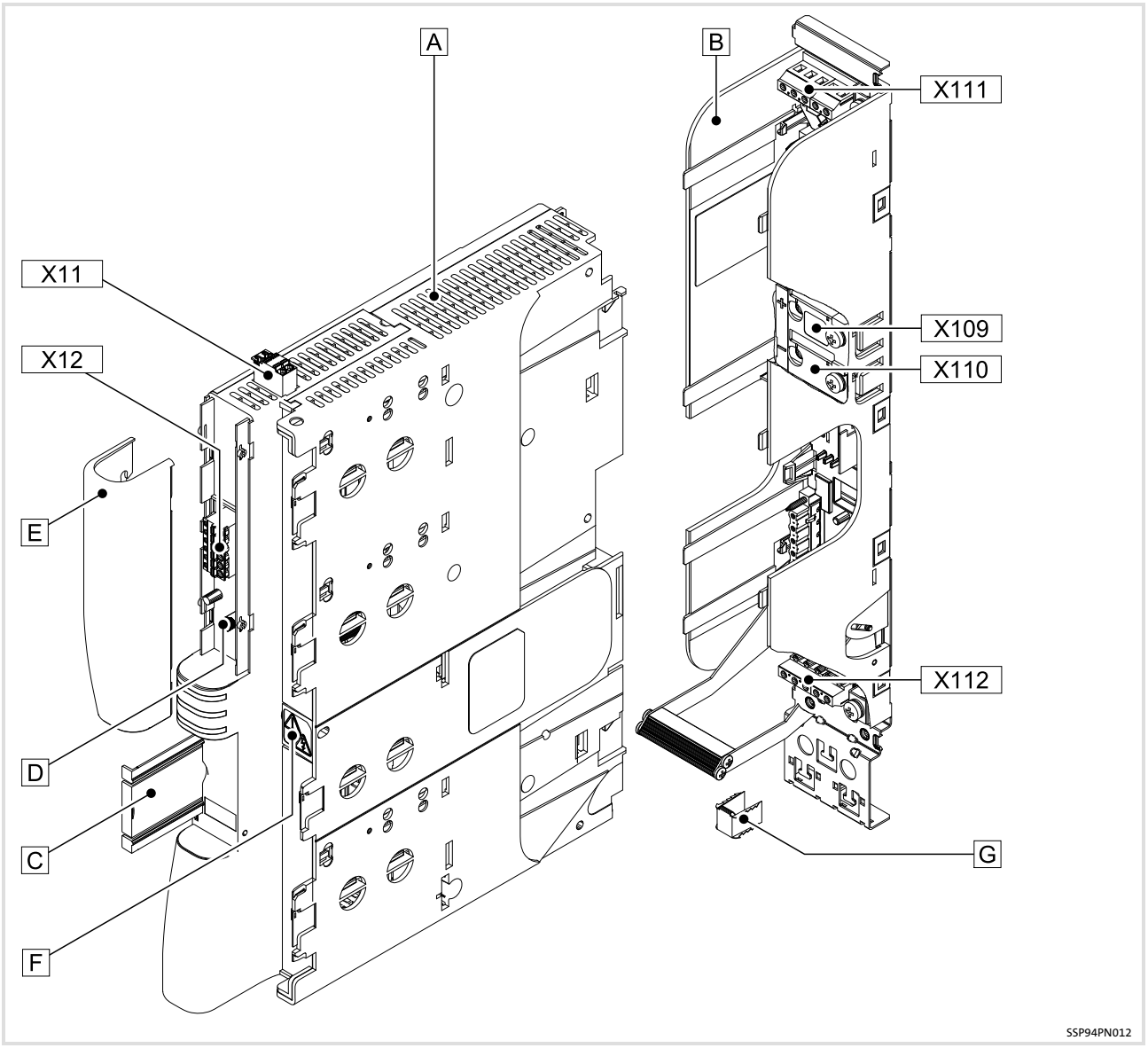

Standard device A	
Pos.	**Description**
X11	24 V supply
X12	4 digital outputs
	1 digital input
C	Nameplate, retractable
D	Setting of mains voltage/brake chopper threshold
E	Upper cap

The LED display enables fast indication of several operating states.

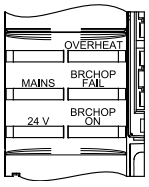

SSP94LED21

LED	labelling	Colour	Description
	-	-	-
	OVERHEAT	red	Overtemperature
	MAINS	green	without function
	BRCHOP FAIL	red	Short circuit in brake chopper
	24 V	green	24 V supply voltage o.k.
	BRCHOP ON	yellow	Brake chopper active

Pos.	Symbol	Description
F		**Long discharge time**: All power terminals carry hazardous electrical voltages for a longer period of time after mains disconnection! Depending on the device, this period of time may be up to 30 minutes.
		High discharge current: Carry out fixed installation and PE connection according to EN 61800-5-1!
		Electrostatic sensitive devices: Before working on the device, the personnel must be free of electrostatic charge!

Installation backplane B		
Pos.	**Description**	
X111	Mains (supply from above, e.g. from top filters)	
	DC-bus voltage (compatible with 9300 series)	
X112	Mains (supply from below, e.g. from built-on filter)	
	External brake resistor	
X109	DC-bus busbar +	Direct connection of 9400 axis modules, device sizes 1 ... 3
X110	DC busbar -	
G	EMC shield clamp	

5.4.2 Devices in the range 100 ... 245 A (48 ... 119 kW)

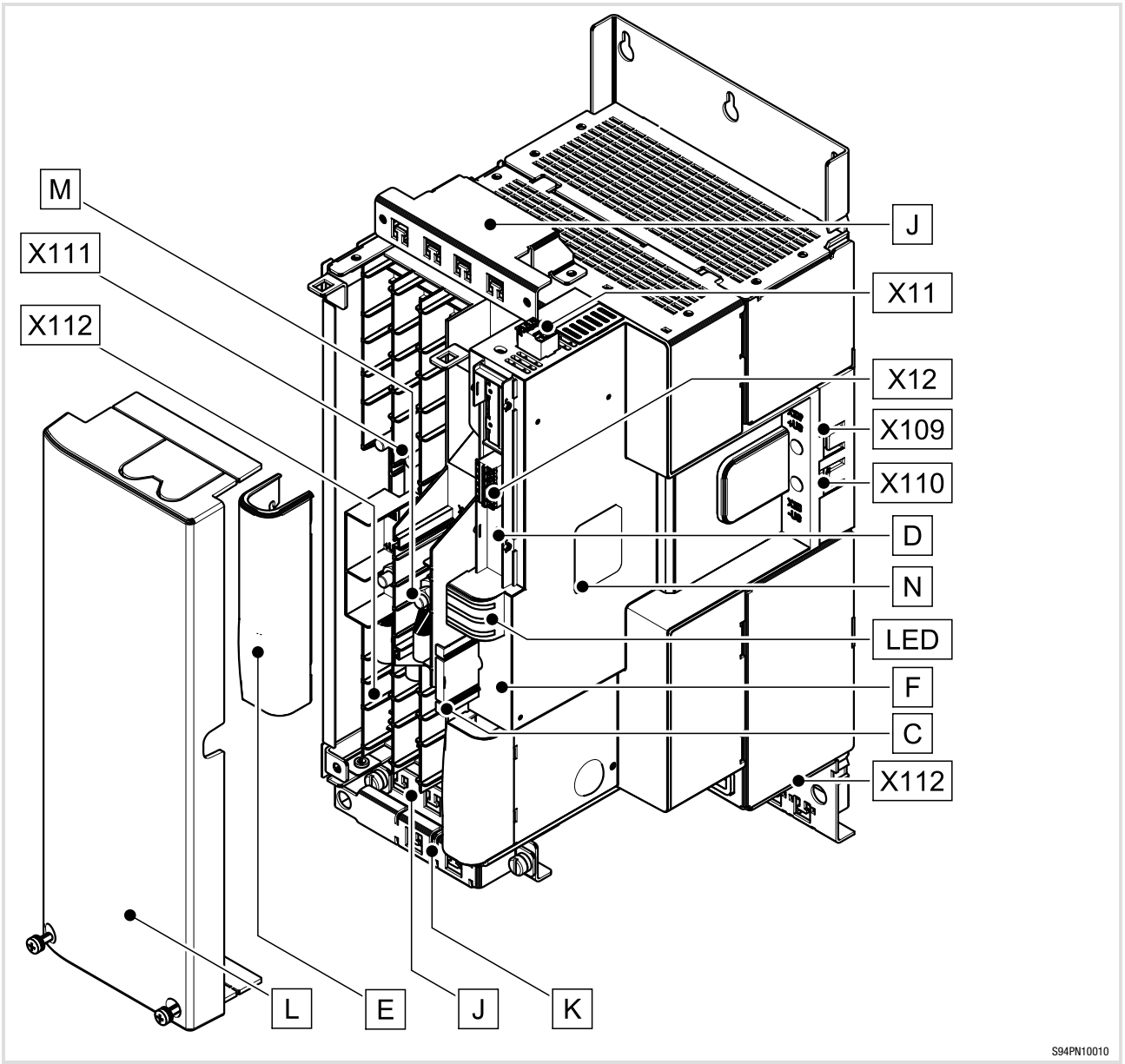

Pos.	Description
X11	External 24 V supply
X12	4 digital outputs
	1 digital input
C	Nameplate, retractable
D	Setting of mains voltage/brake chopper threshold
E	Upper cap
J	Cable fixation for L1 ... L3, ⏚, also serves as a lifting aid, at the top and bottom, can be removed
K	Cable fixation for +UG/-UG, can be mounted at the top and bottom
L	Module front with removable cable opening covers
M	Cable connection +UG/-UG (also specified as part of X111 or X112)
N	Nameplate 2

Pos.	Description (connections)	
X111	Mains (supply from above, e.g. through top-mounted filter)	For cables being routed upwards
	DC-bus voltage (compatible to 9300 series)	
X112	Mains (supply from below, e.g. through side-mounted filter)	For cables being routed downwards
	External brake resistor	
	DC bus	
X109	DC busbar +	Direct connection of 9400 series axis modules, device size 1 ... 3
X110	DC busbar -	

The LED display enables fast indication of several operating states.

LED	labelling	Colour	Description
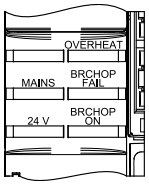 SSP94LED21	-	-	-
	OVERHEAT	red	Overtemperature
	MAINS	green	without function
	BRCHOP FAIL	red	Short circuit in brake chopper
	24 V	green	24 V supply voltage o.k.
	BRCHOP ON	yellow	Brake chopper active

Pos.	Symbol	Description
F		**Long discharge time**: All power terminals carry hazardous electrical voltages for a longer period of time after mains disconnection! Depending on the device, this period of time may be up to 30 minutes.
		**High discharge current**: Carry out fixed installation and PE connection according to EN 61800-5-1!
		**Electrostatic sensitive devices**: Before working on the device, the personnel must be free of electrostatic charge!

5.5 Mechanical installation

5.5.1 Important notes

Note!

The devices must be installed in housings (e.g. control cabinets) to meet applicable regulations.

- The mounting location must always comply with the operating conditions specified in the technical data (📖 242). Take additional measures if necessary.
- The mounting plate of the control cabinet must have the following properties:
  – electrically conductive
  – free of lacquer
- The mechanical connections must always be ensured.
- A free air circulation must be ensured for dissipating the heat.
- The described EMC properties are provided if the following conditions are complied with:
  – The devices are mounted according to the arrangement concept described.
  – The prepared cables are used and remain unchanged.

5.5.2 Devices in the range 10 ... 36 A (4 ... 18 kW)

Mounting grid

We recommend to provide the mounting plate with a grid pattern of M5 threaded holes for attaching the devices. This preparation enables easy attachment of the devices, and the device sizes 1, 2, ... n can thus be mounted directly adjacent to each other.

Note!

- ► Permissible are M5 screw and washer assemblies or hexagon socket screws with washer.
- ► Tightening torque: 3.0 Nm / 26 lb-in.
- ► The screw joint in the installation backplane may jut out no more than 7 mm.

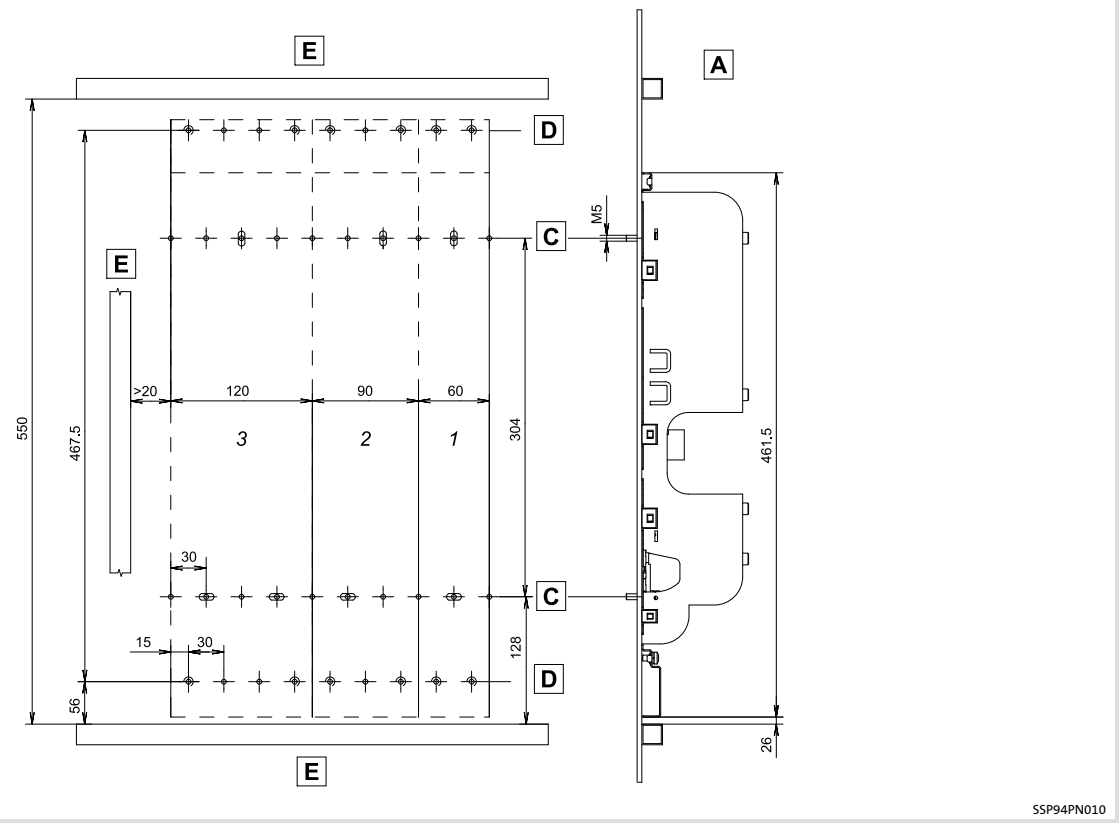

A Mounting with backplane for attaching the power supply module
C Grid hole pattern for installation backplane
D Grid hole pattern for other device sizes or built-on/footprint filters (only Single Drive)
E Cable duct
1 ... 3 Device size, mounting holes used

Standard device with installation backplane

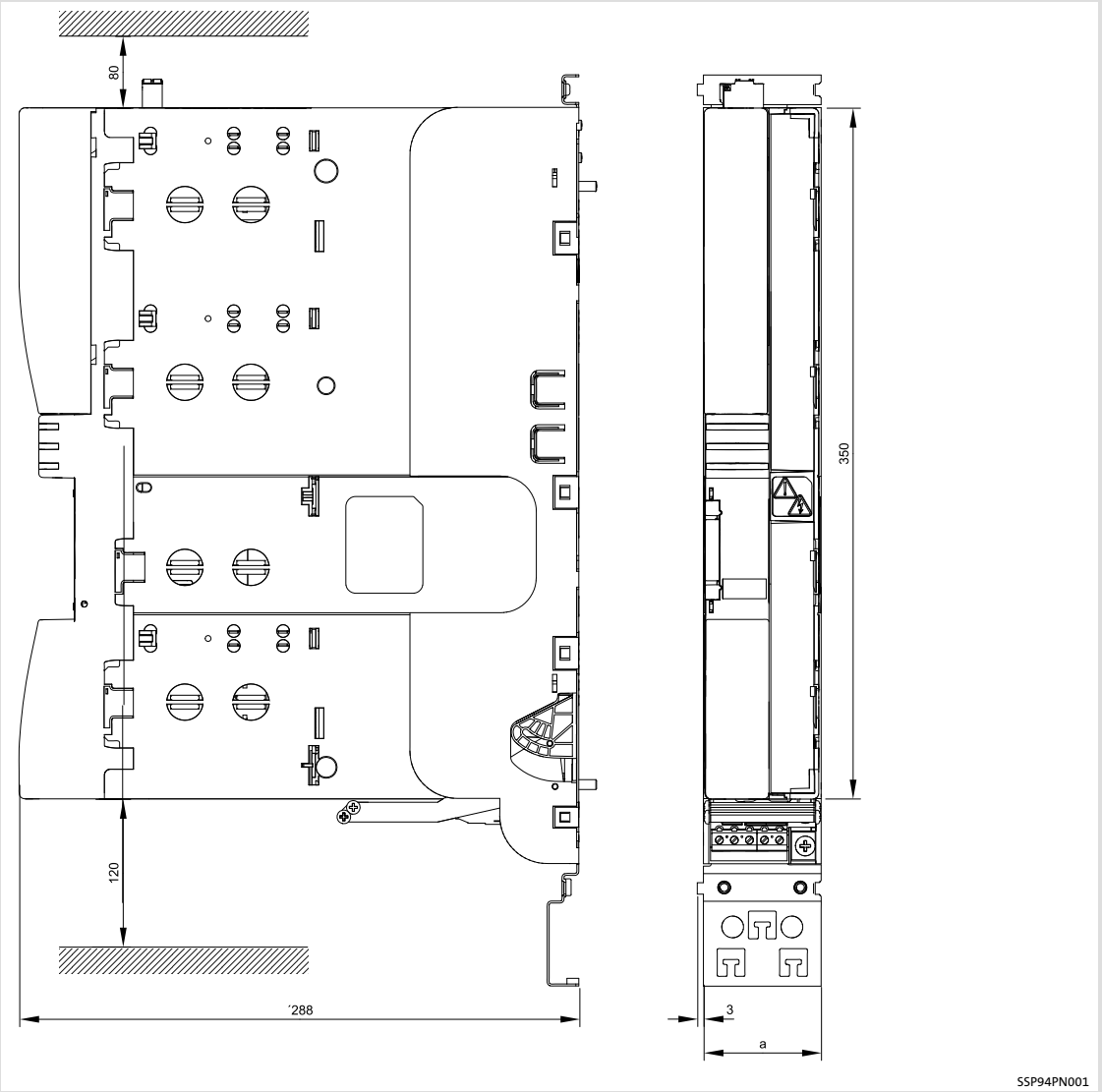

Type		Dimensions a	Weight
Power supply module	**Installation backplane**	[mm]	[kg]
E94APNE0104	E94AZPP0104	60	2.6
E94APNE0364	E94AZPP0364	120	5.3

Arrangement of the devices

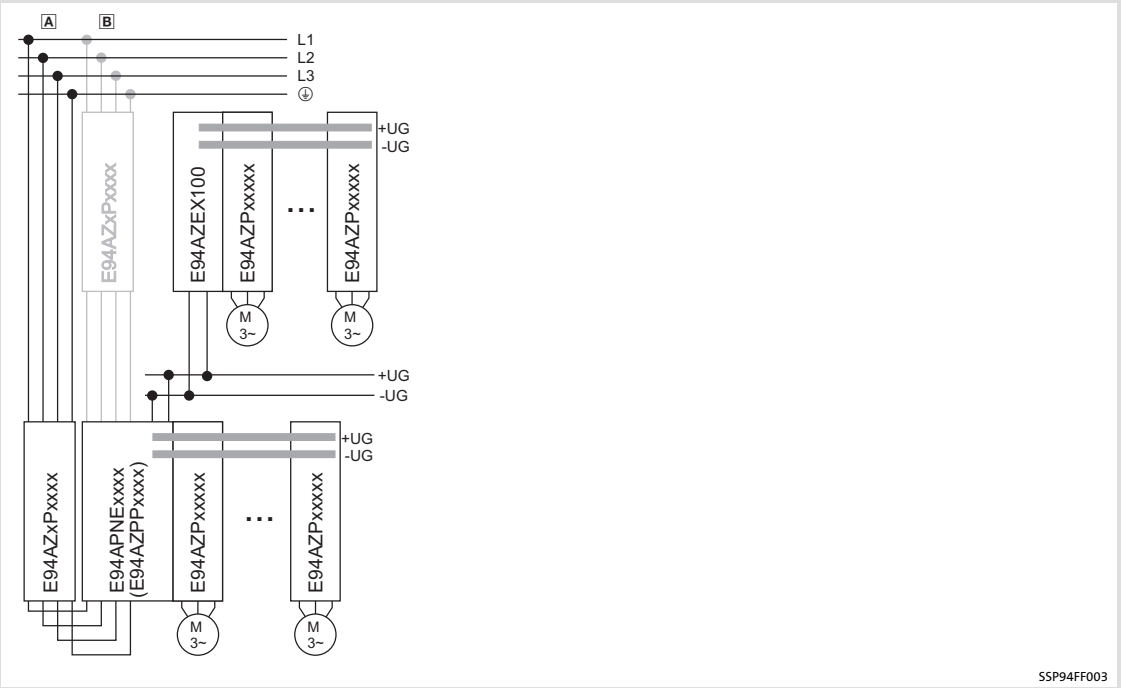

Fig. 5-3 Arrangement concept

A	Standard mounting: side mounting
B	Mounting variant: top mounting
E94AZxPxxxx	Filter
E94APNExxxx	9400 DC power supply module
	(up to 36 A/18 kW with E94AZPPxxxx installation backplane)
E94AZEX100	DC input module
E94AZPxxxxx	Installation backplane for 9400 axis module

A DC-bus connection has to be planned and dimensioned taking the technical data into account.

How to arrange the devices via the DC busbars for operation in the DC-bus connection:

- ► Arrange the devices in a row from left to right.
- ► Install the supplying device on the left:
  - – DC power supply module (in a first row),
  - – DC input module (in the following rows).
- ► Install the multi drive axis controllers to the right from the highest to the lowest power (recommendation).
- ► For increasing the braking power also single drive axis controllers can be integrated. For this purpose these axis controllers have to be equipped with the optional busbar mounting set (E94AZJAxxx).

Note!

If the first axis module is not connected to the DC busbar, the cable between power supply module and axis module must not be longer than 5 m.

Installation steps

Proceed as follows for installation:

1. Prepare mounting plate with M5 threaded holes according to the mounting grid.
   – Start on the left with the installation backplane of the DC power supply module E94AZPNxxxx.
   – Install the axis modules from the left to the right with decreasing rated power.
2. Screw the installation backplane onto the mounting plate. Do not tighten the screws yet.
   – Use M5 screw and washer assemblies or M5 hexagon socket screws with washer.
   – The screw joint in the installation backplane may jut out no more than 7 mm.
3. Align all components.
4. When busbars are used: Connect busbars.
5. Tightly screw the components onto the mounting plate.
   – Tightening torque: 3.0 Nm (26 lb-in).

5.5.3 Devices in the range 100 ... 245 A (48 ... 119 kW)

Mounting grid

We recommend to provide the mounting plate with a grid pattern of M5 threaded holes for attaching the devices. This preparation enables easy attachment of the devices, and the device sizes 1, 2, ... n can thus be mounted directly adjacent to each other.

Note!

- ► Permissible are M5 screw and washer assemblies or hexagon socket screws with washer.
- ► Tightening torque: 3.0 Nm / 26 lb-in.
- ► The screw joint in the installation backplane may jut out no more than 7 mm.

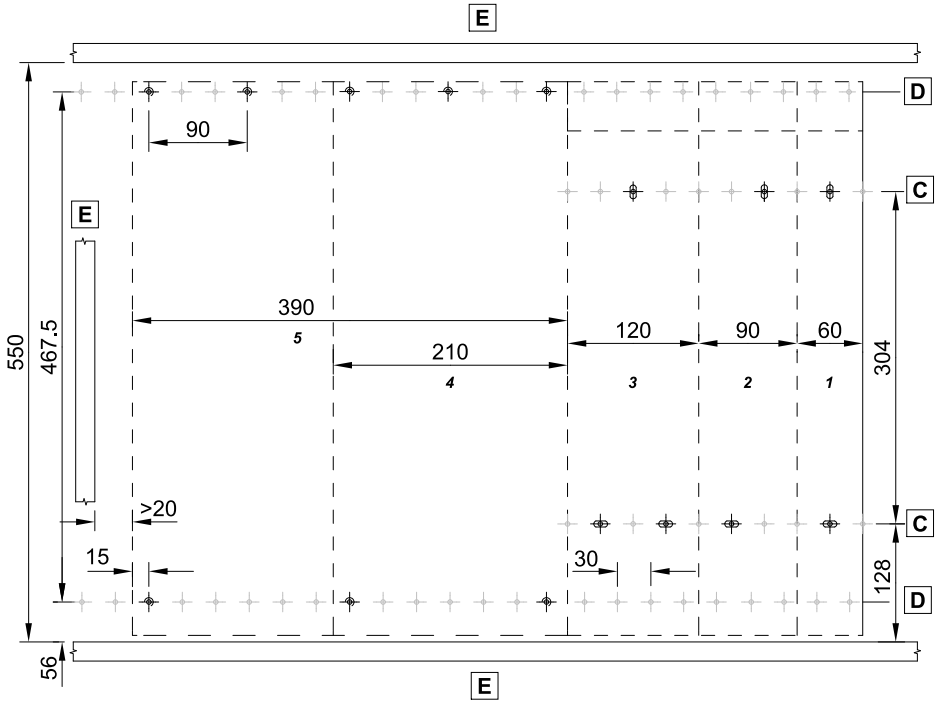

C Grid hole pattern for installation backplane
D Grid hole pattern for other device sizes or filters mounted below or beside the device (only for Single Drive)
E Cable duct
1 ... *5* Device size, mounting holes used

Dimensions

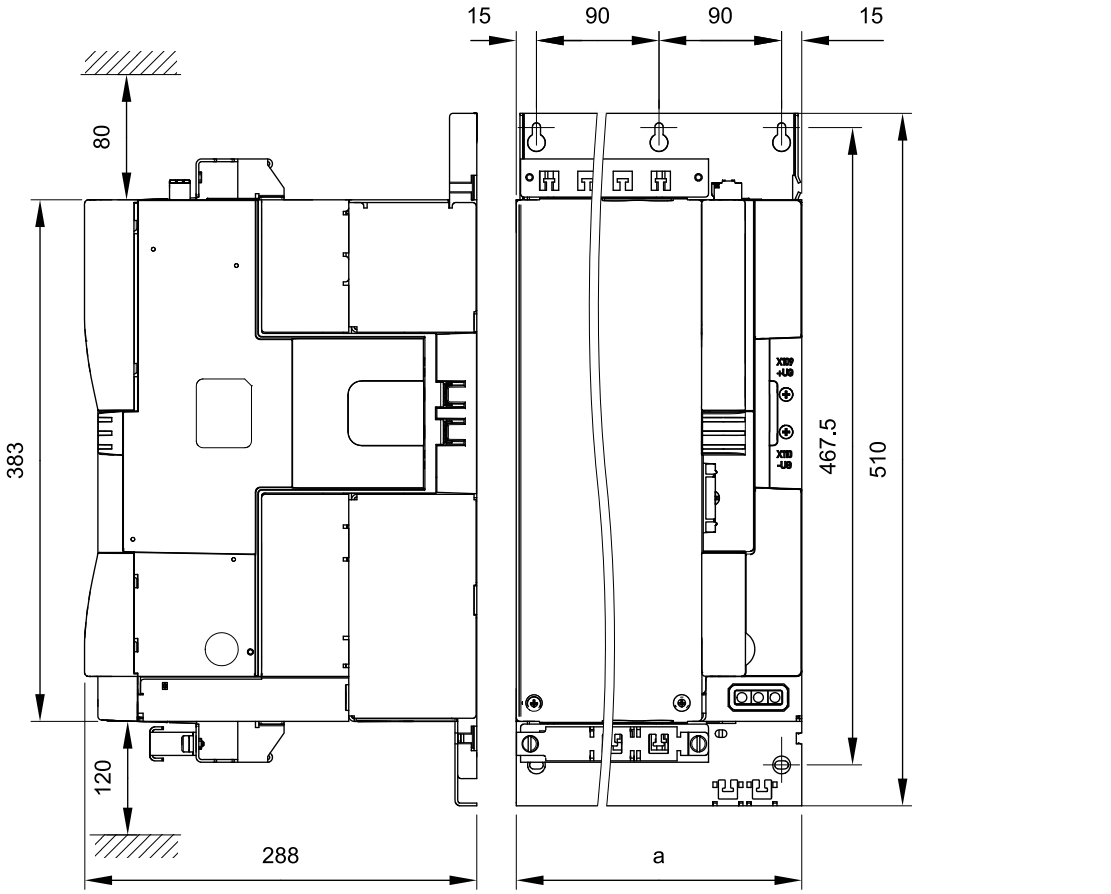

Type Power supply module	Dimension a [mm]	Mass [kg]	Device size
E94APNE1004	210	13.5	4
E94APNE2454	390	28.5	5

Arrangement of the devices

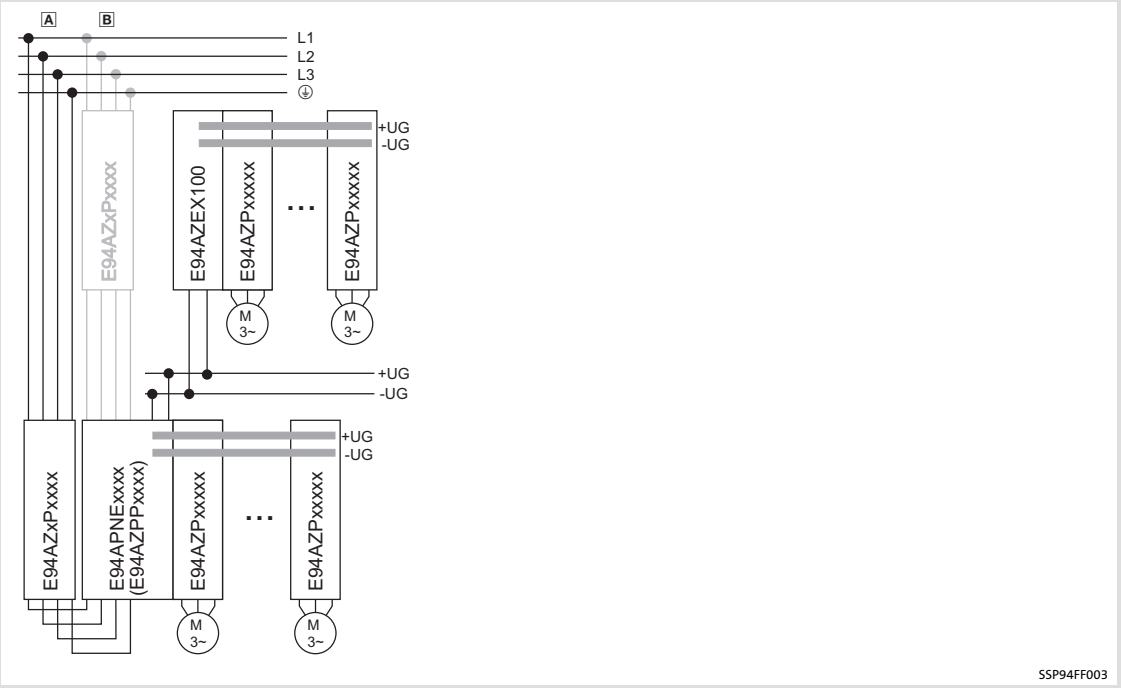

Fig. 5-4 Arrangement concept

A	Standard mounting: side mounting
B	Mounting variant: top mounting
E94AZxPxxxx	Filter
E94APNExxxx	9400 DC power supply module
	(up to 36 A/18 kW with E94AZPPxxxx installation backplane)
E94AZEX100	DC input module
E94AZPxxxxx	Installation backplane for 9400 axis module

A DC-bus connection has to be planned and dimensioned taking the technical data into account.

How to arrange the devices via the DC busbars for operation in the DC-bus connection:

- ► Arrange the devices in a row from left to right.
- ► Install the supplying device on the left:
  - – DC power supply module (in a first row),
  - – DC input module (in the following rows).
- ► Install the multi drive axis controllers to the right from the highest to the lowest power (recommendation).
- ► For increasing the braking power also single drive axis controllers can be integrated. For this purpose these axis controllers have to be equipped with the optional busbar mounting set (E94AZJAxxx).

Installation steps

Proceed as follows for installation:

1. Prepare M5 threaded holes on the mounting plate according to the mounting grid.
   – Always use all specified fixing points.
2. Screw the device onto the mounting plate. Do not tighten the screws yet.
   – Use M5 screw and washer assemblies or M5 hexagon socket screws with washer.
3. Repeat step 2 with installation backplanes that can be directly installed.
4. Align all devices and installation backplanes.
5. When busbars are used: Connect the busbars now.
6. Tightly screw all devices and installation backplanes onto the mounting plate.
   – Tightening torque: 3.0 Nm (26 lb-in).

5.6 Wiring

5.6.1 Important notes



Danger!

Hazardous electrical voltage

All power connections carry a hazardous electrical voltage for a longer time after mains disconnection. Observe the information regarding the discharge time on the device.

Possible consequences:

► Death or severe injuries when touching the power terminals.

Protective measures:

► Before working on the power connections, wait at least until the discharge time has passed (depending on the device, this may be up to 30 minutes).

► Make sure that all power terminals are deenergised.



Danger!

Hazardous electrical voltage

The leakage current to earth (PE) is > 3.5 mA AC or > 10 mA DC.

Possible consequences:

► Death or severe injuries when touching the device in the event of an error.

Protective measures:

Implement the measures required in EN 61800-5-1. Especially:

► Fixed installation
  – Implement PE connection in compliance with standards.
  – Connect PE conductor twice or PE conductor cross-section ≥ 10 mm^2.

► Connection with a connector for industrial applications according to IEC 60309 (CEE):
  – PE conductor cross-section ≥ 2.5 mm^2 as part of a multi-core supply cable.
  – Provide for suitable strain relief.

Stop!

No device protection if the mains voltage is too high

The mains input is not internally fused.

Possible consequences:

► Destruction of the device if the mains voltage is too high.

Protective measures:

► Observe the maximally permissible mains voltage.

► Fuse the device correctly on the supply side against mains fluctuations and voltage peaks.

Stop!

The device contains components that can be destroyed by electrostatic discharge!

Before working on the device, the personnel must ensure that they are free of electrostatic charge by using appropriate measures.

5.6.2 Safety instructions for the installation according to UL/CSA

Note!

The fuse current given in the following is the maximum permissible value. This prevents fire and electrical hazard in the event of an error of the device.

The fuse must be smaller or equal to the maximum permissible value, taking the following into consideration:

► The maximum possible cable cross-section

► the laying system (e.g. tap installation)

► the ambient temperature

► the relevant regulations (e.g. UL508A, NEC70 and others).

Original - English

Warnings!

- Branch circuit protection:
  - Suitable for use on a circuit capable of delivering not more than 100 000 rms symmetrical amperes, 480 V max., when protected by CC, J or T class fuses.
  - Suitable for motor group installation on a circuit capable of delivering not more than 100 000 rms symmetrical amperes, 480 V max., when protected by class CC, J or T class fuses.
  - Use specified fuses as shown in the table.
  - Integral solid state short circuit protection does not provide branch circuit protection. Branch circuit protection must be provided in accordance with the National Electrical Code / Canadian Electrical Code and any additional local codes.
- The opening of the branch circuit protective device may be an indication that a fault current has been interrupted. To reduce the risk of fire or electrical shock, current-carrying parts and other components of the controller should be examined and replaced if damaged. If burnout of the current element of an overload relay occurs, the complete overload relay must be replaced.
- Max. surrounding air temperature is 45 °C.
- Max. surrounding air temperature with derating is 55 °C.
- E94APNE0104 ... E94APNE01004: Use 60/75 °C copper wire only, except for control circuits.
  E94APNE2454: Use 75 °C copper wire only, except for control circuits.
- Secondary circuit shall supplied from an external isolating source.
- These products are intended for use in a pollution degree 2 environment.
- These products are intended for use in overvoltage category III.

Type	Branch circuit/short circuit protection with fuses in accordance with UL248	
	Standard installation	Motor group installation
	Nominal value (max.) [A]	Nominal value (max.) [A]
E94APNE0104	15	15
E94APNE0364	60	60
E94APNE1004	125	125
E94APNE2454	300	300

Original - French

Avertissement !

- ► Protection par disjoncteur :
  - – Convient aux circuits non susceptibles de délivrer plus de 100 000 ampères symétriques eff., maximum 480 V, avec protection par des fusibles de calibre CC, J, ou T.
  - – Convient aux installations de groupe moteur sur des circuits non susceptibles de délivrer plus de 100 000 ampères symétriques eff., maximum 480 V, avec protection par des fusibles de calibre CC, J, ou T.
  - – Utiliser les fusibles spécifiés comme indiqué dans le tableau.
  - – La protection statique intégrée n'offre pas la même protection qu'un disjoncteur. Une protection par disjoncteur externe doit être fournie, conformément au National Electrical Code / Canadian Electrical Code, et aux autres dispositions applicables au niveau local.
- ► Le déclenchement du dispositif de protection du circuit de dérivation peut être dû à une coupure qui résulte d'un courant de défaut. Pour limiter le risque d'incendie ou de choc électrique, examiner les pièces porteuses de courant et les autres éléments du contrôleur ; les remplacer s'ils sont endommagés. Le relais de surcharge doit être remplacé en cas de grillage de l'élément traversé par le courant.
- ► Température ambiante maximale : 45 °C
- ► Température ambiante maximale avec réduction de puissance : 55 °C
- ► E94APNE0104 ... E94APNE01004 : utiliser exclusivement des conducteurs en cuivre 60/75 °C, circuits de commande exceptés.
  E94APNE2454 : utiliser exclusivement des conducteurs en cuivre 75 °C, circuits de commande exceptés.
- ► Prévoir un circuit auxiliaire alimenté par une source de tension avec isolation galvanique.
- ► Ces produits sont destinés à un environnement caractérisé par le degré de pollution 2.
- ► Ces produits sont conçus pour une utilisation dans la catégorie de surtension III.

Type	Protection du circuit de dérivation / protection contre les courts-circuits par fusibles conformément à UL248	
	Installation standard	Installation au sein d'un groupe moteur
	Valeur nominale (max.) [A]	Valeur nominale (max.) [A]
E94APNE0104	15	15
E94APNE0364	60	60
E94APNE1004	125	125
E94APNE2454	300	300

5.6.3 Design of the cables

- The cables used must comply with the approvals required for the location (e.g. UL).
- The cross-section of the PE conductor must be dimensioned according to the relevant national regulations.
- The effectiveness of a shielded cable is reached by:
  - Providing a good shield connection through large-surface shield contact.
  - Using only braided shields with low shield resistance made of tin-plated or nickel-plated copper braid.
  - Using braided shields with an overlap rate > 70 % and an overlap angle of 90 °.
  - Keeping unshielded cable ends as short as possible.

Use system cables or shielded cables for these connections:

- External brake resistor (📖 Mounting Instructions of the brake resistor)
- DC bus, cable length from 0.3 m

The following connections need not be shielded:

- Mains
- DC bus, cable length up to 0.3 m

5.6.4 Devices in the range 10 ... 36 A (4 ... 18 kW)

Example circuit

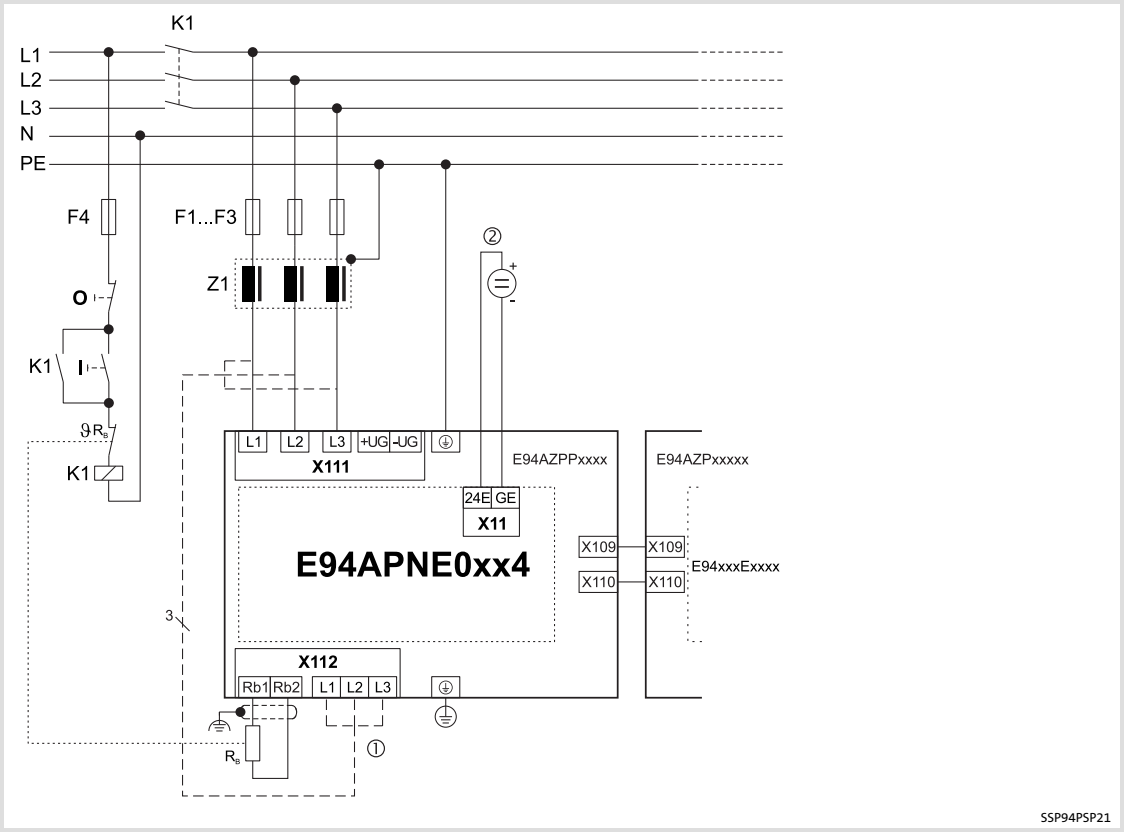

Fig. 5-5 Example circuit for installation backplane and DC power supply module

E94APNExxx4	9400 DC power supply module
E94AZPxxxxx	Installation backplane
E94xxxExxxx	9400 axis module
E94AZEX100	DC input module
F1 ... Fx	Fuses
Z1	Mains filter/RFI filter (optional)
K1	Mains contactor
RB	Brake resistor
①	Alternative: mains connection at the bottom
②	24 V supply voltage for control electronics according to IEC 61131-2

Tip!

Complete the wiring of the installation backplane before plugging in the standard device. The upper terminals of the installation backplane cannot be connected with a plugged-in standard device.

Connecting busbars

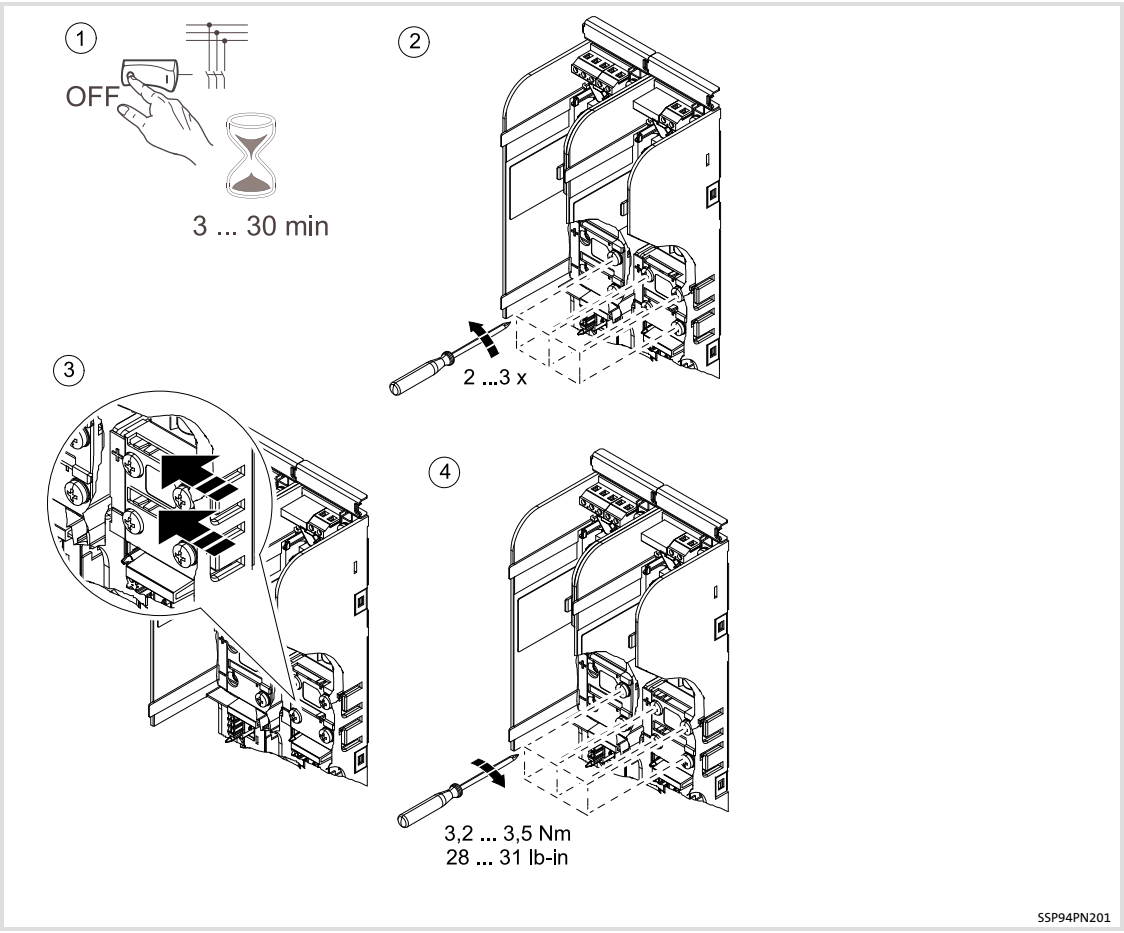

Fig. 5-6 Example: Connecting busbars

Proceed as follows to connect the busbars:

1. If devices of the interconnected system have already been in operation:
   – If necessary, switch off the supply system and wait until the discharge time has elapsed (depending on the device, this may take up to 30 minutes).
   – Make sure that all power terminals are deenergised.
2. Loosen the busbar screws (do not remove them completely).
3. Push the busbars as far as possible to the left towards the adjacent busbar.
   – Ensure that there is good contact to the adjacent busbar.
4. Tighten the busbar screws.
   – Tightening torque: 3.2 ... 3.5 Nm (28 ... 31 lb-in).
5. Screw the components onto the mounting plate, if necessary.
   – Tightening torque: 3.0 Nm (26 lb-in).

Tip!

Complete the wiring of the installation backplane before plugging in the standard device. The upper terminals of the installation backplane cannot be connected with a plugged-in standard device.

Mains

Terminal X111 (left part)	Labelling	Description
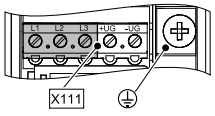 SSP940X111	L1 L2 L3	Connection of the mains phases L1, L2, L3
	⏚	Connection for the supply-side PE conductor with M5 ring cable lug

Terminal X112 (right part)	Labelling	Description
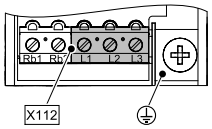 SSP940X112	L1 L2 L3	Alternative connection at the bottom: mains phases L1, L2, L3
	⏚	Connection for the supply-side PE conductor with M5 ring cable lug

Terminal data

	Max. conductor cross-section		Tightening torque		
	[mm²]	[AWG]	[Nm]	[lb-in]	
Device sizes 1 + 2: flexible with wire end ferrule	2.5	12	0.5 ... 0.6	4.5 ... 5.3	PZ0
Device size 3: flexible with/without wire end ferrule	10/16	6	1.2 ... 1.5	10.6 ... 13.3	PH1

External brake resistor

Terminal X112 (left part)	Labelling	Description
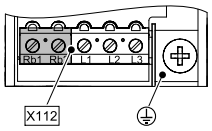 SSP940X112	Rb1 Rb2	External brake resistor

Terminal data

	Max. conductor cross-section		Tightening torque		
	[mm²]	[AWG]	[Nm]	[lb-in]	
Device sizes 1 + 2: flexible with wire end ferrule	2.5	12	0.5 ... 0.6	4.5 ... 5.3	PZ0
Device size 3: flexible with/without wire end ferrule	10/16	6	1.2 ... 1.5	10.6 ... 13.3	PH1

DC bus

Terminal X111 (right part)	Labelling	Description
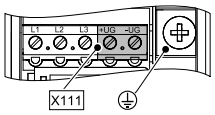 SSP940X111	+UG -UG	Alternative option for DC-bus voltage connection (compatible to 9300 series) E94ARNE0244: maximum current I_{dc} = 50 A

Terminal data

	Max. conductor cross-section		Tightening torque		
	[mm²]	[AWG]	[Nm]	[lb-in]	
Device sizes 1 + 2: flexible with wire end ferrule	2.5	12	0.5 ... 0.6	4.5 ... 5.3	PZ0
Device size 3: flexible with/without wire end ferrule	10/16	6	1.2 ... 1.5	10.6 ... 13.3	PH1

5.6.5 Devices in the range 100 ... 245 A (48 ... 119 kW)

Example circuit

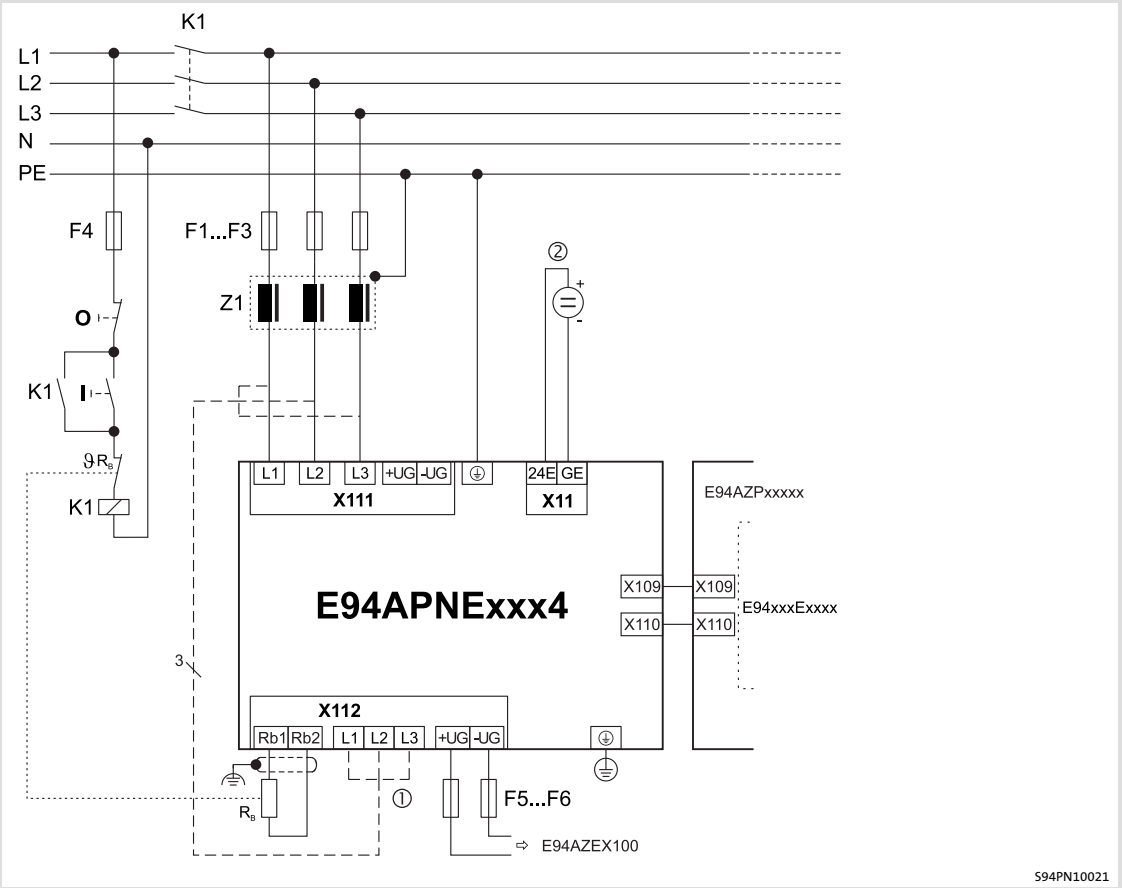

Fig. 5-7 Connection concept

E94APNExxx4	9400 DC power supply module
E94AZPxxxxx	Installation backplane
E94xxxExxxx	9400 axis module
E94AZEX100	DC input module
F1 ... Fx	Fuses
Z1	Mains filter/RFI filter (optional)
K1	Mains contactor
RB	Brake resistor
①	Alternative: mains connection at the bottom
②	24 V supply voltage for control electronics according to IEC 61131-2

Connecting busbars

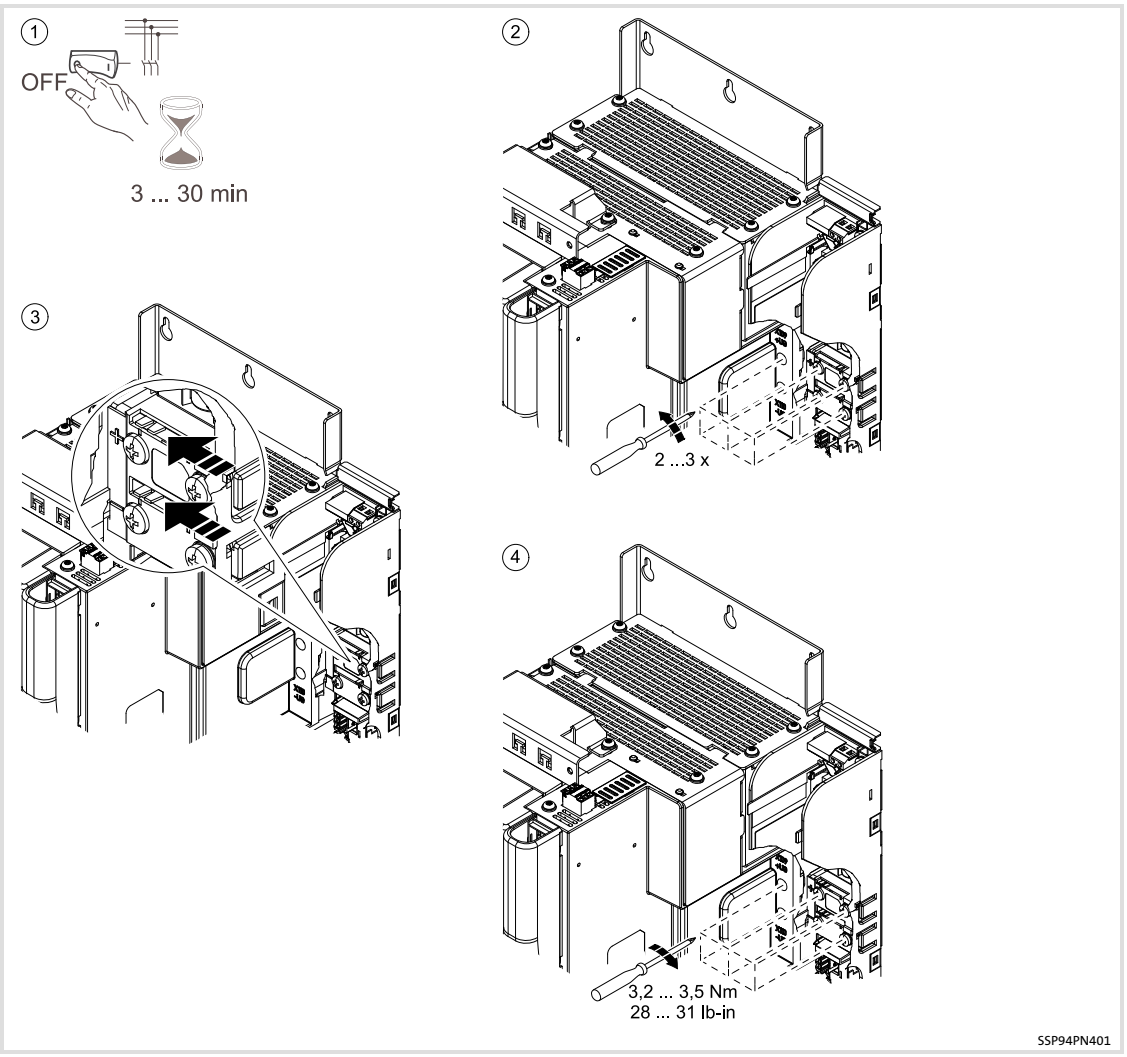

Fig. 5-8 Example: Connecting busbars

Proceed as follows to connect the busbars:

1. If devices of the interconnected system have already been in operation:
   – If necessary, switch off the supply system and wait until the discharge time has elapsed (depending on the device, this may take up to 30 minutes).
   – Make sure that all power terminals are deenergised.
2. Loosen the busbar screws (do not remove them completely).
3. Push the busbars as far as possible to the left towards the adjacent busbar.
   – Ensure that there is good contact to the adjacent busbar.
4. Tighten the busbar screws.
   – Tightening torque: 3.2 ... 3.5 Nm (28 ... 31 lb-in).
5. Screw the components onto the mounting plate, if necessary.
   – Tightening torque: 3.0 Nm (26 lb-in).

The wiring area of the power terminals is designed for the cables being routed upwards and/or downwards. Usually the AC mains cables come from above. When filters are used, the connection cables are fed from below (for filters mounted beside the module) or from above (for filters mounted above the module). The protection against contact in the cover can be removed accordingly.

To improve the cable handling, the cable cross-section can also be divided onto two cables.

The ring cable lugs used must not exceed the dimensions specified here.

- E94APNE1004 (device size 4, connection M8): max. cable lug width 20 mm
- E94APNE2454 (device size 5, connection M10): max. cable lug width 33 mm

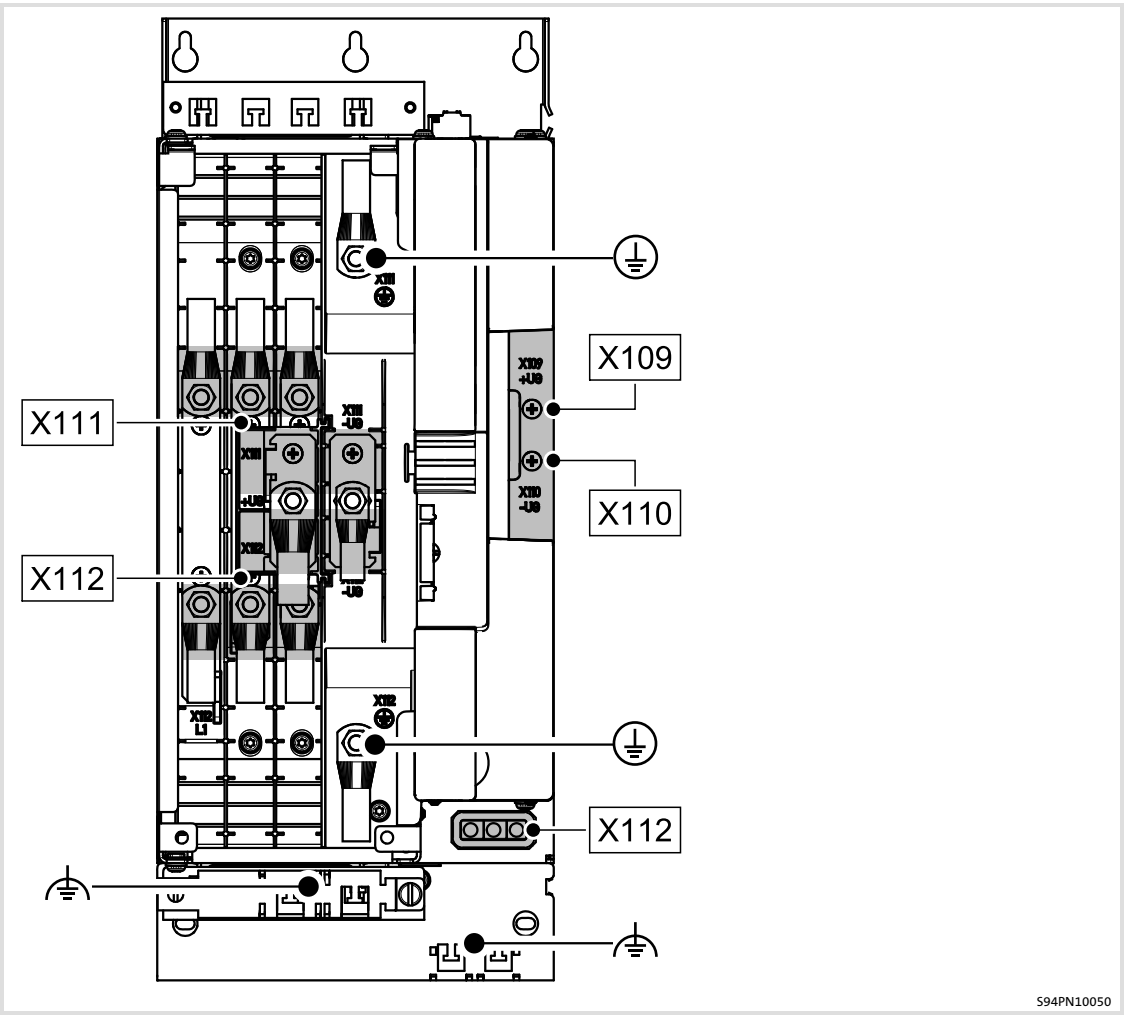

Fig. 5-9 Arrangement of the power connections

Mains

Terminal X111	Labelling	Description
🕮 Fig. 5-9	L1 L2 L3	Connection of the mains phases L1, L2, L3
	⏚	Connection for the supply-side PE conductor

Terminal X112	Labelling	Description
🕮 Fig. 5-9	L1 L2 L3	Alternative connection at the bottom: mains phases L1, L2, L3
	⏚	Connection for the supply-side PE conductor

Terminal data

	Max. conductor cross-section		Tightening torque		
	[mm²]	[AWG]	[Nm]	[lb-in]	
Device size 4: Connection with ring cable lug M8	50 (2 x 25)	1/0 -	8	71	SW13
Device size 5: Connection with ring cable lug M10	120 (2 x 50)	4/0 (2 x 1/0)	15	133	SW15

DC bus

Terminal X111	Labelling	Description
🕮 Fig. 5-9	+UG -UG	Connection of DC-bus voltage Cables routed upwards

Terminal X112	Labelling	Description
🕮 Fig. 5-9	+UG -UG	Connection of DC-bus voltage Cables routed downwards

Terminal data

	Max. conductor cross-section		Tightening torque		
	[mm²]	[AWG]	[Nm]	[lb-in]	
Device size 4: Connection with ring cable lug M8	70 (2 x 35)	2/0 -	8	71	SW13
Device size 5: Connection with ring cable lug M10	150 (2 x 70)	300 mcm (2 x 2/0)	15	133	SW15

External brake resistor

Terminal X112	Labelling	Description
🕮 Fig. 5-9	Rb1 Rb2	External brake resistor

Terminal data					
	Max. conductor cross-section		Tightening torque		
	[mm²]	[AWG]	[Nm]	[lb-in]	
Device size 4: flexible with wire end ferrule	16	4	2.5 ... 3.0	22.2 ... 26.6	6 x 2
Device size 5: flexible with wire end ferrule	35	1	3.2 ... 3.7	28.4 ... 32.8	6 x 2

5.7 Control terminals



Danger!

Hazardous electrical voltage

All power connections carry a hazardous electrical voltage for a longer time after mains disconnection. Observe the information regarding the discharge time on the device.

Possible consequences:

► Death or severe injuries when touching the power terminals.

Protective measures:

► Before working on the power connections, wait at least until the discharge time has passed (depending on the device, this may be up to 30 minutes).

► Make sure that all power terminals are deenergised.



Stop!

The device contains components that can be destroyed by electrostatic discharge!

Before working on the device, the personnel must ensure that they are free of electrostatic charge by using appropriate measures.

Design of the cables

► The cables used must comply with the approvals required for the location (e.g. UL).

► The effectiveness of a shielded cable is reached by:
  – Providing a good shield connection through large-surface shield contact.
  – Using only braided shields with low shield resistance made of tin-plated or nickel-plated copper braid.
  – Using braided shields with an overlap rate > 70 % and an overlap angle of 90 °.
  – Keeping unshielded cable ends as short as possible.

The following connections need not be shielded:

► 24 V supply

► Digital signals (inputs and outputs)

24 V supply

The devices can only function correctly when the 24-V supply is switched on!

E94APNE0104 and E94APNE0364:

Terminal X11	Labelling	Description
 SSP9400X11	GE	GND external supply
	24E	24 V external supply through safely separated power supply unit (SELV/PELV) IEC 61131-2, 19.2 ... 28.8 V, residual ripple max. ±5 % Current during operation: 450 mA Starting current: 4 A for 100 ms

Terminal data				
	Conductor cross-section		Tightening torque	
	[mm²]	[AWG]	[Nm]	[lb-in]
Flexible	0.2 ... 2.5	24 ... 12	Spring terminal	
With wire end ferrule				

Stripping length / contact length: 10 mm

E94APNE1004 and E94APNE2454:

Terminal X11	Labelling	Description
 9400SSP000X2	GE	GND external supply
	24E	24 V external supply through safely separated power supply unit (SELV/PELV) IEC 61131-2, 19.2 ... 28.8 V, residual ripple max. ±5 % Current during operation: 1.4 A Starting current: 4 A for 100 ms
	SB	Reserved

Terminal data				
	Conductor cross-section		Tightening torque	
	[mm²]	[AWG]	[Nm]	[lb-in]
Flexible	0.2 ... 2.5	24 ... 12	Spring terminal	
With wire end ferrule				

Stripping length / contact length: 10 mm

State bus

Power supply modules are not designed as nodes on the state bus of the controller.

Digital inputs, digital outputs

Terminal X12	labelling	Description	
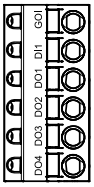 SSP9400X12	GOI	GND digital out/in	
	DI1	External control of the brake chopper; its only purpose is to synchronise the brake choppers if a second power supply module is used.	
	DO1	without function	
	DO2	Brake chopper active: HIGH level	
	DO3	Short circuit of brake chopper, active: LOW level (fail-safe)	Reset by switching of 24 V at X11.
	DO4	Overtemperature of heatsink, active: LOW level (fail-safe)	

Terminal data				
	Conductor cross-section		Tightening torque	
	[mm²]	[AWG]	[Nm]	[lb-in]
Flexible	0.2 ... 2.5	24 ... 12	Spring terminal	
With wire end ferrule				

Stripping length / contact length: 10 mm

Synchronisation

The device-internal brake chopper operates automatically and independently even if the control inputs are not wired.

Depending on the selected mains voltage, the brake resistor is connected if the DC-bus voltage is exceeded (e.g. due to excessive braking energy).

If the brake choppers of power supply modules in a DC-bus connection need to be synchronised, proceed as follows:

1. The 24-V supply of the control card (X11) must be independent of the mains voltage at the mains connection and switched on.
2. All power supply modules of the DC-bus connection must have the same brake chopper threshold (according to the mains).
3. The DO2 (X12) digital output of the master power supply module needs to be wired to the DI1 (X12) digital input of every other power supply module of the DC-bus connection. The GOI connections (X12) of all power supply modules of the DC-bus connection must be interconnected.

5.8 Final works

How to proceed:

► Adjust the setting for the mains voltage/brake chopper threshold to the mains

Setting of mains voltage/brake chopper threshold			2
Pos. D	U_{LN} [V]	U_{BRmax} [V]	1
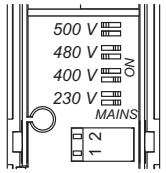	500	790	OFF OFF
	480	765	ON OFF
	400	725	OFF ON
	230	390	ON ON

► Switch on the 24 V supply

► Check the operating status by means of the LED display

If you want to continue commissioning:

► Switch on the mains

6 Regenerative power supply modules

6.1 Device features

The most important device features at a glance:

- Regenerative power supply modules supply the DC buses of several controllers of a drive system with energy.
- Regenerative power supply modules feed braking energy back to the AC mains.
- Regenerative power supply modules with the assigned mains filter are the central AC mains connection within DC-bus operation.
- Regenerative power supply modules have an internal brake chopper and a terminal for a brake resistor.
- Regenerative power supply modules of the 9400 series are equipped with a busbar connection (max. 100 A) for the simple connection and side-by-side mounting of the 9400 controllers.
- Regenerative power supply modules generally supply controllers of the ”Multi Drive” version. However, also controllers of the ”Single Drive” version can be implemented in a DC-bus operation if the data and notes in the ”DC-bus operation” chapter are observed.
  - Required accessories (📖 341)
  - Set-up for operation on IT systems (📖 357)
- Regenerative power supply modules are designed as multi-range voltage units (230/400/480 V).
- There are two types of regenerative power supply modules:
  - **E94ARNE0134**,
    rated current: in motor mode 26 A, in generator mode 13 A,
    device size: 3,
    Design: compact basic device with installation backplane
  - **E94ARNE0244**,
    rated current: in motor mode 47 A, in generator mode 23.5 A,
    device size: 3,
    Design: compact basic device with installation backplane
- Regenerative power supply modules are assigned to specifically designed mains filters and can only be operated with them.
- Regenerative power supply modules and filters can be mounted in the mounting grid of the 9400 series.
- Regenerative power supply modules allow parallel supply. Your Lenze contact will be pleased to help you with the dimensioning.

6.2 General data and operating conditions

General data

Conformity and approval			
Conformity			
CE	2014/35/EU	Low-Voltage Directive	
CE	2014/30/EU	EMC Directive	
EAC	TP TC 004/2011 (TP ZU 004/2011)	Regarding the safety of low-voltage equipment	Eurasian conformity TR ZU: Technical regulation of the tariff union
EAC	TP TC 020/2011 (TP ZU 020/2011)	Electromagnetic compatibility of technical products	Eurasian conformity TR ZU: Technical regulation of the tariff union
Approval			
$_{C}UL_{US}$	UL61800-5-1	Industrial Control Equipment (File No. E132659) for USA	
	CSA C22.2 No. 274-13	Industrial Control Equipment (File No. E132659) for Canada	

Mains data			
Mains types	With earthed Y point	Unrestricted use	The measures described for IT systems must be observed and carried out in all systems (TN, TT and IT) and for all interconnected modules (📖 324)!
	IT systems	Unrestricted use	
Noise emission	EN 61800-3	With E94AZMR0xx4**S**DB mains filter: 6 x 10 m, C2 With E94AZMR0xx4**L**DB mains filter: 10 x 50 m, C2	
		Radiation: category C3	
Noise immunity (according to requirements of EN 61800-3)			
Electrostatic discharge (ESD)	EN 61000-4-2	8 kV for air discharge, 4 kV for contact discharge to housing	
Radio frequency			
Conducted	EN 61000-4-6	150 kHz ... 80 MHz, 10 V/m 80% AM (1kHz)	
Interference (housing)	EN 61000-4-3	80 MHz ... 1000 MHz, 10 V/m 80% AM (1kHz)	

Protection of persons and devices			
Enclosure	EN 60529	IP 20	Not in the wire range of the lower terminals
	NEMA 250	Protection against contact in accordance with type 1	
Insulation resistance	EN 61800-5-1	Overvoltage category III from 2000 m amsl: external measures for complying with the overvoltage category II are required, e.g. ● connecting isolating transformer upstream ● connecting overvoltage protection system upstream	
Insulation of control circuits	EN 61800-5-1	up to 2000 m amsl: Safe mains isolation by double/reinforced insulation for mains with neutral earthing with a rated voltage for the external conductor/star point up to 300 V. from 2000 m amsl: If an overvoltage protection system is connected upstream, additional external separating measures are required for maintaining the safe mains isolation.	
Short-circuit strength	EN 61800-5-1	DC-bus connection: Not short-circuit-proof Brake resistor connection: without restrictions Control connections: without restrictions	
Discharge current	EN 61800-5-1	> 3.5 mA	Observe regulations and safety instructions!
Cyclic mains switching		Cyclic mains switching of 5 times in 5 minutes is permissible without restrictions.	

Mounting conditions		
Mounting place		in the control cabinet
Mounting position		vertical
Clearance		
above/beneath		Comply with the device-relating mounting instructions.
at the side		Can be installed in a row without any clearance

Supply conditions for the regenerative power supply module		
AC mains operation		Connection at the assigned mains filter
DC-bus operation		Direct connection of the axis modules via terminals or busbar systems See the chapter on DC-bus operation in the Hardware Manual for further information.

Environmental conditions		
Climate		
Storage	IEC/EN 60721-3-1	1K3 (-25 ... +60 °C)
Transport	IEC/EN 60721-3-2	2K3 (-25 ... +70 °C)
Operation	IEC/EN 60721-3-3	3K3 (-10 ... +55 °C) Current derating from +45 ... +55 °C: 2.5 %/°C
Site altitude		0 ... 4000 m amsl 1000 ... 4000 m amsl: current derating of 5 %/1000 m
Pollution	EN 61800-5-1	Degree of pollution 2
Vibration resistance (9.81 m/s² = 1 g)		
Transport	IEC/EN 60721-3-2	2M2
	EN 61800-2	2 ... 9 Hz: Amplitude 3.5 mm
		10 ... 200 Hz: acceleration resistant up to 10 m/s²
		200 ... 500 Hz: acceleration resistant up to 15 m/s²
Operation	Germanischer Lloyd	5 ... 13.2 Hz: Amplitude ±1 mm 13.2 ... 100 Hz: acceleration resistant up to 0.7 g
	IEC/EN 60068-2-6	10 ... 57 Hz: Amplitude 0.075 mm
		57 ... 150 Hz: Acceleration resistant up to 1 g

Assignment of filters to standard devices

Note!

The operation of the regenerative power supply modules is only permissible with an assigned mains filter.

Mains filter	Regenerative power supply module		Device size
	Standard device	Installation backplane	
E94AZMR0264SDB E94AZMR0264LDB	E94ARNE0134	E94AZPP0364	GG3
E94AZMR0474SDB E94AZMR0474LDB	E94ARNE0244		

E94AZMR0xx**SD**B -> "**s**hort **d**istance" E94AZMR0xx**LD**B -> "**l**ong **d**istance"

General electrical data

Type	Power loss P_V [W]	
	Total (when operating with I_{aN})	Constant (control electronics only)
E94ARNE0134	150	40
E94ARNE0244	230	40

	Power loss	Inductance	Regenerative inductance	Voltage drop
	P_V [W]	L [mH]	L_{gen} [mH]	ΔU [V]
E94AZMR0264SDB	65	0.77 ±10 %	0.84 ±10 %	6.3
E94AZMR0264LDB	72			
E94AZMR0474SDB	85	0.42 ±10 %	1.54 ±10 %	6.2
E94AZMR0474LDB	101			

6.3 Rated data

6.3.1 Overview

Input data (on the supply side)

	Voltage [V]	Frequency [Hz]	Rated current [A]		Number of phases
			up to +45 °C ①	up to +55 °C ①	
E94ARNE0134					
In motor mode	230/400/480	50/60	26/26/26	19.5/19.5/19.5	3
In generator mode	230/400/480	50/60	13/13/13	9.8/9.8/9.8	3
E94ARNE0244					
In motor mode	230/400/480	50/60	47/47/47	35/35/35	3
In generator mode	230/400/480	50/60	23.5/23.5/23.5	17.6/17.6/17.6	3

① Temperature in the control cabinet

Output data (on the DC side)

	Voltage [V]	Frequency [Hz]	Rated current [A]		Number of phases
			up to +45 °C ①	up to +55 °C ①	
E94ARNE0134					
In motor mode	325/565/675	0 (DC)	32/32/32	24/24/24	-
In generator mode	345/586/699	0 (DC)	16/16/16	12/12/12	-
E94ARNE0244					
In motor mode	325/565/675	0 (DC)	57/57/57	43/43/43	-
In generator mode	325/565/699	0 (DC)	28.5/28.5/28.5	21.4/21.4/21.4	-

① Temperature in the control cabinet

6.3.2 Operation at rated mains voltage 230 V

Input data (on the supply side)

Mains	Voltage	Voltage range	Frequency range
	U_{Lrated} [V]	U_{Lrated} [V]	f [Hz]
3/PE AC	230	180 - 0 % ... 264 + 0 %	45 - 0 % ... 65 + 0 %

Type	Voltage [V]	Continuous input power S_L [kVA]
E94ARNE0134		
In motor mode	230	10.3
In generator mode	230	5.2
E94ARNE0244		
In motor mode	230	18.7
In generator mode	230	9.4

Output data (on the DC side)

Mains	Voltage U_{DC} [V]	Voltage range U_{DC} [V]	Frequency range f [Hz]
2/PE DC	325	260 - 0 % ... 370 + 0 %	-

Type	Output current and output power					
	100 %		5-s cycle		3-min cycle	
	I_{DC} [A]	P_{DC} [kW]	I_{DC} [A]	P_{DC} [kW]	I_{DC} [A]	P_{DC} [kW]
E94ARNE0134						
In motor mode	32	8.6	96	25.8	48	12.9
In generator mode	16	4.3	48	12.9	24	6.4
E94ARNE0244						
In motor mode	57	15.6	171	46.6	86	23.3
In generator mode	28.5	7.8	87	23.3	44	11.6

100 % Permanent rated values
5-s cycle Cycle for the second-range
(0.5 s overload/4.5 s recovery time with 75 % of the permanent rated value)
3-min cycle Cycle for the minute-range
(60 s overload/120 s recovery time with 75 % of the permanent rated value)

Rated data for internal brake chopper

Switching threshold U_{BRmax}: 345 V

Type	R_{Bmin} [Ω]	I_{BRmax} [A]	P_{BRmax} [kW]	I_{BRd} [A]	P_{Bd} [kW]	t_Z [s]	t_{on} [s]	t_{fp} [s]
E94ARNE0134	18.0	19.2	6.6	9.4	1.6	150	15	15
E94ARNE0244	9.0	38.3	13.2	21.7	4.2	150	15	15

R_{Bmin}	Minimum brake resistance, nominal value ±10 %
I_{BRmax}	Peak current
P_{BRmax}	Peak braking power
I_{BRd}	Continuous current RMS - important for the dimensioning of the cables
P_{Bd}	Continuous braking power
t_Z	Cycle time, periodic load change with running time and recovery time
t_{on}	Running time
$t_Z - t_{on}$	Recovery time
t_{fp}	Maximum running time without initial load and compliance with the recovery time

Note on the brake chopper data

Due to thermal load, the resistance value changes and therefore the dependent rated data as well.

The brake chopper can output the peak braking power maximally for the specified time t_{on} within a cycle time t_Z.

The brake chopper can output the peak braking power from unloaded states once for the time t_{fp}, e. g. after mains connection or after a recovery time of > 5 x t_Z.

If the times are exceeded, the brake chopper is clocked so that only the continuous braking power is output. This serves to the protection of the brake chopper, however, it does not protect the brake resistor. The brake resistor connected can be protected separately by parameterisation (C00129 ... C00133) or a thermal contact.

Further information can be found in the software manual.

6.3.3 Operation at rated mains voltage 400 V

Input data (on the supply side)

Mains	Voltage	Voltage range	Frequency range
	U_{Lrated} [V]	U_{Lrated} [V]	f [Hz]
3/PE AC	400	320 - 0 % ... 440 + 0 %	45 - 0 % ... 65 + 0 %

Type	Voltage [V]	Continuous input power S_L [kVA]
E94ARNE0134		
In motor mode	400	18.0
In generator mode	400	9.0
E94ARNE0244		
In motor mode	400	32.5
In generator mode	400	16.3

Output data (on the DC side)

Mains	Voltage U_{DC} [V]	Voltage range U_{DC} [V]	Frequency range f [Hz]
2/PE DC	565	455 - 0 % ... 620 + 0 %	-

Type	Output current and output power					
	100 %		5-s cycle		3-min cycle	
	I_{DC} [A]	P_{DC} [kW]	I_{DC} [A]	P_{DC} [kW]	I_{DC} [A]	P_{DC} [kW]
E94ARNE0134						
In motor mode	32	15	96	44.9	48	22.4
In generator mode	16	7.5	48	22.4	24	11.2
E94ARNE0244						
In motor mode	57	27	171	81.1	86	40.5
In generator mode	28.5	13.5	87	40.5	44	20.2

100 % Permanent rated values
5-s cycle Cycle for the second-range
(0.5 s overload/4.5 s recovery time with 75 % of the permanent rated value)
3-min cycle Cycle for the minute-range
(60 s overload/120 s recovery time with 75 % of the permanent rated value)

Rated data for internal brake chopper

Switching threshold U_{BRmax}: 586 V

Type	R_{Bmin} [Ω]	I_{BRmax} [A]	P_{BRmax} [kW]	I_{BRd} [A]	P_{Bd} [kW]	t_Z [s]	t_{on} [s]	t_{fp} [s]
E94ARNE0134	27.0	21.7	12.7	10.6	3.0	150	15	15
E94ARNE0244	18.0	32.6	19.1	18.4	6.1	150	15	15

R_{Bmin}	Minimum brake resistance, nominal value ±10 %
I_{BRmax}	Peak current
P_{BRmax}	Peak braking power
I_{BRd}	Continuous current RMS - important for the dimensioning of the cables
P_{Bd}	Continuous braking power
t_Z	Cycle time, periodic load change with running time and recovery time
t_{on}	Running time
$t_Z - t_{on}$	Recovery time
t_{fp}	Maximum running time without initial load and compliance with the recovery time

Note on the brake chopper data

Due to thermal load, the resistance value changes and therefore the dependent rated data as well.

The brake chopper can output the peak braking power maximally for the specified time t_{on} within a cycle time t_Z.

The brake chopper can output the peak braking power from unloaded states once for the time t_{fp}, e. g. after mains connection or after a recovery time of > 5 x t_Z.

If the times are exceeded, the brake chopper is clocked so that only the continuous braking power is output. This serves to the protection of the brake chopper, however, it does not protect the brake resistor. The brake resistor connected can be protected separately by parameterisation (C00129 ... C00133) or a thermal contact.

Further information can be found in the software manual.

6.3.4 Operation with rated mains voltage 480 V

Input data (on the supply side)

Mains	Voltage	Voltage range	Frequency range
	U_{Lrated} [V]	U_{Lrated} [V]	f [Hz]
3/PE AC	480	340 - 0 % ... 528 + 0 %	45 - 0 % ... 65 + 0 %

Type	Voltage [V]	Continuous input power S_L [kVA]
E94ARNE0134		
In motor mode	480	21.6
In generator mode	480	10.8
E94ARNE0244		
In motor mode	480	39.0
In generator mode	480	19.5

Output data (on the DC side)

Mains	Voltage U_{DC} [V]	Voltage range U_{DC} [V]	Frequency range f [Hz]
2/PE DC	675	480 - 0 % ... 746 + 0 %	-

Type	Output current and output power					
	100 %		5-s cycle		3-min cycle	
	I_{DC} [A]	P_{DC} [kW]	I_{DC} [A]	P_{DC} [kW]	I_{DC} [A]	P_{DC} [kW]
E94ARNE0134						
In motor mode	32	18.0	96	53.8	48	26.9
In generator mode	16	9.0	48	26.9	24	13.4
E94ARNE0244						
In motor mode	57	32.4	171	97.3	86	48.7
In generator mode	28.5	16.2	87	48.6	44	24.3

100 % Permanent rated values
5-s cycle Cycle for the second-range
(0.5 s overload/4.5 s recovery time with 75 % of the permanent rated value)
3-min cycle Cycle for the minute-range
(60 s overload/120 s recovery time with 75 % of the permanent rated value)

Rated data for internal brake chopper

Switching threshold U_{BRmax}: 727 V

Type	R_{Bmin} [Ω]	I_{BRmax} [A]	P_{BRmax} [kW]	I_{BRd} [A]	P_{Bd} [kW]	t_Z [s]	t_{on} [s]	t_{fp} [s]
E94ARNE0134	27.0	25.9	18.1	12.7	4.3	150	15	15
E94ARNE0244	18.0	38.8	27.9	21.9	8.7	150	15	15

R_{Bmin}	Minimum brake resistance, nominal value ±10 %
I_{BRmax}	Peak current
P_{BRmax}	Peak braking power
I_{BRd}	Continuous current RMS - important for the dimensioning of the cables
P_{Bd}	Continuous braking power
t_Z	Cycle time, periodic load change with running time and recovery time
t_{on}	Running time
$t_Z - t_{on}$	Recovery time
t_{fp}	Maximum running time without initial load and compliance with the recovery time

Note on the brake chopper data

Due to thermal load, the resistance value changes and therefore the dependent rated data as well.

The brake chopper can output the peak braking power maximally for the specified time t_{on} within a cycle time t_Z.

The brake chopper can output the peak braking power from unloaded states once for the time t_{fp}, e. g. after mains connection or after a recovery time of > 5 x t_Z.

If the times are exceeded, the brake chopper is clocked so that only the continuous braking power is output. This serves to the protection of the brake chopper, however, it does not protect the brake resistor. The brake resistor connected can be protected separately by parameterisation (C00129 ... C00133) or a thermal contact.

Further information can be found in the software manual.

6.3.5 Regenerative feedback with brake chopper

Operation in motor mode

The regenerative power supply modules provide the energy for the DC bus from which the axis controllers are supplied. If the peak voltage of the mains is higher than the peak voltage of the DC bus, a current flows from the mains via the DC-bus into the DC-bus connection.

Operation in generator mode

When drives are decelerated, the excessive energy is fed into the DC bus via the controllers. The DC-bus voltage rises.

Regenerative feedback

If the DC-bus voltage exceeds the peak value of the mains voltage, the regenerative feedback is activated.

Up to the maximum regenerative power P_{Mmax}, the controller can dissipate the energy into the mains. If the regenerative energy and, accordingly, the DC-bus voltage continues to rise, the ”Clamp mode” device protection is activated. This leads to an overvoltage switch-off.

In this way, the devices are protected, but the drives coast to standstill.

Regenerative feedback with brake chopper

It is possible to use the integrated brake chopper to avoid the ”Clamp mode”. For this, connect the brake resistor recommended as additional component.

With regenerative powers of $P_{gen} > P_{Bron}$, the brake chopper starts to dissipate part of the energy via the brake resistor. The following formula applies: $P_{gen} = P_{Mgen} + P_{Br}$.

The following diagram shows how the regenerative power is divided between the mains and the brake resistor.

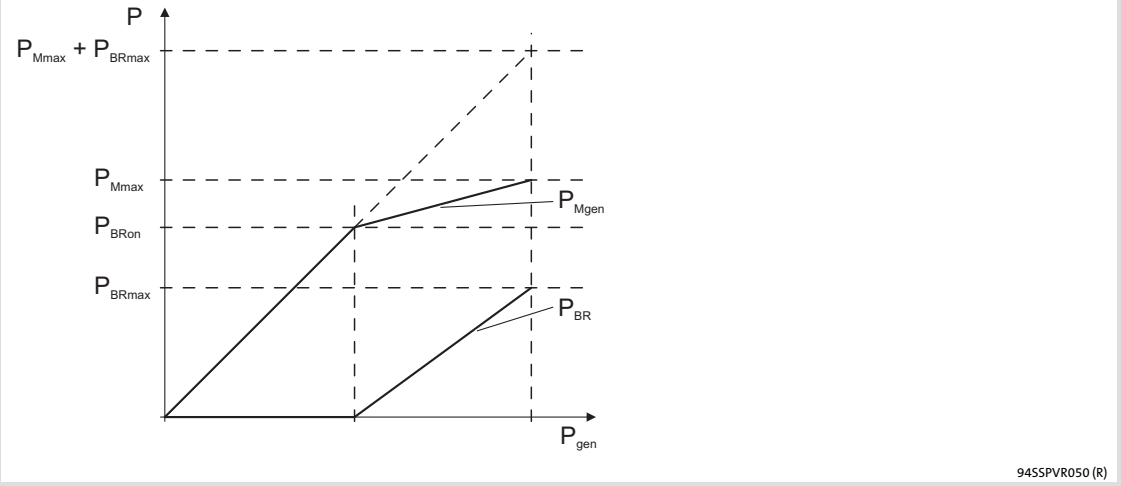

Fig. 6-1 Power regeneration - power characteristics for deceleration in the limit range (legend: Fig. 6-2)

Example: Deceleration with power recovery and brake chopper
The following diagram shows the time characteristics of the speed and the corresponding power. Regenerative powers (into the DC bus connection) are shown as negative values. This energy must be dissipated by the regenerative power supply module to the supply system. In the example, the regenerative power is that high that a brake chopper is required.

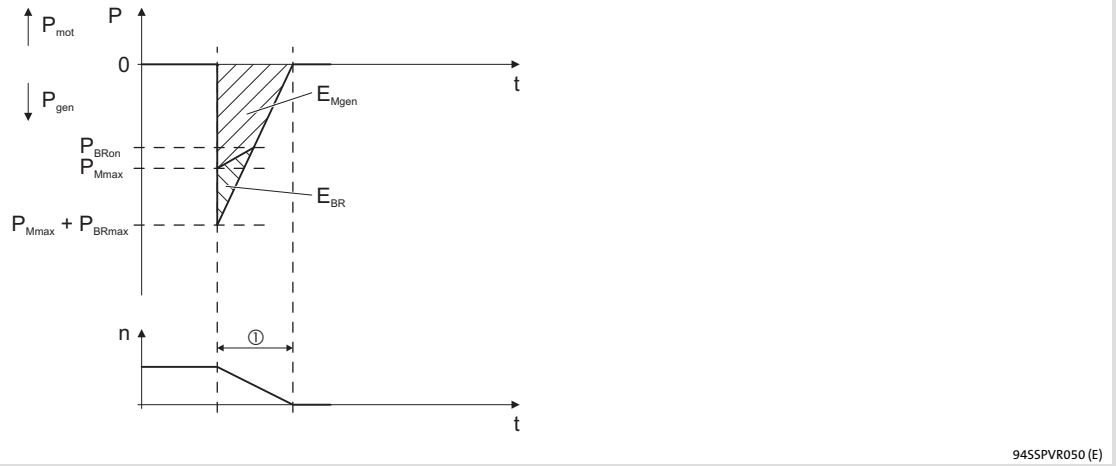

Fig. 6-2 Power regeneration - energy characteristics for deceleration in the limit range

P	Power (general)
t	Time axis
n	Speed
P_{mot}	Power in motor mode
P_{gen}	Regenerative power
P_{Mgen}	Regenerative power into mains
P_{Mmax}	max. regenerative power into mains (= cycle 1, P_{DC})
P_{BR}	Power loss via brake resistor
P_{BRmax}	max. power loss via brake resistor
P_{Bron}	Switch-on position of brake chopper
E_{Mgen}	Regenerative energy into mains
E_{BR}	Energy loss via brake resistor
①	Braking

The hatched area E_{Mgen} shows the energy dissipated to the supply system. The hatched area E_{Br} shows the power loss in the brake resistor. With cyclic processes, the power loss must be referred to the cycle time t (mean time between two deceleration processes) to obtain the mean power loss (=continuous power) of the brake resistor: $P_{BrAV} = E_{Br} / t$. The mean power loss is important for the dimensioning of the brake resistor. Mains voltage tolerances and resistance value changes due to the tolerance and the temperature rise must be considered.

Type	U_r [V]	$P_{DC\,(100\,\%)}$ [kW]	P_{Mmax} [kW]	P_{BRmax} [kW]	$P_{Mmax} + P_{BRmax}$ [kW]	P_{Bron} [kW]	U_{BRmax} [V]
E94ARNE0134	230	4.3	12.9	6.6	19.5	9.9	345
E94ARNE0244		7.8	23.3	13.2	36.5	17.9	
E94ARNE0134	400	7.5	22.4	12.7	35.1	17.2	586
E94ARNE0244		13.5	40.5	19.1	59.6	31.0	
E94ARNE0134	480	9.0	26.9	18.1	45.0	18.8	699
E94ARNE0244		16.2	48.6	27.1	75.7	34.0	

6.3.6 Fuses and cable cross-sections

Mains	Voltage	Voltage range	Frequency range
	U_{Lrated} [V]	U_{Lrated} [V]	f [Hz]
3/PE AC	230 ... 480	180 - 0 % ... 528 + 0 %	45 ... 65

Installation in accordance with EN 60204-1

The data are recommendations. Other dimensioning/laying systems are possible (e.g. according VDE 0298-4).

The cable cross-sections apply under the following conditions:

- Use of PVC-insulated copper cables
- Conductor temperature < 70 °C, ambient temperature < 45°C
- No bundling of cables or cores
- Three loaded cores

Type	①	②	L1, L2, L3 - laying system			FI [1]
			B2	C	F	
	[A]	[A]	[mm²]	[mm²]	[mm²]	[mA]
E94AZMR0264xDB E94ARNE0134	C32	-	10	6	-	–
E94AZMR0474xDB E94ARNE0244	-	80	25	16	-	–

① Circuit breaker
② Fuse of the utilisation category gG/gL or semiconductor fuses or the utilisation category gRL
1) Universal-current-sensitive earth-leakage circuit breaker, RCD type B
If several devices or cable lengths > 50 m are used, it is possible that the circuit breaker will respond, depending on the type of cable and the switching frequency.
Observe national and regional regulations!

Installation to UL

Only use UL-approved cables, fuses and fuse holders.

UL fuse: Voltage 600 V; CC, J or T class fuses

Type	standard installation		motor group installation		FI [1]
	① valeur nominale (max.)	L1, L2, L3	① valeur nominale (max.)	L1, L2, L3	
	[A]	[AWG]	[A]	[AWG]	[mA]
E94AZMR0264xDB E94ARNE0134	45	6	70	3	–
E94AZMR0474xDB E94ARNE0244	70	3	70	3	–

① Fuse
1) Universal-current-sensitive earth-leakage circuit breaker, RCD type B
If several devices or cable lengths > 50 m are used, it is possible that the circuit breaker will respond, depending on the type of cable and the switching frequency.
Observe national and regional regulations!

6.3.7 Current-time diagrams

In addition to the data for overcurrent operation within the 5-s cycle or 3-min cycle, here you are provided with information on the dimensioning of application-oriented cycles.

You can use the following information to find out permissible load periods with overcurrents and necessary recovery times with limited mains currents. If the thus determined mains currents and times are adhered to, the Ixt monitoring function for the protection of devices will not respond.

Characteristics

The following characteristics (”Current-time diagrams”) describe the device utilisation via amperage and the duration of current flow.
The left part of the diagram (negative time data) represents the overload phase, while the right part of the diagram (positive time data) shows the relieving phase.
Devices with an identical Ixt behaviour are combined within a diagram. A second diagram enlarges a cutout area to improve the clearness of display.

Requirements

- Mains voltage

  In the diagrams, a mains voltage of U_N = 400 V is assumed. Current derating depending on the mains voltage is also necessary in the case of the devices. In other words, the currents are weighted differently in the Ixt monitoring function. The continuous currents indicated there are then the 100 % values that are needed for working with the diagrams.

- Ambient temperature

  The ambient temperature may be maximally T_{Amb} < 45 °C. In the case of higher ambient temperatures the reduced continuous currents have to be taken into consideration.

- Regenerative mode/motoring mode

  The application example relates to regenerative mode. In motoring mode, the permissible mains currents are doubled (c.f. rated data).

Application example

- Drive task
  - A mains current of I_{ol} = 4.0 A is needed for a time of t_{ol} = 3 s.
  - During the recovery phase, a mains current of I_{re} = 1.0 A flows.
- Problem
  - How long is the recovery phase t_{re} when the E94ARNE0xx4 controller is used?
- The currents required are based on the rated device current:
  - I_{ol} = 4.0 A/2.5 A = 160 % - selected characteristic: 175 %
  - I_{re} = 1.0A/2.5 A = 40 % - selected characteristic: 50 %
  - Due to the short overcurrent time of t_{ol} = 3 s, the diagram of part of the E94ARNE0xx4 device is made use of.
- Procedure within the diagram
  - ① Beginning from the time axis at t_{ol} = 3 s, draw a straight line to the selected characteristic at 175 % (corresponds to the minimum required mains current I_{ol}).
  - ② Draw a straight line from the point of intersection horizontally to the right to the selected characteristic, the recovery phase, at 50 %.
  - ③ Draw a perpendicular line from the point of intersection back to the time axis.
  - ④ Read the minimum required duration of recovery on the time axis.

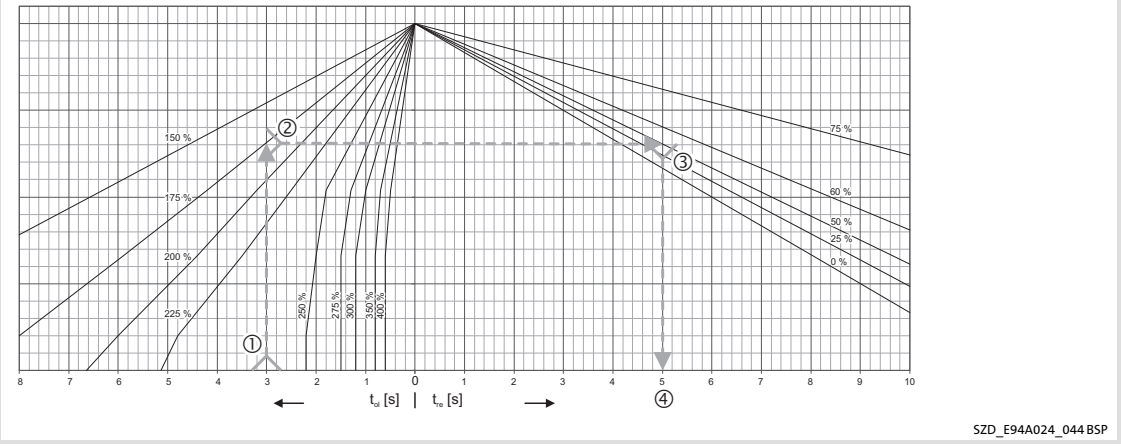

- Result in the example
  - The duration of recovery has to be at least t_{re} = 5 s!

E94ARNE0134 and E94ARNE0244

Type	V_r	100 %	f_{chopp}
	[V]	[A]	[Setting]
E94ARNE0134	400/480	in motor mode: 26.0 in generator mode: 13.0	not relevant
E94ARNE0244		in motor mode: 47.0 in generator mode: 23.5	

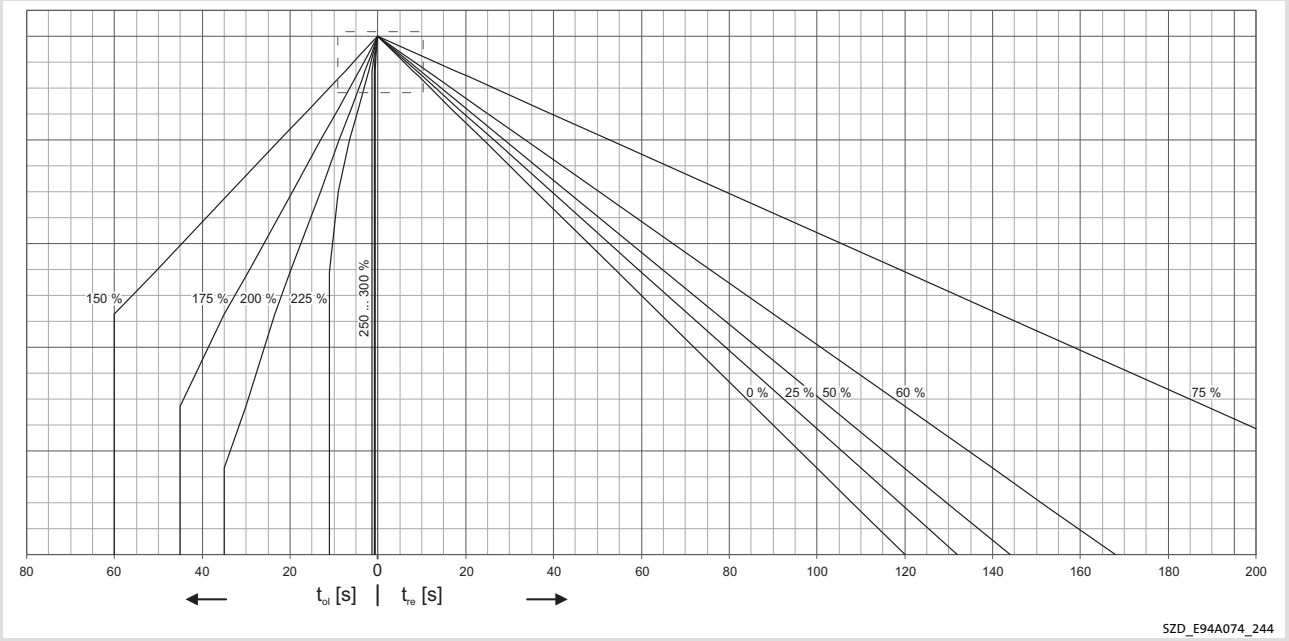

Fig. 6-3 Diagram for E94ARNE0134 and E94ARNE0244

t_{ol} Duration of the load phase
t_{re} Duration of the recovery phase

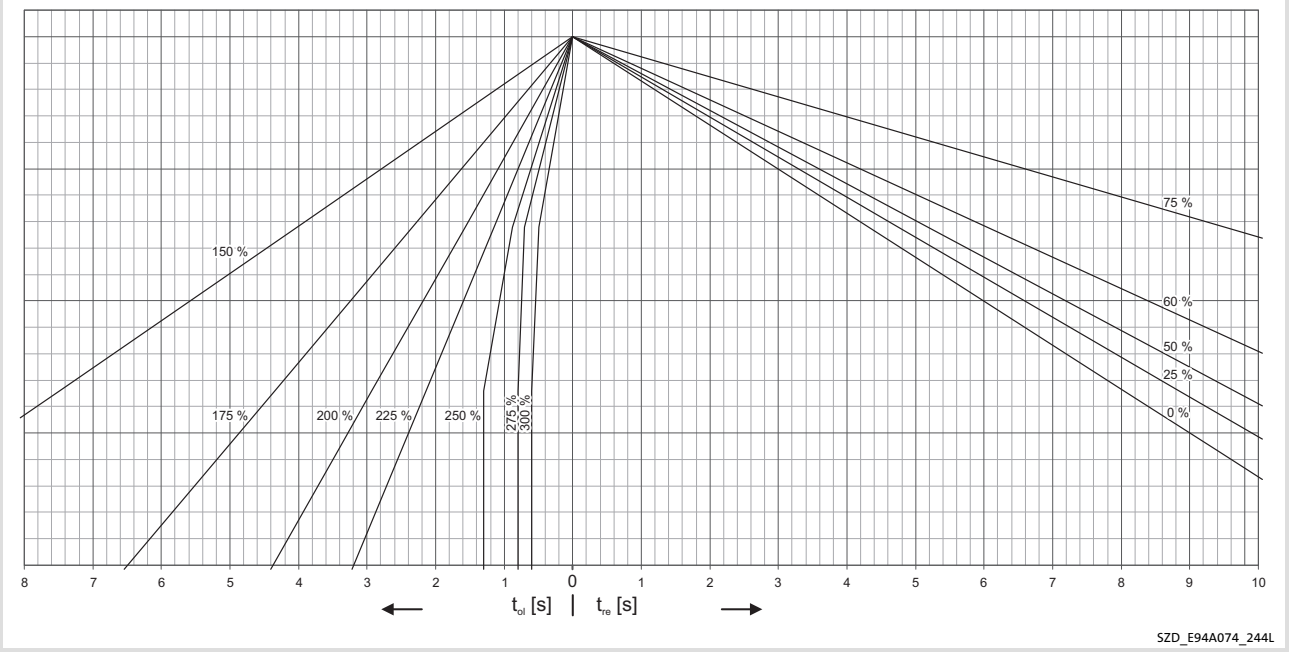

Fig. 6-4 Area cutout for E94ARNE0134 and E94ARNE0244

6.3.8 Mains filters for regenerative power supply modules

When using the mains filters assigned, conditions must be observed for compliance with EMC class C2:

- The measures for the use on IT systems must be applied to all axis modules in the interconnection (separation of internal filter components from PE, (📖 357)).
- The maximum sum total of all motor cable lengths ($\Sigma\ l_{mot}$) for the filter used must be observed.

Motor cable lengths in the interconnection

The assigned filters are designed for $\Sigma\ l_{mot}$
(E94AZMR...SDB: 60 m (= 6 x 10 m), E94AZMR...LDB: 500 m (= 10 x 50 m)).

For a different number of axis modules, $\Sigma\ l_{mot}$ can be determined from the following diagrams.

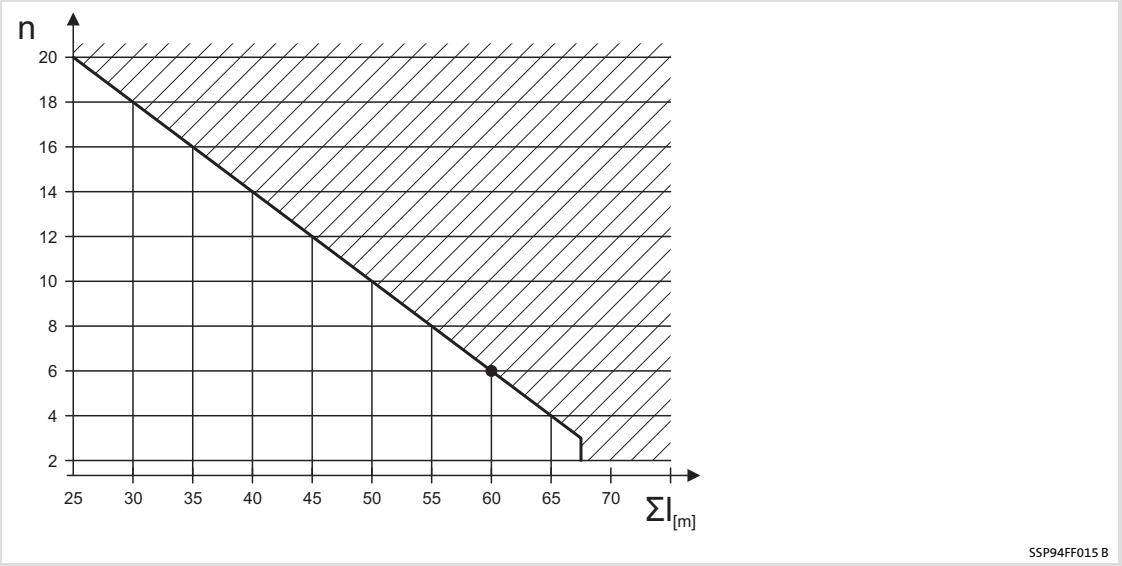

Fig. 6-5 Filter E94AZMP...SDB (short distance): total motor lengths according to number of axis modules

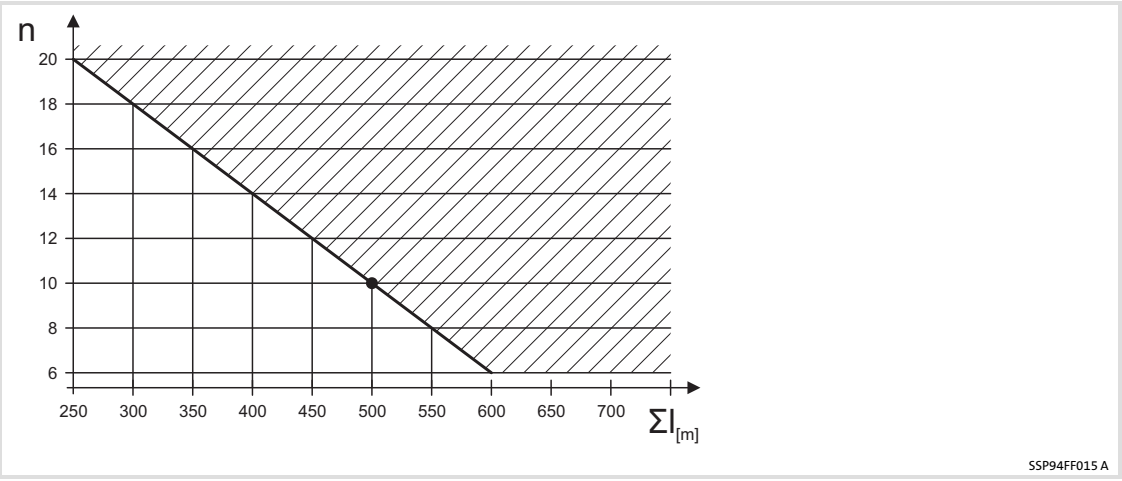

Fig. 6-6 Filter E94AZMP...LDB (long distance): total motor lengths according to axis modules

With different motor cable lengths, per axis at least 25 % of the longest cable must be considered when calculating the total motor cable length.

Example: 1	Motor cable length l_{mot} [m]		
Axis	**Actual value**	**min. 25 % of the longest cable**	**To be considered**
1	6	0.25 * 20 = 5	6
2 ... 4	3 * 10		3 * 10
5	20	⇦	20
Total	56	max. permissible for 5 axes: ∑< 60	**56**
		EMC class C2 will be complied with.	☑

Example 2	Motor cable length l_{mot} [m]		
Axis	**Actual value**	**min. 25 % of the longest cable**	**To be considered**
1 ... 4	4 * 5	0.25 * 40 = 10	4 * 10
5	40	⇦	40
Total	60	max. permissible for 5 axes: ∑< 60	**80**
		EMC class C2 will not be complied with.	☒

Example: 3	Motor cable length l_{mot} [m]		
Axis	**Actual value**	**min. 25 % of the longest cable**	**To be considered**
1 ... 3	3 * 100	⇦ 0.25 * 100 = 25	3 * 100
4	50		50
5 ... 10	6 * 15		6 * 25
Total	410	max. permissible for 10 axes: ∑ < 500	**500**
		EMC class C2 will be complied with.	☑

Example: 4	Motor cable length l_{mot} [m]		
Axis	**Actual value**	**min. 25 % of the longest cable**	**To be considered**
1 ... 4	4 * 100	⇦	4 * 100
5 ... 10	6 * 15	0.25 * 100 = 25	6 * 25
Total	490	max. permissible for 10 axes: ∑ < 500	**550**
		EMC class C2 will not be complied with.	☒

Constellations with unfavourable or intensifying parasitic couplings

Compliance with EMC category C2 may also be interfered with by other circumstances:

- Distribution of the axis modules over several control cabinets without efficient HF equipotential bonding between the mounting plates
- No use of Lenze system cables or cables with the same specifications
- Poor connection of motor cable shields
- Motor cable interruptions
- Other interference sources (e.g. switched-mode power supplies)
- Isochronous switching of the inverter output stages

6.4 Device description

This page remains blank to give you a clearly arranged overview of the following subject on the next double page.

Standard device

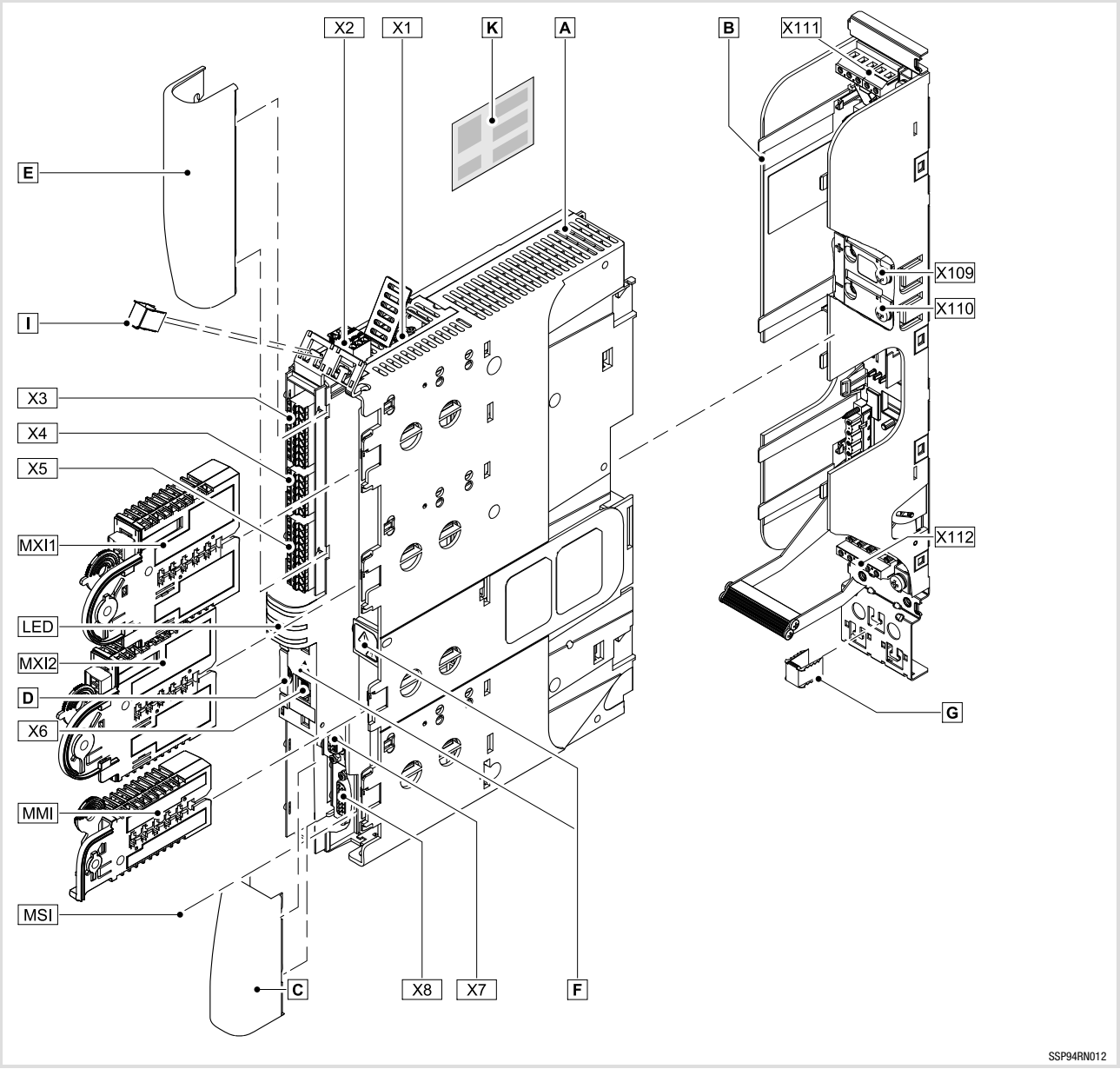

Standard device A		Design
Pos.	Description	VR module
MXI1	Expansion slot 1, e.g. for communication	☑
MXI2	Expansion slot 2, e.g. for communication	☑
MMI	Storage module slot	☑
MSI	Reserved	☐
X1	System bus (CAN), under the cover	☑
X2	24 V supply and statebus	☑
X3	Analog inputs and analog outputs	2/2
X4	Digital outputs	4
X5	Digital inputs	8
X6	Diagnostics	☑
X7	Reserved (resolver)	☐
X8	Control signals for mains filter (encoder)	☑
C	Lower cover	☑
D	Retractable nameplate	☑
E	Upper cover	☑
K	Prominent warning label close to the device!	☑

The LED display enables fast indication of several operating states.

LED	Labelling	Colour	Description
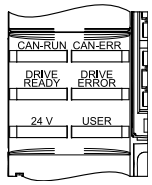 SSP94LED01	CAN-RUN	green	CAN bus ok
	CAN-ERR	red	CAN bus error
	DRIVE READY	green	Standard device is ready for operation
	DRIVE ERROR	red	Error in the standard device or application-induced
	24 V	green	24 V supply voltage ok
	USER	yellow	Message parameterised by the application

Pos.	Symbol	Description
F		**Long discharge time**: All power terminals carry hazardous electrical voltages for a longer period of time after mains disconnection! Depending on the device, this period of time may be up to 30 minutes.
		**High discharge current**: Carry out fixed installation and PE connection according to EN 61800-5-1!
		**Electrostatic sensitive devices**: Before working on the device, the personnel must be free of electrostatic charge!

Installation backplane B		Design
Pos.	Description	VR module
X111	Mains supply via mains filter/DC-bus voltage	☑
X112	Mains supply and mains power recovery via mains filter/external brake resistor	☑
X109	DC busbar +	☑
X110	DC busbar -	
G	EMC shield clamp	☑

Mains filter

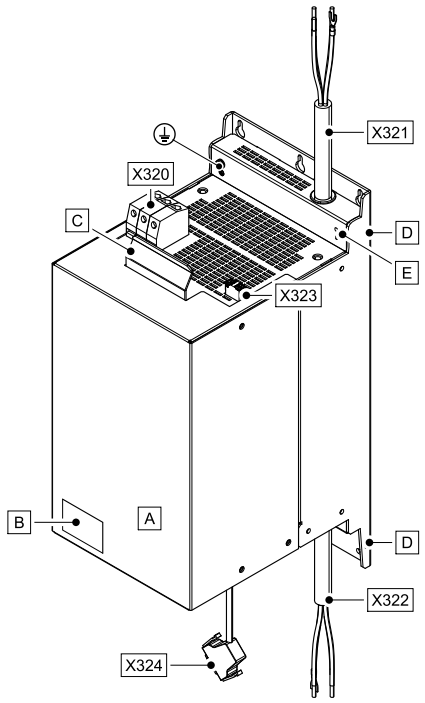

Pos.	Description
A	Mains filter
	Mounting Instructions
Pos.	**Description**
B	Nameplate
C	Lifting aid
D	Mounting aid for mounting base
E	Parking position of the IT screw
⏚	PE terminal
X320	Terminal L1 ... L3
X321	Connecting cable L1.1 ... L3.1
X322	Connecting cable L1.2 ... L3.2
X323	Terminal for 24-V supply voltage (use safely separated power supply unit (SELV/PELV), in accordance with IEC 61131-2)
X324	Mains filter control signal

6.5 Mechanical installation

6.5.1 Important notes

Note!

The devices must be installed in housings (e.g. control cabinets) to meet applicable regulations.

Stop!

Heavy device weight

The device is very heavy and must be lifted for the mounting.

Possible consequences:

- ► Injury to persons, particularly backache when lifting and holding the device, respectively
- ► Injury to persons and damage to material assets due to the device falling down

Protective measures:

- ► The device must only be carried with a load bearing system such as an indoor crane permitted for the device weight
- ► Before the transport, the hoist, the load bearing system and lifting accessories must be checked for sufficient payload and faultless status
- ► Do not remove the hoist and the lifting accessories until the device lies safe on a stable surface or is finally mounted.

- ► The mounting location must always comply with the operating conditions specified in the technical data (📖 290). Take additional measures if necessary.
- ► The mounting plate of the control cabinet must have the following properties:
  – electrically conductive
  – free of lacquer
- ► The mechanical connections must always be ensured.
- ► A free air circulation must be ensured for dissipating the heat.

6.5.2 Dimensions

Mounting grid

We recommend to provide the mounting plate with a grid pattern of M5 threaded holes for attaching the devices. This preparation enables easy attachment of the devices, and the device sizes 1, 2, ... n can thus be mounted directly adjacent to each other.

Note!

- ► Permissible are M5 screw and washer assemblies or hexagon socket screws with washer.
- ► Tightening torque: 3.0 Nm / 26 lb-in.
- ► The screw joint in the installation backplane may jut out no more than 7 mm.

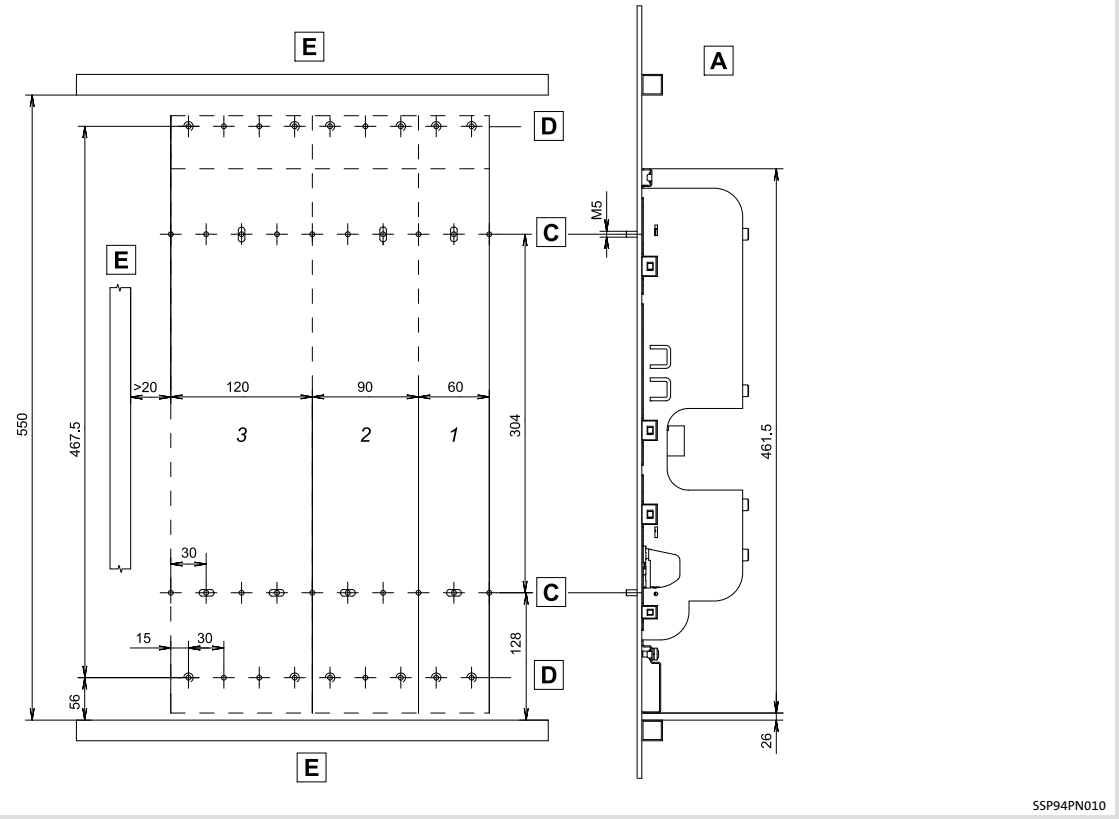

A Mounting with backplane for attaching the power supply module
C Grid hole pattern for installation backplane
D Grid hole pattern for other device sizes or built-on/footprint filters (only Single Drive)
E Cable duct
1 … 3 Device size, mounting holes used

Standard device with installation backplane

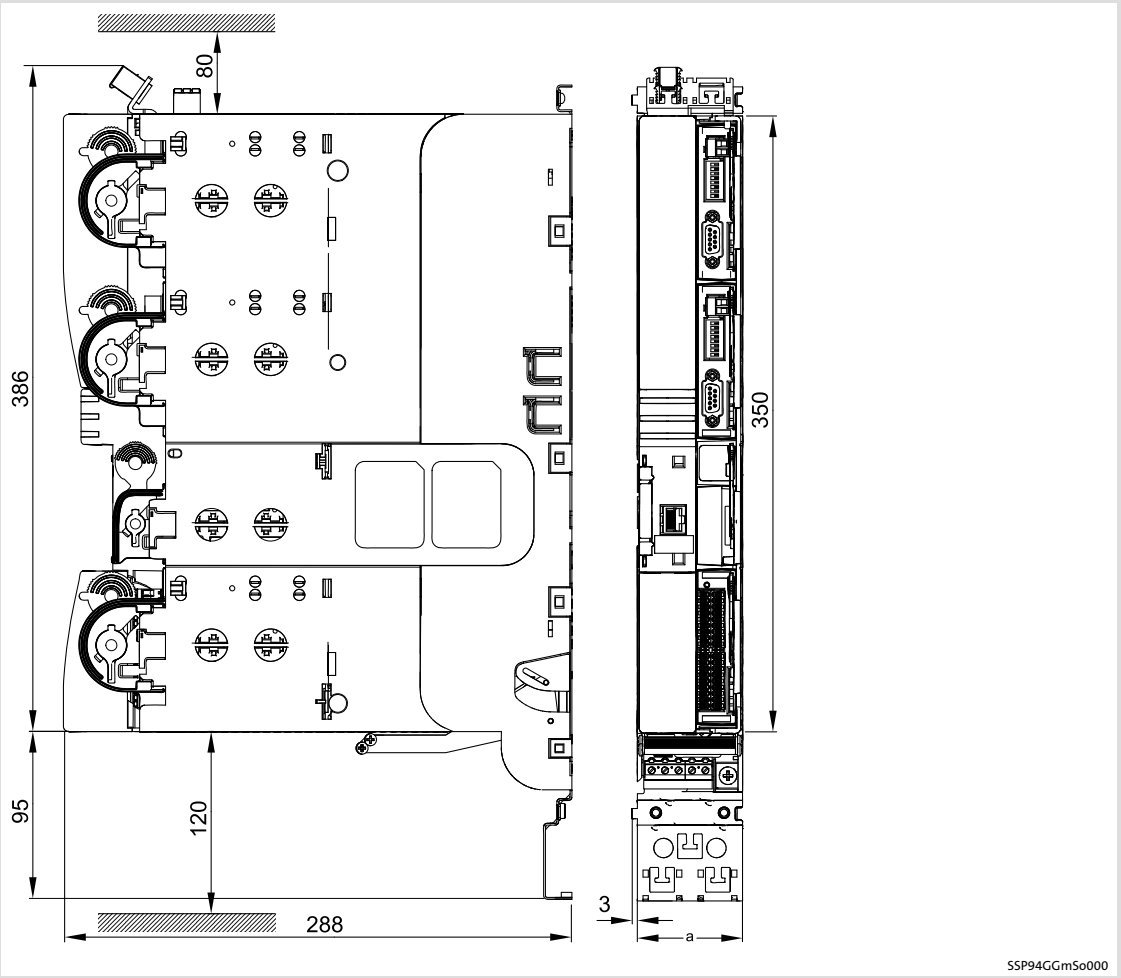

Regenerative power supply module		a	
Standard device	Installation backplane	[mm]	[kg]
E94ARNE0134 E94ARNE0244	E94AZPP0364	120	8.1

Mains filter

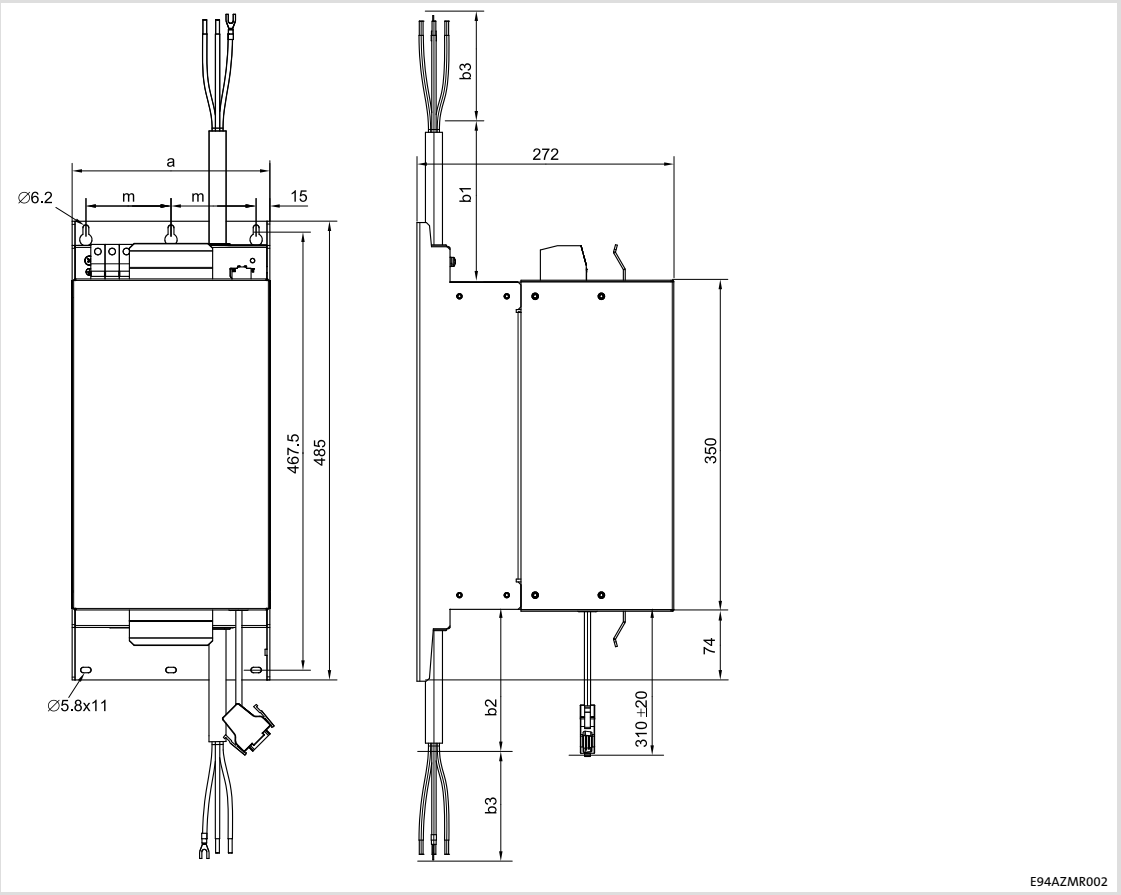

	a	m	b1	b2	b3	
	[mm]					[kg]
E94AZRM0264SDB	149	60	240 ±5	260 ±5	100 ±5	25
E94AZRM0264LDB						26
E94AZRM0474SDB	209	90	250 ±5	270 ±5	110 ±5	36
E94AZRM0474LDB						37

6.5.3 Arrangement of the devices

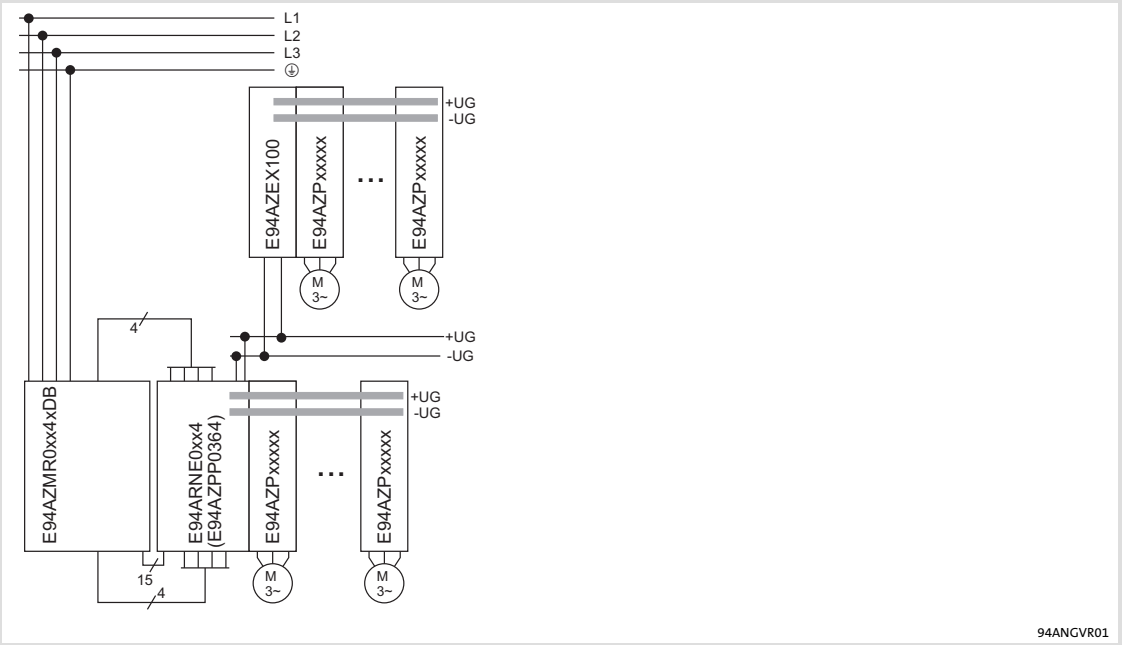

Fig. 6-7 Arrangement concept

E94AZMR0xx4xDB	Mains filter
E94ARNE0xx4	Regenerative power supply module (with E94AZPP0364 installation backplane)
E94AZEX100	DC-input module
E94AZPxxxxx	installation backplane for 9400 axis module
+UG/-UG	DC bus

A DC-bus connection with regenerative power supply module has to be planned and dimensioned taking the technical data into account.

How to arrange the devices for operation in the DC-bus connection via the DC busbars:

- ► Arrange the devices in a row from left to right.
- ► Install the supplying device on the left:
  - – Regenerative power supply module with assigned mains filter (in a first row),
  - – Input module (in the following rows).
- ► Install the multi drive axis controllers to the right from the highest to the lowest power (recommendation).
- ► For increasing the braking power also single drive axis controllers can be integrated. For this purpose, these axis controllers have to be equipped with the optional busbar mounting set (E94AZJAxxx). In order to carry out multi-supply applications, consult Lenze.

6.5.4 Mounting steps

Proceed as follows for installation:

1. Prepare mounting plate with M5 threaded holes according to the mounting grid.
   – Start on the left with the installation backplane of the DC power supply module E94AZPNxxxx.
   – Install the axis modules from the left to the right with decreasing rated power.
2. Screw the installation backplane onto the mounting plate. Do not tighten the screws yet.
   – Use M5 screw and washer assemblies or M5 hexagon socket screws with washer.
   – The screw joint in the installation backplane may jut out no more than 7 mm.
3. Align all components.
4. When busbars are used: Connect busbars.
5. Tightly screw the components onto the mounting plate.
   – Tightening torque: 3.0 Nm (26 lb-in).



Tip!

Before plugging the standard device into the installation backplane, read the chapters ”Disconnect internal PE connection” (📖 324) and ”Connecting busbars” (📖 327).

6.6 Wiring

6.6.1 Important notes

- Installation must
  - always be in accordance with the operating conditions specified in the Technical data (📖 290).
  - be carried out to EN 60204-1.
- Please observe the following when selecting the cable type:
  - The cables used must comply with the approvals required for the application (e. g. VDE, UL etc.).
  - Fuses and cable cross-sections must be dimensioned in accordance with the specifications in the documentation for the basic device.
- The described EMC properties are provided if the following conditions are complied with:
  - The devices are mounted according to the arrangement concept described.
  - The prepared cables are used and remain unchanged.

Danger!

Hazardous electrical voltage

All power connections carry a hazardous electrical voltage for a longer time after mains disconnection. Observe the information regarding the discharge time on the device.

Possible consequences:

- Death or severe injuries when touching the power terminals.

Protective measures:

- Before working on the power connections, wait at least until the discharge time has passed (depending on the device, this may be up to 30 minutes).
- Make sure that all power terminals are deenergised.



Danger!

Hazardous electrical voltage

The leakage current to earth (PE) is > 3.5 mA AC or > 10 mA DC.

Possible consequences:

► Death or severe injuries when touching the device in the event of an error.

Protective measures:

Implement the measures required in EN 61800-5-1. Especially:

► Fixed installation
  – Implement PE connection in compliance with standards.
  – Connect PE conductor twice or PE conductor cross-section ≥ 10 mm^2.
► Connection with a connector for industrial applications according to IEC 60309 (CEE):
  – PE conductor cross-section ≥ 2.5 mm^2 as part of a multi-core supply cable.
  – Provide for suitable strain relief.



Stop!

No device protection if the mains voltage is too high

The mains input is not internally fused.

Possible consequences:

► Destruction of the device if the mains voltage is too high.

Protective measures:

► Observe the maximally permissible mains voltage.
► Fuse the device correctly on the supply side against mains fluctuations and voltage peaks.



Stop!

The device contains components that can be destroyed by electrostatic discharge!

Before working on the device, the personnel must ensure that they are free of electrostatic charge by using appropriate measures.



Stop!

Overtemperature

The mains filter may become hot if permissible limit values are exceeded during operation.

Possible consequences:

► The device may be damaged or destroyed.

Protective measures:

► Wire the overtemperature disconnection with the digital DO2 output according to circuit proposal.

6.6.2 Safety instructions for the installation according to UL/CSA

Original - English

Warnings!

- Branch circuit protection:
  - Suitable for use on a circuit capable of delivering not more than 100 000 rms symmetrical amperes, 480 V max., when protected by CC, J or T class fuses.
  - Suitable for motor group installation on a circuit capable of delivering not more than 100 000 rms symmetrical amperes, 480 V max., when protected by class CC, J or T class fuses.
  - Use specified fuses as shown in the table.
  - Integral solid state short circuit protection does not provide branch circuit protection. Branch circuit protection must be provided in accordance with the National Electrical Code / Canadian Electrical Code and any additional local codes.
- The opening of the branch circuit protective device may be an indication that a fault current has been interrupted. To reduce the risk of fire or electrical shock, current-carrying parts and other components of the controller should be examined and replaced if damaged. If burnout of the current element of an overload relay occurs, the complete overload relay must be replaced.
- Max. surrounding air temperature is 45 °C.
- Max. surrounding air temperature with derating is 55 °C.
- Use 60/75 °C copper wire only, except for control circuits.
- Secondary circuit shall supplied from an external isolating source.
- These products are intended for use in a pollution degree 2 environment.
- These products are intended for use in overvoltage category III.

Type	Branch circuit/short circuit protection with fuses in accordance with UL248	
	Standard installation	Motor group installation
	Nominal value (max.) [A]	Nominal value (max.) [A]
E94ARNE0134	45	70
E94ARNE0244	70	70

Original - French

Avertissement !

- ► Protection par disjoncteur :
  - – Convient aux circuits non susceptibles de délivrer plus de 100 000 ampères symétriques eff., maximum 480 V, avec protection par des fusibles de calibre CC, J, ou R.
  - – Convient aux installations de groupe moteur sur des circuits non susceptibles de délivrer plus de 100 000 ampères symétriques eff., maximum 480 V, avec protection par des fusibles de calibre CC, J, ou T.
  - – Utiliser les fusibles spécifiés comme indiqué dans le tableau.
  - – La protection statique intégrée n'offre pas la même protection qu'un disjoncteur. Une protection par disjoncteur externe doit être fournie, conformément au National Electrical Code / Canadian Electrical Code, et aux autres dispositions applicables au niveau local.
- ► Le déclenchement du dispositif de protection du circuit de dérivation peut être dû à une coupure qui résulte d'un courant de défaut. Pour limiter le risque d'incendie ou de choc électrique, examiner les pièces porteuses de courant et les autres éléments du contrôleur ; les remplacer s'ils sont endommagés. Le relais de surcharge doit être remplacé en cas de grillage de l'élément traversé par le courant.
- ► Température ambiante maximale : 45 °C
- ► Température ambiante maximale avec réduction de puissance : 55 °C
- ► Utiliser exclusivement des conducteurs en cuivre 60/75 °C, sauf pour les circuits de commande.
- ► Prévoir un circuit auxiliaire alimenté par une source de tension avec isolation galvanique.
- ► Ces produits sont destinés à un environnement caractérisé par le degré de pollution 2.
- ► Ces produits sont conçus pour une utilisation dans la catégorie de surtension III.

Type	Protection du circuit de dérivation / protection contre les courts-circuits par fusibles conformément à UL248	
	Installation standard	Installation au sein d'un groupe moteur
	Valeur nominale (max.) [A]	Valeur nominale (max.) [A]
E94ARNE0134	45	70
E94ARNE0244	70	70

6.6.3 Connection plan

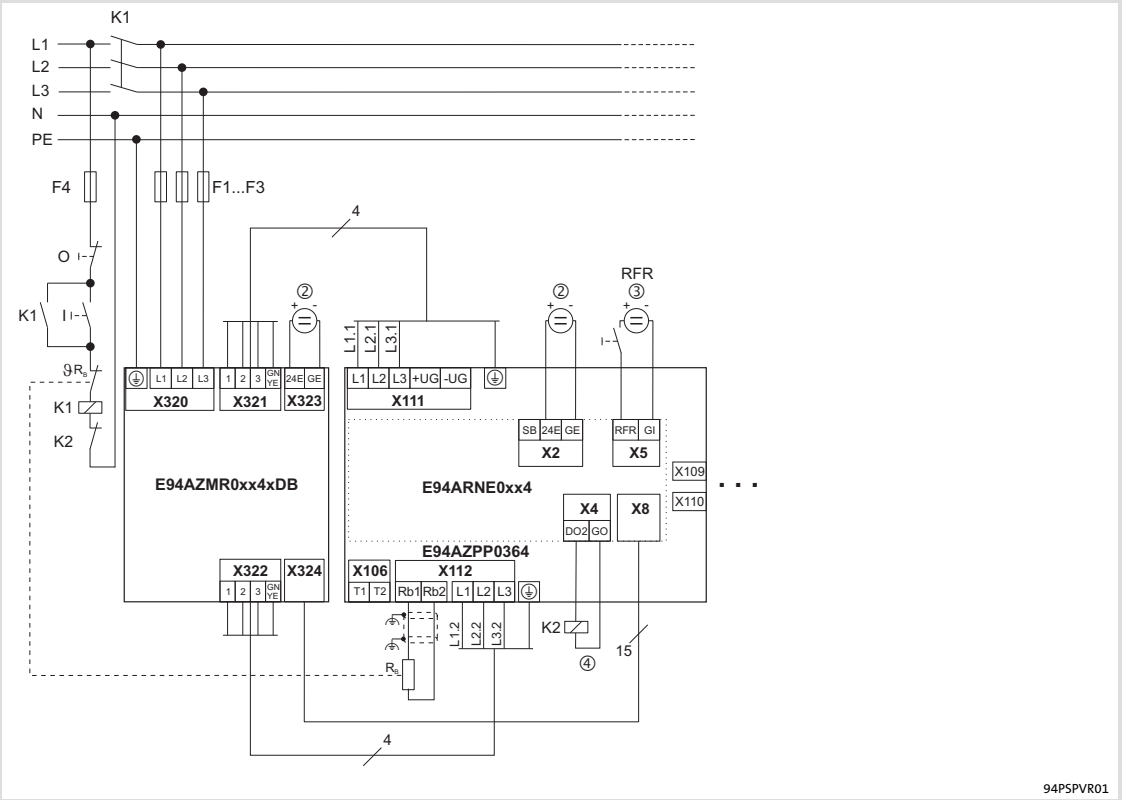

E94ARNE0xx4	Regenerative power supply module
E94AZPP0364	Installation backplane for the regenerative power supply module
E94AZMR0...	Mains filter
F1 ... F4	Fuses
RFR	Controller enable (only for regenerative feedback)
K1	Mains contactor
RB	Brake resistor (Mounting instructions brake resistor)
②	24 V voltage source for the control electronics (safely separated power supply unit (SELV/PELV) according to IEC 61131-2)
③	24 V voltage source for the digital inputs according to IEC 61131-2
④	From FW 02.00: Overtemperature disconnection DO2 load: max. 50 mA

6.6.4 Earthing of internal EMC filters

Device-internal EMC filters have been implemented to reduce interference emission. These EMC filters are connected to protective earth to discharge interference currents.

Under certain conditions the EMC filters must be disconnected from:

- Operation in an IT system

  The devices are protected from damages or destruction due to incompatible overvoltages in the case of an error (earth fault).

- DC-bus operation
- Operation with power supply modules or regenerative power supply modules
- Operating multiple devices with a common filter

  The EMC properties can only be reached by carrying out the described measures.

  The triggering behaviour of applicable earth-leakage circuit breakers remains undisturbed.

Overview of the measures

The measures which are to be carried out once have been prepared in relation to the devices and are each described together with installation and wiring.

Device (GG = device size)	Measure in the case of operation ...	
	in the IT system	in the interconnected system, with power supply modules or shared filters
Inverter		
with installation backplane (GG1 ... GG3)	Insert plastic cap elsewhere	
without installation backplane (GG6 ... GG7)	Change screwed connection	
without installation backplane (GG81 ... GG83)	Change screwed connection	
without installation backplane (GG91)	Only factory-set measures are possible. Please specify when ordering.	
Power supply modules		
with installation backplane (GG1 und GG3)	No measure necessary	
without installation backplane (GG4 ... GG5)	No measure necessary	
Regenerative power supply modules		
with installation backplane (GG3)	Insert plastic cap elsewhere	
associated mains filter	Change screwed connection	No measure necessary

Implementing the measures

Proceed as follows to disconnect the internal connection between the filters and PE:

1. Remove IT insulating cap from the parking position ① in the installation backplane.
   – For this apply a screwdriver on the right or left and lever off the insulating cap.
   – Optionally the insulating cap can be carefully removed using an appropriate pliers.
2. Attach IT insulating cap to the earthing jumper ② until it clicks into place.



Fig. 6-8 Plugging the IT insulating cap onto the earthing jumper

The measure for the mains filter of the power supply/regenerative feedback modules (only in the case of operation in the IT system)

Carry out the measure before installation and wiring.

How to proceed:

- ► Undo 8 fixing screws of the housing cover
- ► Remove housing cover
- ► Unscrew and remove IT screw with spring washer ①
- ► Screw in IT screw with spring washer at the parking position ②
- ► Fit housing cover
- ► Screw in and tighten 8 fixing screws of the housing cover

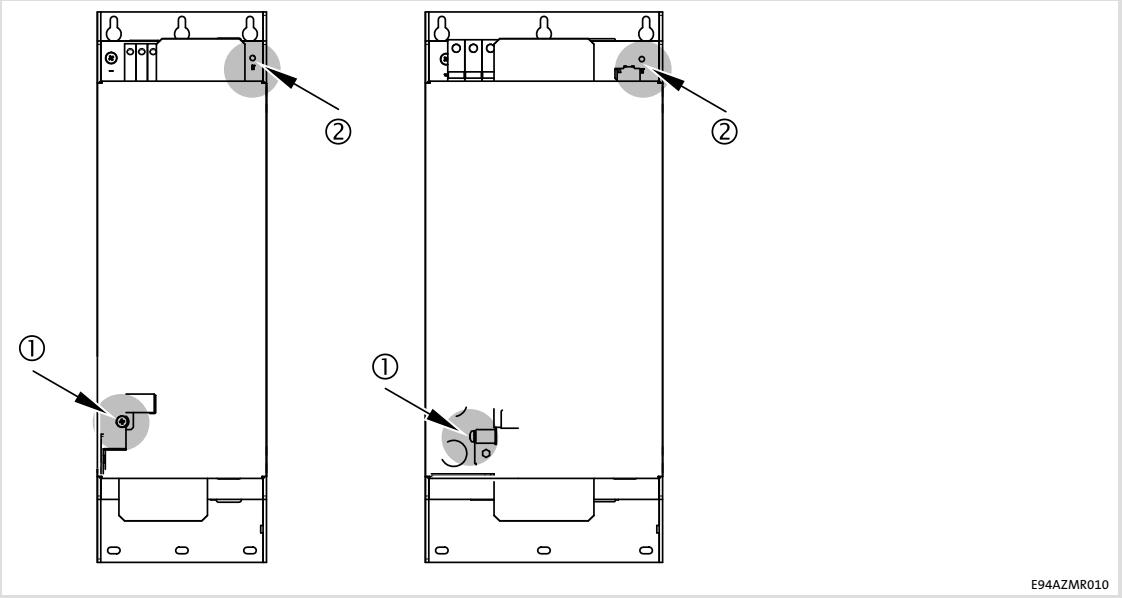

6.6.5 Connecting busbars

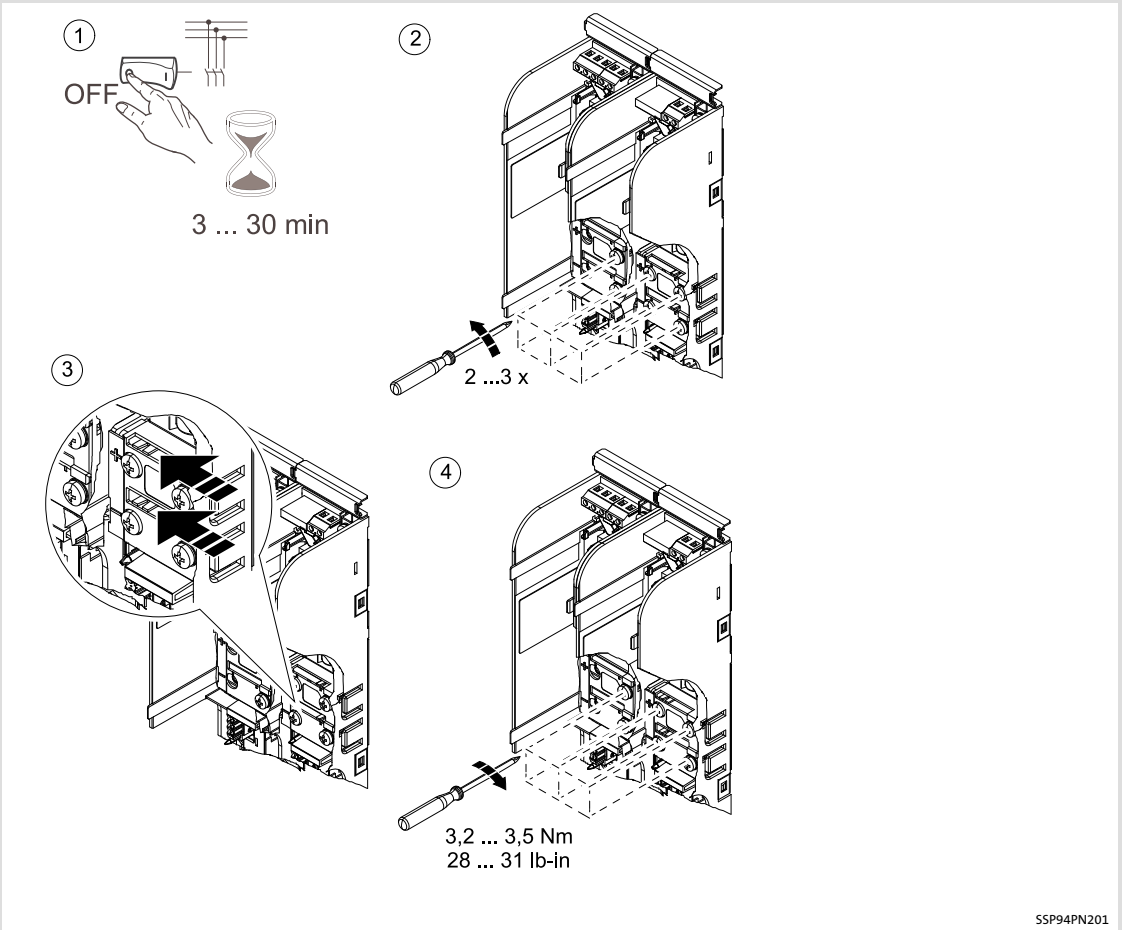

Fig. 6-9 Example: Connecting busbars

Proceed as follows to connect the busbars:

1. If devices of the interconnected system have already been in operation:
   – If necessary, switch off the supply system and wait until the discharge time has elapsed (depending on the device, this may take up to 30 minutes).
   – Make sure that all power terminals are deenergised.
2. Loosen the busbar screws (do not remove them completely).
3. Push the busbars as far as possible to the left towards the adjacent busbar.
   – Ensure that there is good contact to the adjacent busbar.
4. Tighten the busbar screws.
   – Tightening torque: 3.2 ... 3.5 Nm (28 ... 31 lb-in).
5. Screw the components onto the mounting plate, if necessary.
   – Tightening torque: 3.0 Nm (26 lb-in).

6.6.6 Design of the cables

- The cables used must comply with the approvals required for the location (e.g. UL).
- The cross-section of the PE conductor must be dimensioned according to the relevant national regulations.
- The effectiveness of a shielded cable is reached by:
  - Providing a good shield connection through large-surface shield contact.
  - Using only braided shields with low shield resistance made of tin-plated or nickel-plated copper braid.
  - Using braided shields with an overlap rate > 70 % and an overlap angle of 90 °.
  - Keeping unshielded cable ends as short as possible.

Use system cables or shielded cables for these connections:

- External brake resistor (Mounting Instructions of the brake resistor)
- Analog signals (inputs and outputs)
- CAN system bus
- Resolver
- System connection for synchronisation
- DC bus, cable length from 0.3 m

The following connections need not be shielded:

- Mains
- DC bus, cable length up to 0.3 m
- 24 V supply
- Digital signals (inputs and outputs)

6.6.7 How to connect the shield

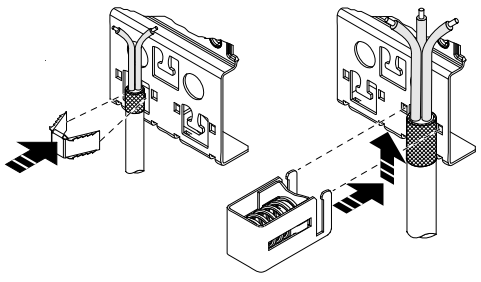

E94AZPS004

6.6.8 Terminal assignment



Tip!

Complete the wiring of the installation backplane before plugging in the standard device. The upper terminals of the installation backplane cannot be connected with a plugged-in standard device.

Mains

Terminal X320	Labelling	Description
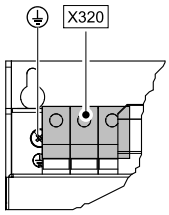 SSP94NF406	L1 L2 L3	Connection of the L1, L2, L3 mains phases
	⏚	Connection for the supply-side PE conductor with M5 ring cable lug

Terminal data					
	Max. conductor cross-section		Tightening torque		
	[mm²]	[AWG]	[Nm]	[lb-in]	
E94AZMR0264xDB	10	6	1.2 ... 1.5	10.6 ... 13.3	1.0 x 4.0
E94AZMR0474xDB	25	2	2.5	22.1	1.0 x 6.5

PE connection data				
	∅	Starting torque		
	[mm]	[Nm]	[lb-in]	
E94AZMR0264xDB	M5	3	26.5	PH2
E94AZMR0474xDB				

Terminal X111 (left part)	Labelling	Description
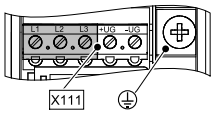 SSP940X111	L1 L2 L3	Connection of the mains phases E94APNE0xx4/E94AZxPxxx4: L1, L2, L3 E94ARNE0xx4/E94AZMR0xx4xDB: L1.1, L2.1, L3.1
	⏚	Terminal for the supply-side PE conductor with M5 ring cable lug

Terminal X112 (right part)	Labelling	Description
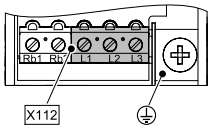 SSP940X112	L1 L2 L3	Connection of the mains phases E94APNE0xx4/E94AZxPxxx4: alternatively at the bottom L1, L2, L3 E94ARNE0xx4/E94AZMR0xx4xDB: L1.2, L2.2, L3.2
	⏚	Terminal for the supply-side PE conductor with M5 ring cable lug

Terminal data					
	Max. conductor cross-section		Tightening torque		
	[mm²]	[AWG]	[Nm]	[lb-in]	
Device size 3: Flexible With wire end ferrule	10	6	1.2 ... 1.5	10.6 ... 13.3	PH1

DC bus

Terminal X111 (right part)	Labelling	Description
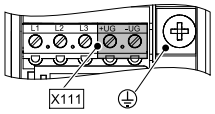 SSP940X111	+UG -UG	Alternative option for DC-bus voltage connection (compatible to 9300 series) E94ARNE0244: maximum current I_{dc} = 50 A

Terminal data					
	Max. conductor cross-section		Tightening torque		
	[mm²]	[AWG]	[Nm]	[lb-in]	
Device size 3: Flexible With wire end ferrule	10	6	1.2 ... 1.5	10.6 ... 13.3	PH1

External brake resistor

Terminal data					
	Max. conductor cross-section		Tightening torque		
	[mm²]	[AWG]	[Nm]	[lb-in]	
Device size 3: Flexible With wire end ferrule	10	6	1.2 ... 1.5	10.6 ... 13.3	PH1

6.6.9 Wiring of control connections



Danger!

Hazardous electrical voltage

All power connections carry a hazardous electrical voltage for a longer time after mains disconnection. Observe the information regarding the discharge time on the device.

Possible consequences:

► Death or severe injuries when touching the power terminals.

Protective measures:

► Before working on the power connections, wait at least until the discharge time has passed (depending on the device, this may be up to 30 minutes).

► Make sure that all power terminals are deenergised.



Stop!

The device contains components that can be destroyed by electrostatic discharge!

Before working on the device, the personnel must ensure that they are free of electrostatic charge by using appropriate measures.



Tip!

Parameter setting and configuration can be carried out using the L-force »Engineer«. For this purpose the Online Help and the Software Manual for the standard device will guide you.

System bus CAN on board

Terminal X1	Labelling	Description
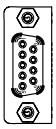 9400SSP000X1	Pin 2	CAN-LOW
	Pin 3	CAN-GND
	Pin 7	CAN-HIGH
	(Housing)	CAN-Shield

24 V supply

Terminal X323	Labelling	Description
 SSP9400X11	GE	GND external supply
	24E	24 V external supply through safely separated power supply unit (SELV/PELV) IEC 61131-2, 22.8 ... 28.8 V, residual ripple max. ±5 % Current during operation: 450 mA Starting current: max. 4 A for 100 ms

Terminal data				
	Conductor cross-section		Tightening torque	
	[mm²]	[AWG]	[Nm]	[lb-in]
Flexible	0.2 ... 2.5	24 ... 12	Spring terminal	
With wire end ferrule				

Stripping length / contact length: 10 mm

Terminal X2	Labelling	Description
 9400SSP000X2	GE	GND external supply
	24E	24 V external supply via a safely separated power supply unit (SELV/PELV)
	SB	State bus in/out (reference GE)

Terminal data				
	Conductor cross-section		Tightening torque	
	[mm²]	[AWG]	[Nm]	[lb-in]
Flexible	0.2 ... 2.5	24 ... 12	Spring terminal	
With wire end ferrule				

Analog inputs, analog outputs

Terminal X3	Labelling	Description
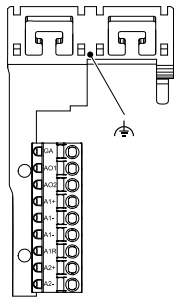 SSP94000X3	GA	GND analog signals
	AO1	Analog output 1
	AO2	Analog output 2
	A1+	Analog input 1 +
	A1-	Analog input 1 -
	A1-	Analog input 1 -
	A1R	Terminating resistor for ±20mA
	A2+	Analog input 2 +
	A2-	Analog input 2 -
	⏚	Shield connection: Fix the shield with EMC wire clamp.

Terminal data				
	Conductor cross-section		Tightening torque	
	[mm²]	[AWG]	[Nm]	[lb-in]
Flexible	0.2 ... 2.5	24 ... 12	Spring terminal	
With wire end ferrule				

Digital outputs

Terminal X4	Labelling	Description
	GO	GND digital out
	24O	24-V digital out
	DO1	Digital output 1
	DO2	Digital output 2
	DO3	Digital output 3
9400SSP000X4	DO4	Digital output 4

Terminal data				
	Conductor cross-section		Tightening torque	
	[mm²]	[AWG]	[Nm]	[lb-in]
Flexible	0.2 ... 2.5	24 ... 12	Spring terminal	
With wire end ferrule				

Digital inputs

Terminal X5	Labelling	Description
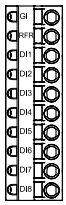	GI	GND digital in
	RFR	Controller enable
	DI1	Digital input 1
	DI2	Digital input 2
	DI3	Digital input 3
	DI4	Digital input 4
	DI5	Digital input 5
	DI6	Digital input 6
	DI7	Digital input 7
9400SSP000X5	DI8	Digital input 8

Terminal data				
	Conductor cross-section		Tightening torque	
	[mm²]	[AWG]	[Nm]	[lb-in]
Flexible	0.2 ... 2.5	24 ... 12	Spring terminal	
With wire end ferrule				

Diagnostics/keypad

Terminal X6	Labelling	Description
 9400SSP000X6		Internal interface, RJ69 socket, for keypad or diagnostic adapter

Resolver

(without function)

Terminal X7	Labelling	Description
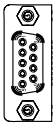	1	+REF
	2	-REF
	3	V_{CC}
	4	+COS
	5	-COS
	6	+SIN
	7	-SIN
	8	+KTY
9400SSP000X7	9	-KTY

System connection for synchronisation

X8terminal	Labelling	Description
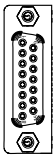	1	Must only be used in conjunctionwith the E94AZMR0xx4xDB mains filter, X324
	...	
9400SSP000X8	15	

6.7 Device modules

Depending on the device version or the application, the device is equipped with device modules. A nameplate attached to the side of the device serves to identify the already equipped device modules .

The possible modules are briefly described in the Accessories chapter. Detailed information can be found in the respective documentation.

6.8 Final works

6.8.1 Initial commissioning on 400 V mains voltage

After the installation has been carried out according to the Mounting Instructions, the regenerative power supply module can be operated on a mains voltage of 400 V.

The regenerative feedback is activated via the digital input RFR.

How to proceed:

1. Switch on 24 V supply voltages:
   – for the mains filter
   – for the regenerative power supply module (optional)
2. Switch on 400 V mains voltage.
3. Activate/deactivate regenerative feedback via the digital input RFR.

6.8.2 Initial commissioning on 230 V or 480 V mains voltage

For operation on a mains voltage of 230 V or 480 V, first the mains voltage within the regenerative power supply module has to be set. The setting is effected in C00173 and can be carried out using a keypad or the Lenze PC software »Engineer«.

For commissioning you require:

► An EZAEBKx00xkeypad,

or

► A computer with Windows® operating system (XP or 2000)
► The Lenze PC software »Engineer«
► A connection to the regenerative power supply module via an interface, e. g.
   – Diagnostic interface X6 with USB diagnostic adapter
   – CAN system bus
   – Communication modules in the expansion slots M1/M2
► The software manual for the technology application used
► The communication manual (KHB) for the network of the automation platform
► Switch on 24 V supply voltages:
   – for the mains filter
   – for the regenerative power supply module

After the setting has been carried out according to the mains voltage available:

1. Switch on mains voltage.
2. Activate/deactivate regenerative feedback via the digital input RFR.

6.8.3 Further settings

Follow the instructions of the software and/or read the documentation for the parameterisation of the regenerative power supply module.

7 DC-bus operation

7.1 Introduction



Tip!

The information regarding DC-bus operation is based on standard applications.

If you have any questions regarding other possible solutions for DC-bus operation, get in touch with your Lenze contact person.

7.1.1 Terminology and abbreviations used

Term	Description
DC bus	The energy store in the controller or supply module from which the controller modulates the AC voltage for the motor. The DC buses of several controllers can be networked.
DC bus	Electrical connection of the DC connections of several controllers via cable or busbar.
DC-voltage level	DC-voltage level in the DC bus
Power supply module	Module with AC mains connection used to supply the DC bus of a drive system with DC voltage.
Regenerative power supply module	Power supply module with additional power regeneration into the AC mains
Multi-axis controllers (Multi Drive)	Controllers for connection to a DC bus. Multi-axis controllers have no AC mains connection and no brake chopper.
Single-axis controllers (Single Drive)	Controllers for connection to an AC mains or a DC bus. Single-axis controllers have an integrated brake chopper.
Brake chopper	Switching element in the controller used to dissipate excess energy in the DC bus via a brake resistor.
Brake resistor	High-performance resistor used to convert excess energy in the DC-bus into heat.
Braking operation	Motor operation in generator mode with energy feedback from the motor to the controller.

7.1.2 Comparison single-axis controllers / multi-axis controllers

As controllers of the 9400 Servo Drives series, the ”Single Drive, E94x**S**…” are available in the power range up to 460 A (240 kW) and ”Multi Drive, E94x**M**…” are available up to 59 A (30 kW).

The single-axis controllers (”Single Drive”) are designed for connection to AC mains (3/PE AC). They are equipped with mains rectifiers, mains filters and brake choppers.

The multi-axis controllers (”Multi Drive”) are exclusively designed for connection to DC mains (2/PE DC). They are equipped with DC busbars for easy assembly. In DC-bus connections, power supply modules are used that contain mains rectifiers and brake choppers. Mains filters must be specially dimensioned for each DC-bus.

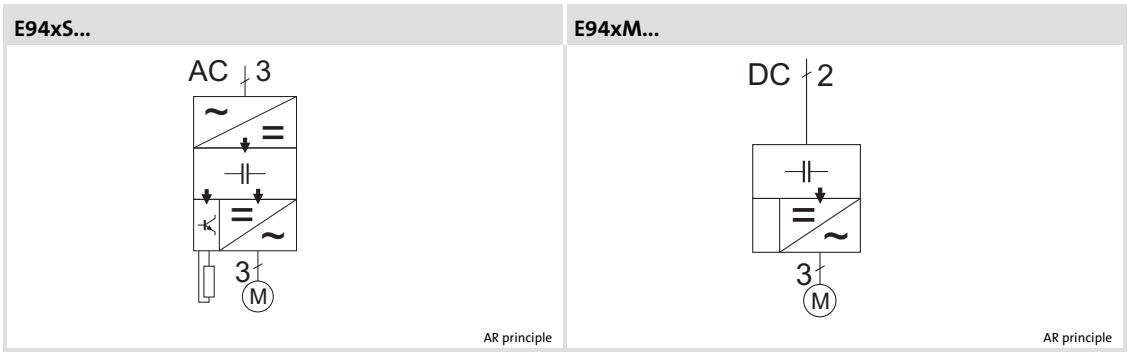

Fig. 7-1 Single Drive/Multi Drive

7.1.3 Advantages of a drive system

When several controllers are operated in a DC-bus connection (DC bus), this offers the following advantages:

- Energy exchange between controllers in generator-mode (braking) and motor-mode operation.
- The energy exchange reduces the supply power from the AC mains.
- DC-supply modules or feeding single-axis controllers can be dimensioned with a lower rated power.
- The energy exchange reduces the braking losses in generator-mode operation.

Advantages for installation:

- Only one AC-mains connection (e.g. at the DC-supply module).
- Reduced wiring costs.

7.1.4 General information on the accessories

Fuses in the DC bus

For device protection, multi-axis controllers up to 11 kW are equipped with a fuse in the installation backplane. The fuse is only integrated into the current path if the busbar system (X109) is used.

When operated in a DC-bus connection, single-axis controllers can be retrofit with a fuse in the installation backplane for device protection (see busbar mounting set).

When the alternative terminal connections are used for DC-bus wiring, external fuses must be integrated into both current paths (+UG/-UG).

Busbar mounting set

With the busbar mounting set (E94AZJA0xx) you can connect a single-axis controller via a busbar to a DC bus, e.g. to provide additional brake power. The busbar mounting set also includes the corresponding fuse.

DC-feeding point

With the DC-input module (E94AZEX100) you can establish the electrical connection between the DC cables and the busbar. Multi-row or distributed arrangements are possible.

Filters

RFI filters and mains filters are available for the devices connected to the AC mains (supply modules or single-axis controllers).

Depending on the application, additional filters may be required for compliance with the EMC regulations. When dimensioning the filters, please consider:

- Motor cable lengths
- Number of axis controllers
- Motor powers

7.2 Conditions for trouble-free DC-bus operation

7.2.1 Voltages

The DC-bus operation of controllers is only possible if the rated values of the mains voltage or DC-bus voltage are identical. The switching thresholds of all brake choppers in the interconnected system have to be set identically and the control has to be synchronised by master/slave interconnection.

7.2.2 Number of feeding points

The 9400 servo drives series has been designed for drive systems with a central AC mains feeding point. For this you can use DC supply modules of different power categories.

Several AC mains feeding points are permissible in the interconnected system of two single-axis drive controllers with the same power rating.

7.2.3 Other conditions

- The entire DC power P_{DC} must be provided by the feeding point (DC-supply module or "Single Drive" controller).
- The controllers in the DC bus may only start operation when the DC bus has been completely loaded. I.e. controller enable may only be set after "State bus OK" (see terminal X2).
- Up to a total current of 100 A, devices up to 24 A (device sizes 1 ... 3) can be operated via the integrated DC busbar. Maximum busbar overload for 60 s: 150 % * I_r, followed by a relief phase of 120 s: 75 % * I_r.
- The DC bus must at no time be overloaded through the required maximum total power. For this, a time/performance diagram has to be created and considered (see Basic dimensioning).
- The cable protection measures described for the DC-bus operation must be observed.

7.3 DC-bus variants

7.3.1 Supply from a supply module

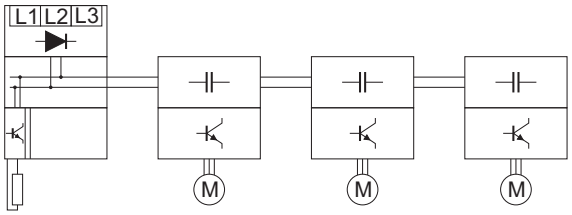

A DC supply module with direct AC mains connection supplies energy into the DC bus of several controllers. The DC supply module is equipped with an integrated brake chopper to which you can connect a brake resistor.

Possible combinations	
Components to be used	**Components not to be used**
For supply	
Power supply modules	
E94APNExxx4 (10 ... 245 A)	-
Regenerative power supply modules	
E94ARNE0xx4 + E94AZMR0xx4xDB (13 ... 24 A)	-
As DC-bus component	
Multi-axis controllers	
E94xMxExxx4 (2 ... 59 A)	-
Single-axis controllers	
E94xSxE0024 ... E94xSxE0594 (2 ... 59 A or device sizes 1 ... 6)	E94xSxE0864 ... E94xSxE4604 (86 ... 460 A or device size 7 ... 91)

7.3.2 Supply from controllers

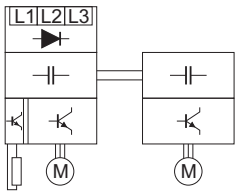

A single-axis controller with direct AC mains connection supplies energy into the DC bus of other controllers. The single-axis controller is equipped with an integrated brake chopper to which you can connect a brake resistor.

Possible combinations	
Components to be used	**Components not to be used**
For supply	
Single-axis controllers	
E94xSxE0024 ... E94xSxE0594 (2 ... 59 A or device sizes 1 ... 6)	E94xSxE0864 ... E94xSxE4604 (86 ... 460 A or device size 7 ... 91) → Possible to a certain degree when considering Application Reports.
As DC-bus component	
Multi-axis controllers	
E94xMxExxx4 (2 ... 59 A)	-
Single-axis controllers	
E94xSxE0024 ... E94xSxE0594 (2 ... 59 A or device sizes 1 ... 6)	E94xSxE0864 ... E94xSxE4604 (86 ... 460 A or device size 7 ... 91)

7.4 Rated data

7.4.1 General data

The total current of the nominal input currents I_{DC} to be provided by the power supply module or one or several single-axis controllers must be determined. The DC cables must be dimensioned in accordance with the total current.

The number of devices in a drive system can be limited by the DC-bus capacity and the charging current ($I_{charging,\ permissible} > \Sigma(I_{charging\ at}\ U_r)$).

Additional data						
	Input current	DC-bus capacity	Charging resistor	$I_{charging}$ at V_{Lr}		permissible
Type	I_{DC} at I_{ar} [A]	[µF]	[Ω]	400 V [A]	480 V [A]	[A]
Power supply modules						
E94APNE0104	-	-	-	-	-	90
E94APNE0364	-	-	-	-	-	154
E94APNE1004	-	-	-	-	-	278
E94APNE2454	-	-	-	-	-	520
Regenerative power supply modules						
E94ARNE0134	20.6	495	100	5.7	7.1	154
E94ARNE0244	35.5	990	50	11.3	14.1	154
Multi Drives						
E94xMxE0024	2.6	165	100	5.7	7.1	-
E94xMxE0034	4.3	165	100	5.7	7.1	-
E94xMxE0044	6.7	330	100	5.7	7.1	-
E94xMxE0074	12.1	330	100	5.7	7.1	-
E94xMxE0094	15.4	495	50	11.3	14.1	-
E94xMxE0134	20.6	495	100	5.7	7.1	-
E94xMxE0174	25.7	825	50	11.3	14.1	-
E94xMxE0244	35.5	990	50	11.3	14.1	-
E94xMxE0324	48.0	1320	50	11.3	14.1	-
E94xMxE0474	52.6	2200	27	21.0	25.1	154
E94xMxE0594	66.1	2200	27	21.0	25.1	154

Additional data						
	Input current	DC-bus capacity	Charging resistor	$I_{charging}$ at V_{Lr}		permissible
Type	I_{DC} at I_{ar} [A]	[µF]	[Ω]	400 V [A]	480 V [A]	[A]
Single Drives						
E94xSxE0024	2.6	165	100	5.7	6.8	20.4
E94xSxE0034	4.3	165	100	5.7	6.8	20.4
E94xSxE0044	6.7	330	100	5.7	6.8	49.0
E94xSxE0074	12.1	330	100	5.7	6.8	49.0
E94xSxE0134	20.6	495	100	5.7	6.8	154
E94xSxE0174	25.7	825	50	11.3	13,6	154
E94xSxE0244	35.5	990	50	11.3	13,6	154
E94xSxE0324	35.5	2200	27	21.0	25.1	154
E94xSxE0474	52.6	2200	27	21.0	25.1	154
E94xSxE0594	66.1	2200	27	21.0	25.1	154

Tab. 7-1

DCbus = DC bus

$I_{charging}$ = charging current

The devices listed below are not permissible as direct DC-connection nodes on the DC link level. Get in touch with your Lenze contact person to find out whether solutions and measures have been worked out for your particular application.

Additional data						
	Input current	DC-bus capacity	Charging resistor	$I_{charging}$ at V_{Lr}		permissible
Type	I_{DC} at I_{ar} [A]	[µF]	[Ω]	400 V [A]	480 V [A]	[A]
E94xSxE0864	96.8	3300	68	8.3	10.0	358
E94xSxE1044	116	3300	68	8.3	10.0	358
E94BSxE1454	171	6000	- [1)]	5.0	5.0	356
E94BSxE1724	203	8000	- [1)]	6.7	6.7	423
E94BSxE2024	239	8000	- [1)]	6.7	6.7	496
E94BSxE2454	290	8000	- [1)]	6.7	6.7	603
E94BSxE2924	343	8000	- [1)]	6.7	6.7	713
E94BSxE3664	434	16000	- [1)]	13.4	13.4	901
E94BSxE4604	544	16000	- [1)]	13.4	13.4	1130

Tab. 7-2

DCbus = DC bus

$I_{charging}$ = charging current

1) Charge with constant current

7.4.2 DC-supply power

The parameters relevant for the selection of a supply unit with a suitable supply power (even in the overload range) are listed in the below table:

U_{Lr}	Rated AC voltage
Cycle 1	Cycle for the second-range
Cycle 2	Cycle for the minute-range
$P_{DC\ 100\%}$	Permanent power of DC-voltage level
P_{ol}	Power supply during overload time
t_{ol}	Overload time
P_{re}	Power supply during unloading time
t_{re}	Relief time

Any other cycles are calculated with the following formula:

$$\frac{(P_{ol} \cdot t_{ol}) + (P_{re} \cdot t_{re})}{t_{ol} + t_{re}} \leq P_{DC\ 100\%}$$

Cycles other than the above cycles must not exceed the specified power and time values, i.e. the values must be used as maximum values.

The values depend on the rated AC voltage V_{Lr}.

230 V

Supply power V_{Lr} = 230 V		Cycle 1		Cycle 2	
Type	$P_{DC\ 100\%}$ [kW]	$P_{ol} \cdot t_{ol}$ [kW] · [s]	$P_{re} \cdot t_{re}$ [kW] · [s]	$P_{ol} \cdot t_{ol}$ [kW] · [s]	$P_{re} \cdot t_{re}$ [kW] · [s]
Supply modules (+ filter)					
E94APNE0104	2.1	8.4 · 0.5	1.6 · 4.5	3.2 · 60	1.6 · 120
E94APNE0104 + E94AZMP0084	2.8	11.2 · 0.5	2.1 · 4.5	4.2 · 60	2.1 · 120
E94APNE0364	7.5	22.5 · 0.5	5.6 · 4.5	11.3 · 60	5.6 · 120
E94APNE0364 + E94AZMP0294	10.1	30.3 · 0.5	7.6 · 4.5	15.5 · 60	7.6 · 120
E94APNE1004	20.8	41.6 · 0.5	18.5 · 4.5	31.2 · 60	15.6 · 120
E94APNE1004 + E94AZMP0824	27.9	55.8 · 0.5	24.8 · 4.5	41.9 · 60	20.9 · 120
E94APNE2454	51	76.5 · 0.5	48.2 · 4.5	76.5 · 60	38.3 · 120
E94APNE2454 + E94AZMP2004	68.5	103 · 0.5	64.7 · 4.5	103 · 60	51.3 · 120
Regenerative power supply modules + filters					
E94ARNE0134 + E94AZMR0264xDB	8.6	25.8 · 0.5	6.5 · 4.5	12.9 · 60	6.5 · 120
E94ARNE0244 + E94AZMR0474xDB	15.6	46.6 · 0.5	11.7 · 4.5	23.3 · 60	11.7 · 120
Single Drives					
E94xSxE0024	1.0	4.0 · 0.5	0.8 · 4.5	1.8 · 60	0.8 · 120
E94xSxE0034	1.0	4.0 · 0.5	0.8 · 4.5	1.8 · 60	0.8 · 120
E94xSxE0044	1.6	6.4 · 0.5	1.2 · 4.5	3.0 · 60	1.2 · 120
E94xSxE0074	2.7	10.8 · 0.5	2.0 · 4.5	4.1 · 60	2.0 · 120
E94xSxE0134	5.0	20.0 · 0.5	3.8 · 4.5	9.5 · 60	3.8 · 120
E94xSxE0174	6.3	25.2 · 0.5	4.7 · 4.5	9.5 · 60	4.7 · 120
E94xSxE0244	8.9	35.6 · 0.5	6.7 · 4.5	13.4 · 60	6.7 · 120
E94xSxE0324	15.8	63.2 · 0.5	11.9 · 4.5	23.7 · 60	11.9 · 120
E94xSxE0474	22.3	80.4 · 0.5	15.1 · 4.5	30.2 · 60	15.1 · 120
E94xSxE0594	22.3	80.4 · 0.5	15.1 · 4.5	30.2 · 60	15.1 · 120
E94xSxE0864	39.1	70.4 · 0.5	29.3 · 4.5	58.7 · 60	29.3 · 120
E94xSxE1044	39.1	70.4 · 0.5	29.3 · 4.5	58.7 · 60	29.3 · 120

Tab. 7-3

400 V

Power supply V_{Lr} = 400 V		Cycle 1		Cycle 2	
Type	$P_{DC\ 100\%}$ [kW]	$P_{ol} \cdot t_{ol}$ [kW] · [s]	$P_{re} \cdot t_{re}$ [kW] · [s]	$P_{ol} \cdot t_{ol}$ [kW] · [s]	$P_{re} \cdot t_{re}$ [kW] · [s]
Supply modules (+ filter)					
E94APNE0104	3.6	14.4 · 0.5	2.7 · 4.5	5.4 · 60	2.7 · 120
E94APNE0104 + E94AZMP0084	4.9	19.6 · 0.5	3.7 · 4.5	7.4 · 60	3.7 · 120
E94APNE0364	13.0	39.0 · 0.5	9.8 · 4.5	19.5 · 60	9.8 · 120
E94APNE0364 + E94AZMP0294	17.5	52.5 · 0.5	13.1 · 4.5	26.3 · 60	13.1 · 120
E94APNE1004	36.2	72.4 · 0.5	32.2 · 4.5	54.3 · 60	27.2 · 120
E94APNE1004 + E94AZMP0824	48.6	97.2 · 0.5	43.2 · 4.5	72.9 · 60	36.5 · 120
E94APNE2454	88.6	133 · 0.5	83.7 · 4.5	133 · 60	66.4 · 120
E94APNE2454 + E94AZMP2004	119	179 · 0.5	112 · 4.5	179 · 60	89.0 · 120
Regenerative power supply modules + filters					
E94ARNE0134 + E94AZMR0264xDB	15.0	44.9 · 0.5	11.3· 4.5	22.4 · 60	11.3 · 120
E94ARNE0244 + E94AZMR0474xDB	27.0	81.1 · 0.5	20.3· 4.5	40.5 · 60	20.3 · 120
Single Drives					
E94xSxE0024	2.0	8.0 · 0.5	1.3 · 4.5	3.0 · 60	1.5 · 120
E94xSxE0034	2.0	8.0 · 0.5	1.3 · 4.5	3.0 · 60	1.5 · 120
E94xSxE0044	3.2	12.8 · 0.5	2.1 · 4.5	4.8 · 60	2.4 · 120
E94xSxE0074	5.7	17.1 · 0.5	4.4 · 4.5	8.6 · 60	4.3 · 120
E94xSxE0134	10.5	31.5 · 0.5	8.2 · 4.5	15.8 · 60	7.9 · 120
E94xSxE0174	13.1	39.3 · 0.5	10.2 · 4.5	19.7 · 60	9.8 · 120
E94xSxE0244	18.7	46.8 · 0.5	15.6 · 4.5	28.1 · 60	14.0 · 120
E94xSxE0324	26.7	64.0 · 0.5	22.6 · 4.5	40.0 · 60	20.0 · 120
E94xSxE0474	37.9	75.8 · 0.5	33.7 · 4.5	57.0 · 60	28.4 · 120
E94xSxE0594	37.9	75.8 · 0.5	33.7 · 4.5	57.0 · 60	28.4 · 120
E94xSxE0864	66.6	133 · 0.5	59.2 · 4.5	100 · 60	50.0 · 120
E94xSxE1044	66.6	133 · 0.5	59.2 · 4.5	100 · 60	50.0 · 120
E94BSxE1454	92.0	166 · 10	69.0 · 30	138 · 60	69.0 · 120
E94BSxE1724	109	196 · 10	82.0 · 30	164 · 60	82.0 · 120
E94BSxE2024	129	232 · 10	97.0 · 30	194 · 60	97.0 · 120
E94BSxE2454	156	280 · 10	117 · 30	234 · 60	117 · 120
E94BSxE2924	186	334 · 10	139 · 30	279 · 60	139 · 120
E94BSxE3664	233	419 · 10	175 · 30	350 · 60	175 · 120
E94BSxE4604	293	527 · 10	220 · 30	440 · 60	220 · 120

Tab. 7-4

480 V

Power supply V_{Lr} = 480 V		Cycle 1		Cycle 2	
Type	$P_{DC\ 100\%}$ [kW]	$P_{ol} \cdot t_{ol}$ [kW] · [s]	$P_{re} \cdot t_{re}$ [kW] · [s]	$P_{ol} \cdot t_{ol}$ [kW] · [s]	$P_{re} \cdot t_{re}$ [kW] · [s]
Supply modules (+ filter)					
E94APNE0104	4.5	18.0 · 0.5	3.4 · 4.5	6.8 · 60	3.4 · 120
E94APNE0104 + E94AZMP0084	6.1	24.4 · 0.5	4.6 · 4.5	9.2 · 60	4.6 · 120
E94APNE0364	16.3	48.9 · 0.5	12.2 · 4.5	24.5 · 60	12.2 · 120
E94APNE0364 + E94AZMP0294	21.9	65.7 · 0.5	16.4 · 4.5	32.9 · 60	16.4 · 120
E94APNE1004	45.2	90.4 · 0.5	40.2 · 4.5	67.8 · 60	33.9 · 120
E94APNE1004 + E94AZMP0824	60.8	122 · 0.5	54.0 · 4.5	91.2 · 60	45.6 · 120
E94APNE2454	111	167 · 0.5	105 · 4.5	167 · 60	83.0 · 120
E94APNE2454 + E94AZMP2004	149	224 · 0.5	141 · 4.5	224 · 60	112 · 120
Regenerative power supply modules + filters					
E94ARNE0134 + E94AZMR0264xDB	18.6	56.1 · 0.5	14.0 · 4.5	28.0 · 60	14.0 · 120
E94ARNE0244 + E94AZMR0474xDB	33.8	101.4 · 0.5	25.4 · 4.5	50.7 · 60	25.4 · 120
Single Drive					
E94xSxE0024	2.4	9.6 · 0.5	1.6 · 4.5	3.6 · 60	1.8 · 120
E94xSxE0034	2.4	9.6 · 0.5	1.6 · 4.5	3.6· 60	1.8 · 120
E94xSxE0044	3.8	15.2 · 0.5	2.5 · 4.5	5.7 · 60	2.9 · 120
E94xSxE0074	6.8	20.4 · 0.5	5.3 · 4.5	10.2 · 60	5.1 · 120
E94xSxE0134	12.5	37.5 · 0.5	9.7 · 4.5	18.8 · 60	9.4 · 120
E94xSxE0174	15.7	47.1 · 0.5	12.2 · 4.5	23.6 · 60	11.8 · 120
E94xSxE0244	22.5	56.3 · 0.5	18.7 · 4.5	33.8 · 60	16.9 · 120
E94xSxE0324	28.0	67.0 · 0.5	23.7 · 4.5	42.0 · 60	21.0 · 120
E94xSxE0474	45.2	108 · 0.5	38.2 · 4.5	67.8 · 60	33.9 · 120
E94xSxE0594	45.2	108 · 0.5	38.2 · 4.5	67.8 · 60	33.9 · 120
E94xSxE0864	79.6	159 · 0.5	70.8 · 4.5	119 · 60	59.7 · 120
E94xSxE1044	79.6	159 · 0.5	70.8 · 4.5	119 · 60	59.7 · 120
E94BSxE1454	92.0	166 · 10	69.0 · 30	138 · 60	69.0 · 120
E94BSxE1724	109	196 · 10	82.0 · 30	164 · 60	82.0 · 120
E94BSxE2024	129	232 · 10	97.0 · 30	194 · 60	97.0 · 120
E94BSxE2454	156	280 · 10	117 · 30	234 · 60	117 · 120
E94BSxE2924	186	334 · 10	139 · 30	279 · 60	139 · 120
E94BSxE3664	233	419 · 10	175 · 30	350 · 60	175 · 120
E94BSxE4604	293	527 · 10	220 · 30	440 · 60	220 · 120

Tab. 7-5

7.4.3 DC-power requirements

Use the below tables to determine the power requirements of the devices used in the DC bus and the device-dependent power loss for the rated mains voltage U_{Lr}.

Use the below tables to determine the power requirements of the devices used in the DC bus and the device-dependent power loss for the rated mains voltage U_{Lr}.

Power requirements P_{ar} [W] with rated current			
Type	U_{Lr} = 230 V	U_{Lr} = 400 V	U_{LN} = 480 V
Multi Drives			
E94xMxE0024	500	900	1000
E94xMxE0034	900	1600	1600
E94xMxE0044	1400	2500	2600
E94xMxE0074	2500	4400	4600
E94xMxE0094	3300	5800	6100
E94xMxE0134	4700	8100	8500
E94xMxE0174	5900	10300	10800
E94xMxE0244	8400	14700	15400
E94xMxE0324	11500	20000	19400
E94xMxE0474	16900	29300	30800
E94xMxE0594	19000	33100	38600
Single Drives			
E94xSxE0024	500	900	1000
E94xSxE0034	900	1600	1600
E94xSxE0044	1400	2500	2600
E94xSxE0074	2500	4400	4600
E94xSxE0134	4700	8100	8500
E94xSxE0174	5900	10300	10800
E94xSxE0244	8400	14700	15400
E94xSxE0324	11500	20000	21000
E94xSxE0474	16900	29300	30800
E94xSxE0594	19000	33100	38600
E94xSxE0864	30800	53600	56300
E94xSxE1044	37300	64800	68100
E94BSxE1454	-	90000	100000
E94BSxE1724	-	107000	129000
E94BSxE2024	-	126000	151000
E94BSxE2454	-	153000	183000
E94BSxE2924	-	182000	218000
E94BSxE3664	-	228000	274000
E94BSxE4604	-	287000	344000

Tab. 7-6

Type	Power loss P_V [W] at a switching frequency of 4 kHz			
	U_{Lr} = 230 V	U_{Lr} = 400 V	U_{LN} = 480 V	when controller is inhibited
Multi Drives				
E94xMxE0024	65	80	95	40
E94xMxE0034	75	95	110	
E94xMxE0044	90	120	135	
E94xMxE0074	105	145	165	
E94xMxE0094	130	170	200	
E94xMxE0134	160	215	245	
E94xMxE0174	185	255	290	
E94xMxE0244	235	320	375	
E94xMxE0324	290	405	470	
Single Drives				
E94xSxE0024	70	90	100	40
E94xSxE0034	85	105	120	
E94xSxE0044	100	130	145	
E94xSxE0074	125	160	180	
E94xSxE0134	200	260	290	
E94xSxE0174	240	300	340	
E94xSxE0244	310	400	450	
E94xSxE0324	750	750	750	75
E94xSxE0474	1050	1050	1050	
E94xSxE0594	1100	1100	1100	
E94xSxE0864	1500	1500	1500	100
E94xSxE1044	1800	1800	1800	
E94BSxE1454	-	2100	2100	< 100
E94BSxE1724	-	2200	2200	< 100
E94BSxE2024	-	2600	2600	
E94BSxE2454	-	3300	3300	
E94BSxE2924	-	4100	4100	< 100
E94BSxE3664	-	4900	4900	< 100
E94BSxE4604	-	6200	6200	< 150

7.4.4 DC fuses

Note!

The fuse current given in the following is the maximum permissible value. This prevents fire and electrical hazard in the event of an error of the device.

The fuse must be smaller or equal to the maximum permissible value, taking the following into consideration:

- ► The maximum possible cable cross-section
- ► the laying system (e.g. tap installation)
- ► the ambient temperature
- ► the relevant regulations (e.g. UL508A, NEC70 and others).

Assignment of devices - DC-fuses

	+UG/-UG (X100)		Busbar (X109/X110)	
	Nominal value (max.)	Type	Nominal value (max.)	Type
Type	[A]		[A]	
E94xSxE0024 E94xSxE0034	16	Siba 5020106.16 Siba 5020206.16	315	Eaton 170M1761 Eaton 170M1741
	63	Eaton 170M1754 Eaton 170M1734		
E94xSxE0044 E94xSxE0074	40	Siba 5020106.40 Siba 5020206.40		
	125	Eaton 170M1757 Eaton 170M1737		
E94xSxE0134 E94xSxE0174 E94xSxE0244	100	Siba 2029220.100 Siba 2029221.100		
	200	Eaton 170M1759 Eaton 170M1739		
E94xMxE0024 E94xMxE0034 E94xMxE0044	16	Siba 5020106.16 Siba 5020206.16	315	Eaton 170M1761 Eaton 170M1741
	63	Eaton 170M1754 Eaton 170M1734		
E94xMxE0074 E94xMxE0094	40	Siba 5020106.40 Siba 5020206.40		
	125	Eaton 170M1757 Eaton 170M1737		
E94xMxE0134 E94xMxE0174 E94xMxE0244 E94xMxE0324	100	Siba 2029220.100 Siba 2029221.100		
	200	Eaton 170M1759 Eaton 170M1739		
E94xMxE0474 E94xMxE0594	315	170M1761 170M1741	-	-

Recommended fuse holder for type 170M...: Eaton (Bussmann) 170H1007

7.5 Basic dimensioning

7.5.1 General information

The Drive Solution Designer (DSD) PC software helps you to dimension your drive network.

For expert advice, you may also contact your Lenze sales representative when dimensioning your application.

Time/performance diagram

For determining the performance of your drive network, create a time/performance diagram for all axes for a complete machine cycle. The power requirements of the drive network are calculated by adding the individual performances occurring at the same time. Positive results show the AC requirements for the dimensioning of the power supply units. Negative results show the brake power to be dissipated via brake choppers at the brake resistor.

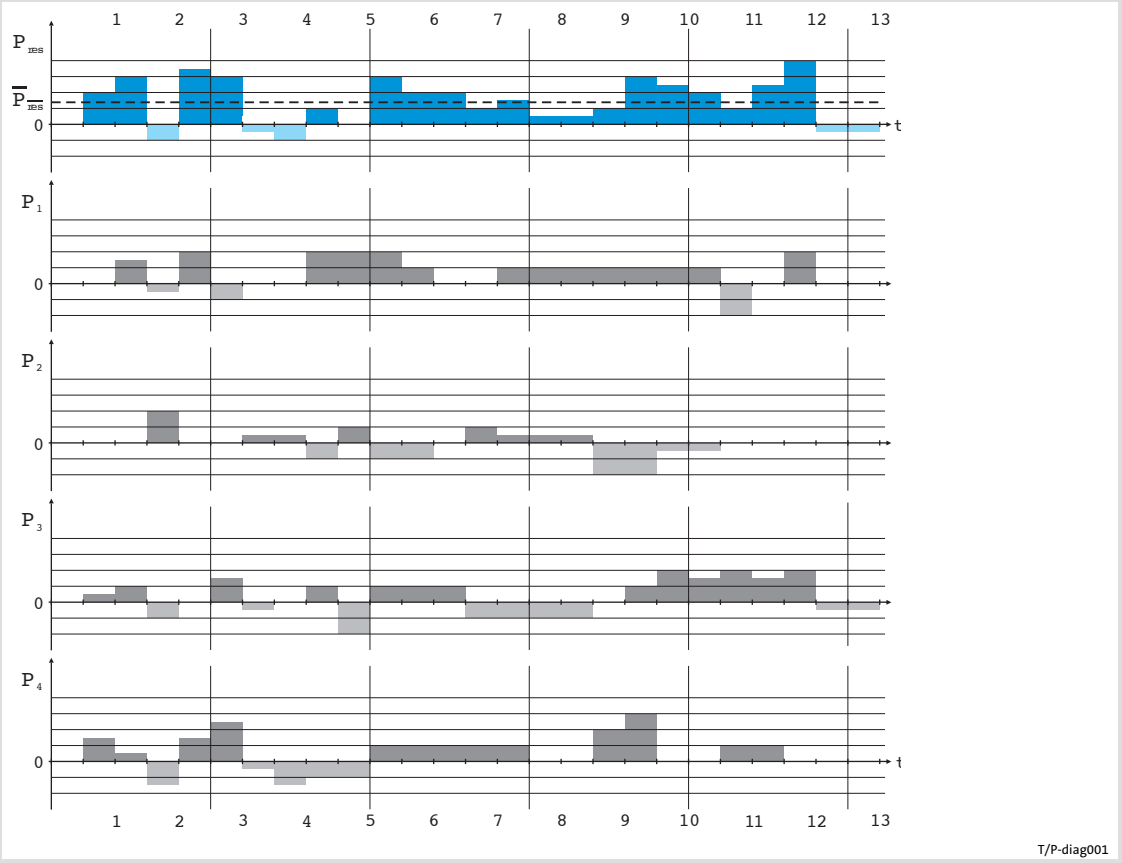

Tab. 7-7 Example time/performance diagram

$P_1 \ldots P_4$	Individual performances of axes 1 ... 4
P_{total}	Addition of the individual performances
$\overline{P}_{total}$	Average of the individual performances

Use the time/performance diagram to optimise the DC-bus performance of all axes for a complete machine cycle.

Utilisation factor

Please consider the utilisation factors when determining $P_{DCtotal}$. Reduce the power requirements if the rated power is not fully used.

Simultaneity factor

Please consider the simultaneity factor when determining $P_{DCtotal}$. Reduce the power requirements if the drives do not run simultaneously or in opposite direction (braking).

Braking

After determining the brake power $P_{BRtotal}$, ensure that the brake power can be provided by the brake choppers and brake resistors in the DC bus.

Other conditions

The power supply unit must be able to provide the required power (arithmetic mean).

The overload requirements must be within the permissible range:

(📖 7.4.2)

- ► 3-min cycle (1 min overload with 150 %/2 min recovery time with 75 %)
- ► 5-s cycle (0.5 s overload and 4.5 s recovery time with 75 %)

For detailed information on the overload capacity, please see the Technical data.

7.5.2 Power distribution of controllers

In a DC-bus operation, the power from the AC mains is stored in the DC bus and consumed by several controllers. Drive groups with non-synchronous power consumption, partial load or excess energy from braking operations are suitable for establishing a DC-bus connection.

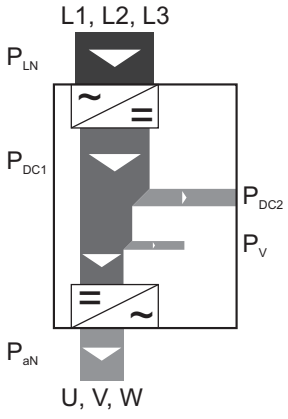

Power distribution

L1, L2, L3	Mains connection (3/PE AC)
P_{Lr}	Input mains power
P_{DC1}	Total DC-bus power
P_{DC2}	DC-bus power available for the DC bus
P_{loss}	Power loss
P_{ar}	Output power
U, V, W	Motor connection

7.5.3 Motor efficiency

For determining the power requirements, you have to consider the shaft power P_{shaft} and the motor efficiency. The motor efficiency can be found under the motor data.

7.5.4 Power loss of devices

When determining the power requirements, the power loss of the devices must be considered (📖 Tab. 7-6).

7.5.5 Determining the power requirements

For determining the power requirements of the drive system you need to know the rated power of the motors and their efficiency as well as the power losses of the controllers. The power requirements are calculated with the following formula:

$$P_{DCges} = \sum_{i=1}^{n} \left\{ \frac{(P_{Welle})_i}{\eta_i} + (P_{Verl})_i \right\}$$

$P_{DCtotal}$	Total power required by the drive system
P_{shaft}	Rated power of a connected motor
P_{loss}	Power loss of a controller
η	Motor efficiency
I	Index variable for device identification
n	Number of devices in the drive system

The supplying device must be able to supply the calculated power requirements.

For application examples, please see 7.7 .

7.5.6 Determining the regenerative power requirements

With the regenerative power supply modules of the ”Servo Drives 9400” series, power regeneration into the AC mains is possible. Use the determined regenerative power for the dimensioning of the regenerative power supply module.

7.5.7 Cable protection

In case of interferences, the cables have to be adequately protected (7.4.4).

Please consider the following when dimensioning the DC bus for a plant or machine:

- Mains fuses can be used to protect the DC cables if the wiring is designed for 122 % of the rated fuse current. Otherwise, the cable protection for the DC cables must be specially determined.
- Select the fuses for the currents resulting from power $P_{DC100\%}$. Please observe the standards and regulations applicable for the particular location and application.
- Fuse the DC-supply modules according to the Technical data on the AC mains side.
- The DC outputs of the supply modules need not be fused if all connected controllers are fused in accordance with the specifications.
- ”Multi Drive” controllers are default equipped with a fuse in the installation backplane. The fuse is only effective if the DC busbar is used. In this case, a single pole fusing against short-circuit is sufficient.
- ”Single Drive” controllers can be retrofit with a fuse in the mounting backplane. The fuse will only be effective if the DC busbar is used. In this case, a single-pole fusing against short-circuit is sufficient.
  For retrofitting, use the E94AZJA0xx busbar mounting set.
- If the DC bus is wired via the terminals +UG/-UG, always select a 2-pole cable protection.

7.5.8 Filters

The following filters can be used for the DC-supply modules.

Mains filter		DC power supply module	
Type	Device size	Type	Device size
E94AZMP0084	2	E94APNE0104	1
E94AZMP0294	3	E94APNE0364	3
E94AZMP0824	4	E94APNE1004	4
E94AZMP2004	5	E94APNE2454	5

The mains filters are designed for the following conditions:

- 10 interconnected devices,
- each with a 50 m motor cable,
- EMC category C2.

RFI filter		DC power supply module	
Type	Device size	Type	Device size
E94AZRP0084	1	E94APNE0104	1
E94AZRP0294	1	E94APNE0364	3
E94AZRP0824	4	E94APNE1004	4
E94AZRP2004	4	E94APNE2454	5

The RFI filters are designed for the following conditions:

- 6 interconnected devices,
- each with a 10 m motor cable,
- EMC category C2.

In applications with a different number of interconnected devices or different motor cable lengths, the filters may have to be specially dimensioned.

Note!

To observe EMC category C2, measures must be carried out on the device-internal EMC filters of the drive components in the network system. The measures for the individual devices are described in the chapter ”Wiring”, section ”Earthing of internal EMC filters”.

When using the mains filters assigned, conditions must be observed for compliance with EMC class C2:

- The measures for the use on IT systems must be applied to all axis modules in the interconnection (separation of internal filter components from PE).
- The maximum sum total of all motor cable lengths ($\Sigma\, l_{mot}$) for the filter used must be observed.

Motor cable lengths in the interconnection

The assigned filters are designed for $\Sigma\ l_{mot}$ for 6 axis modules (E94AZRP...: 60 m (= 6 x 10 m), E94AZMP...: 600 m (= 6 x 100 m)).

For a different number of axis modules, $\Sigma\ l_{mot}$ can be determined from the following diagrams.

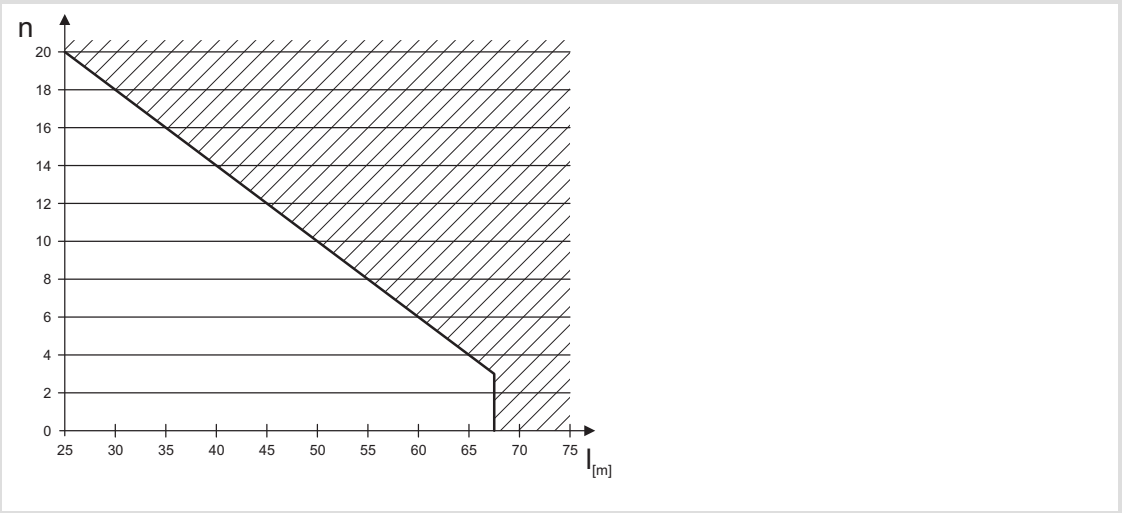

Fig. 7-2 Filter E94AZRP...: Sum total of motor cable lengths as a function of the number of axis modules

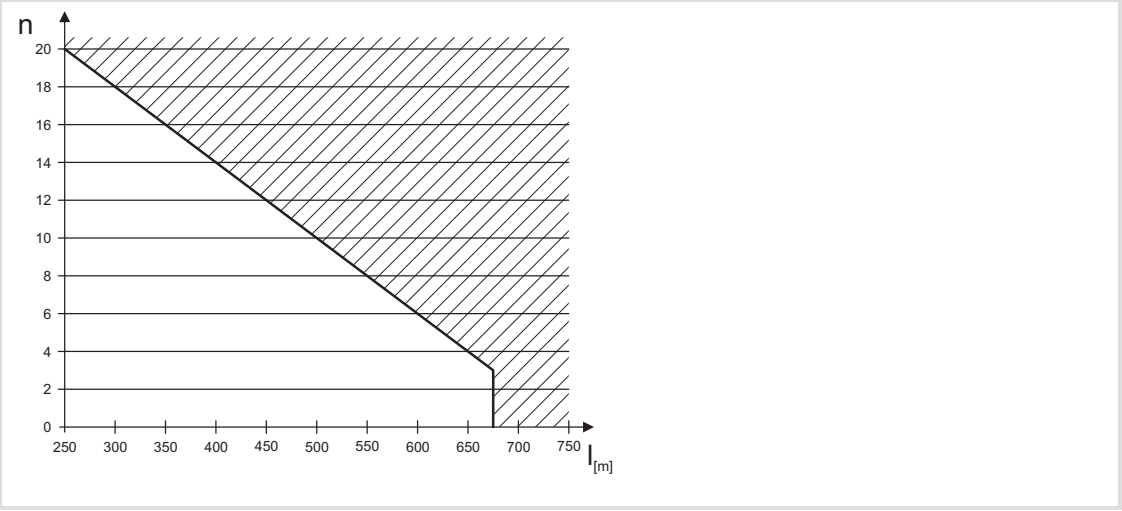

Fig. 7-3 Filter E94AZMP...: Sum total of motor cable lengths as a function of the number of axis modules

Constellations with unfavourable or intensifying parasitic couplings

Compliance with EMC category C2 may also be interfered with by other circumstances:

- Distribution of the axis modules over several control cabinets without efficient HF equipotential bonding between the mounting plates
- No use of Lenze system cables or cables with the same specifications
- Poor connection of motor cable shields
- Motor cable interruptions
- Other interference sources (e.g. switched-mode power supplies)
- Isochronous switching of the inverter output stages

With different motor cable lengths, per axis at least 25 % of the longest cable must be considered when calculating the total motor cable length.

Example: 1	Motor cable length l_{mot} [m]		
Axis	**Actual value**	**min. 25 % of the longest cable**	**To be considered**
1	6	0.25 * 20 = 5	6
2 ... 4	3 * 10		3 * 10
5	20	⇦	20
Total	56	max. permissible for 5 axes: ∑< 60	**56**
		EMC class C2 will be complied with.	☑

Example 2	Motor cable length l_{mot} [m]		
Axis	**Actual value**	**min. 25 % of the longest cable**	**To be considered**
1 ... 4	4 * 5	0.25 * 40 = 10	4 * 10
5	40	⇦	40
Total	60	max. permissible for 5 axes: ∑< 60	**80**
		EMC class C2 will not be complied with.	☒

Example: 3	Motor cable length l_{mot} [m]		
Axis	**Actual value**	**min. 25 % of the longest cable**	**To be considered**
1 ... 3	3 * 100	⇦	3 * 100
4	50	0.25 * 100 = 25	50
5 ... 10	6 * 15		6 * 25
Total	410	max. permissible for 10 axes: ∑ < 500	**500**
		EMC class C2 will be complied with.	☑

Example: 4	Motor cable length l_{mot} [m]		
Axis	**Actual value**	**min. 25 % of the longest cable**	**To be considered**
1 ... 4	4 * 100	⇦	4 * 100
5 ... 10	6 * 15	0.25 * 100 = 25	6 * 25
Total	490	max. permissible for 10 axes: ∑ < 500	**550**
		EMC class C2 will not be complied with.	☒

7.5.9 Cables

Select the cable cross-sections for the currents resulting from power $P_{DC100\%}$. Please observe the standards and regulations applicable for the particular location and application.

7.6 Braking operation in a drive system

7.6.1 Basic considerations

If the regenerative power of a drive exceeds the storage capacity of the DC bus, the excessive energy must be consumed or dissipated. Target of the DC bus is to use the excessive energy for other axes.

Check for all DC-bus operations if the brake power provided by the brake choppers is high enough for the maximum regenerative power that may occur. If necessary, controllers with an integrated brake chopper (single-axis controller instead of a multi-axis controller) must be integrated into the drive system to increase the brake power.

If several brake choppers are used, the following conditions must be met:

- The thresholds of the brake choppers must be the same for all controllers.
- The brake choppers of several controllers are independent of each other. The brake choppers are protected by changing the duty cycle or switching them off temporarily. They are automatically switched on again.
- The limiting monitorings must be considered when dimensioning the continuous brake power for the DC bus:
  – Brake chopper monitoring
  – Brake resistor monitoring
- The temperature monitoring of the brake resistors must lead to power-off, otherwise the brake resistors or devices may be destroyed.
- The peak brake power can be used for 0.5 s in 5-s cycles.

7.7 Application examples

7.7.1 Example 1 - supply module with multi-axis controllers

Assumptions:

- 400 V, 3 AC/PE
- 7 axes in 2 power categories
- no particular dynamic performance requirements

The following motors (Mx) are selected:

Index	Motor type	Rated power [kW]	Efficiency	Rated current [A]
M1 ... M5	MCS14H15	2.5	0.92	6.6
M6 ... M7	MCS09F38	1.2	0.90	2.5

For the above motor data, the following controllers (Gx) are selected:

Index	Controller	Rated power [kW]	Typical motor power [kW]	Power loss P_l [kW]	Rated current [A]
G1 ... G5	E94AMxE0074	4.8	3.0	0.19	7.0
G6 ... G7	E94AMxE0034	1.7	0.75	0.12	2.5

The power required by the drive system is determined with the below formula (📖 7.5.5):

$P_{DCtotal}$ = 5 * (2.5 kW / 0.92 + 0.19 kW) + 2 * (1.2 kW / 0.90 + 0.12 kW)

$P_{DCtotal}$ = 17.4 kW

The calculated power requirement is used to select the supply module:

Index	Supply module (+ mains filter)	Rated power ($P_{DC100\%}$) [kW]
V1	E94APNE0364 + E94AZMP0294	17.5

Note: Only the supply module with mains filter reaches the required power.

Checking the power efficiency:

With 17.5 kW > 17.4 kW, $P_{DC100\%} > P_{DCtotal}$.

Select cables and fuses in accordance with the Technical data.

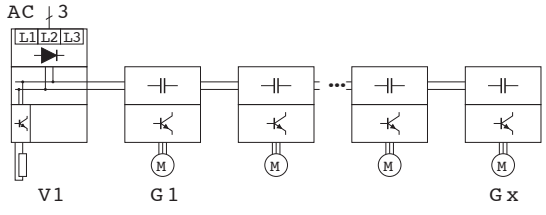

Fig. 7-4 Basic circuit diagram

7.7.2 Example 2 - single-axis controller with multi axes

Assumptions:

- 400 V, 3 AC/PE
- 4 axes in 3 power categories
- no particular dynamic performance requirements

The following motors (Mx) are selected:

Index	Motor type	Rated power [kW]	Efficiency	Rated current [A]
M1	MCS19P30	10.0	0.93	19
M2	MCS14H15	2.5	0.92	6.6
M3 ... M4	MCS09F38	1.2	0.90	2.5

For the above motor data, the following controllers (Gx) are selected:

Index	Controller	Rated power [kW]	Typical motor power [kW]	Power loss P_l [kW]	Rated current [A]
G1	E94ASxE0244	16.3	11.0	0.50	23.5
G2	E94AMxE0074	4.8	3.0	0.19	7.0
G3 ... G4	E94AMxE0034	1.7	0.75	0.12	2.5

The power required by the drive system is determined with the below formula (📖 7.5.5):

$P_{DCtotal}$ = (10 kW / 0.93 + 0.50 kW) + (2.5 kW / 0.92 + 0.19 kW) + 2 * (1.2 kW / 0.90 + 0.12 kW)

$P_{DCtotal}$ = 17.1 kW

The calculated power requirement is used to select the single-axis controller with mains choke:

Index	Controller (+ mains choke)	Rated power ($P_{DC100\%}$) [kW]
(G1)	E94ASxE0244 + E94AZMS0314	18.8

Note: Only the controller with mains choke reaches the required power.

Checking the power efficiency:

With 18.8 kW > 17.1 kW, $P_{DC100\%} > P_{DCtotal}$.

Select cables and fuses in accordance with the Technical data.

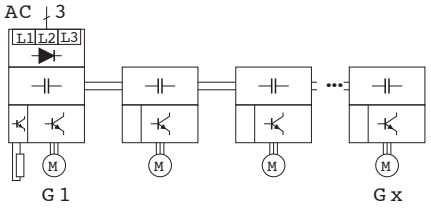

Fig. 7-5 Basic circuit diagram

8 Accessories (overview)

Note!

You can find additional information on the accessories in the catalogue to this product series.

8.1 System overview

The following figure shows the most important components for the implementation of a drive system with the Servo Drives 9400 product range.

On the way from the mains connection to the motor, you can see the basic principle of a drive system on the left path. On the right path, the basic principle of a single-axis drive is described.

In accordance with the requirements of your drive solution, your drive system can be equipped or extended with specially adapted components.

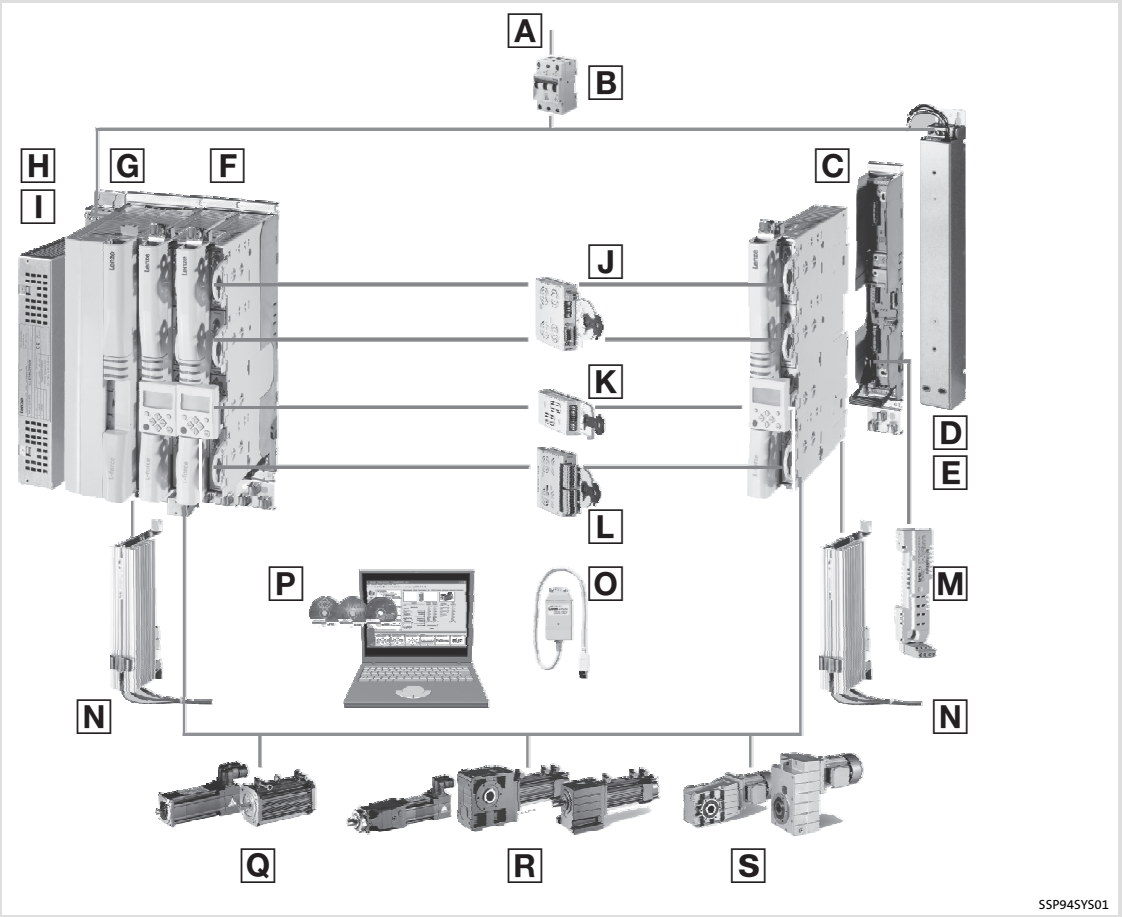

A Mains voltage 3/PE AC 180 ... 528 V ±0 % or 3/PE AC 340 ... 528 V ±0 %
(depending on the device size/device power)
B Mains fusing (not contained in the delivery programme)
C Single Drives 9400 📖 31
and corresponding installation backplanes
D Mains filter for Single Drives 9400 📖 536
E RFI filter for Single Drives 9400 📖 565
F Multi Drives 9400 📖 167
and corresponding installation backplanes
G Power supply modules 9400
📖 241, 📖 289
(for DC bus installations with Multi Drives 9400)
H Mains filter for power supply modules 9400 📖 543
I RFI filter for power supply modules 9400 📖 583

Equipment for all axis modules (device-dependent options):
J Communication modules and extension modules 📖 370
K Memory modules 📖 418
L Safety modules 📖 427
M Motor holding brake control modules 📖 447
N Brake resistors 📖 619
O Diagnostic adapters 📖 502
P L-force Engineer (software)
Q Servo motors (motor catalogue)
R Geared servo motors (")
S Standard geared motors (")
Motor cables/system cables
(manual "System cables")

8.2 Overview of accessories

With the accessories available, the standard devices of the controllers of the Servo Drives 9400 series are directly equipped with functions, interfaces, etc. required for specific drive solutions.

The following overview shows the accessories assigned to the controllers and power supply modules.

1)	Component from this range is absolutely necessary
+	Can be used without restrictions
o	Can be used with restrictions
-	Can be used, but check alternative
^	Already included
---	No use

Accessories	Single Drive			Multi Drive		Power supply modules		VR modules	
Field	GG (device size)			GG		GG		GG	
Designation	1 ... 3	6 ... 7	81 ... 91	1 ... 3	6	1 & 3	4 & 5	1 & 3	Page
Device modules									
Communication modules									from 370
CANopen® E94AYCCA	+	+	+	+	+	---	---	+	
DeviceNet™ E94AYCDN	+	+	+	+	+	---	---	+	
Ethernet 2 Port E94AYCEN	+	+	+	+	+	---	---	+	
EtherNet/IP™ E94AYCEO	+	+	+	+	+	---	---	+	
POWERLINK MN/CN E94AYCEP	+	+	+	+	+	---	---	+	
POWERLINK CN E94AYCEC	+	+	+	+	+	---	---	+	
EtherCAT® E94AYCET	+	+	+	+	+	---	---	+	
PROFIBUS® E94AYCPM	+	+	+	+	+	---	---	+	
PROFINET® E94AYCER	+	+	+	+	+	---	---	+	
INTERBUS E94AYCIB	+	+	+	+	+	---	---	+	
Function modules									from 412
Digital frequency E94AYFLF	+	+	+	+	+	---	---	---	
Cover module	+	+	+	+	+	---	---	+	
Memory modules 1)									from 418
MM220 E94AYM220	---	---	---	---	---	---	---	+	
MM330 E94AYM330	+	+	+	+	+	---	---	---	
MM340 E94AYM340	+	+	+	+	+	---	---	---	
MM430 E94AYM430	+	+	+	+	+	---	---	---	
MM440 E94AYM440	+	+	+	+	+	---	---	---	
Safety modules 1)									from 427
SM0 E94AYAA	+	+	+	+	+	---	---	+	
SM100 E94AYAB	+	+	+	+	+	---	---	---	
SM301 E94AYAE	+	+	+	+	+	---	---	---	
SM302 E94AYAF	+	+	+	+	+	---	---	---	
Motor holding brake control modules									from 447
Voltage class 24 V									
E94AZHX0051 E94AZHA0051	+	---	---	+	---	---	---	---	

Accessories	Single Drive			Multi Drive		Power supply modules		VR modules	
Field	GG (device size)			GG		GG		GG	
Designation	1 ... 3	6 ... 7	81 ... 91	1 ... 3	6	1 & 3	4 & 5	1 & 3	Page
E94AZHY0101 E94AZHB0101	---	+	+	---	+	---	---	---	
Voltage class 205 V									
E94AZHN0025	+	-	-	+	---	---	---	---	
E94AZHY0025 E94AZHN0025	---	+	+	+	+	---	---	---	
Voltage class 180 V									
E94AZHN0026	+	-	-	+	---	---	---	---	
E94AZHY0026 E94AZHN0026	---	+	+	---	+	---	---	---	
Filters									
Mains filter									
E94AZMSxxxx 3 ... 31 A	+	+	---	---	---	---	---	---	536
E94AZMSxxxx 180 ... 415 A (3F480-xxx.290EM)	---	---	+	---	---	---	---	---	579
E94AZMPxxxx 8 ... 29 A	---	---	---	---	---	+	+	---	543
E94AZMPxxxx 82 ... 200 A	---	---	---	---	---	+	+	---	550
E94AZMRxxxx 26 ... 47 A	---	---	---	---	---	---	---	+	558
RFI filter									
E94AZRSxxxx 4 ... 29 A	+	+	---	---	---	---	---	---	565
E94AZRSxxxx 54 ... 95 A	+	+	---	---	---	---	---	---	572
E94AZMSxxxx 180 ... 415 A (3F480-xxx.290EM)	---	---	+	---	---	---	---	---	579
E94AZRPxxxx 8 ... 29 A	---	---	---	---	---	+	+	---	583
E94AZRPxxxx 82 ... 200 A	---	---	---	---	---	+	+	---	590
Sine filter									
EZS3-xxxA200 4 ... 90 A	+	+	-	-	-	---	---	---	597
EZS3-xxxA200 115 ... 150 A	+	+	-	-	-	---	---	---	605
EZS3-xxxA200 180 ... 480 A	+	+	-	-	-	---	---	---	611
Installation accessories									
EMC kit									from 616
E94A...	+	+	+	+	+	+	+	+	
Busbar mounting sets									from 525
E94AZJA003	+	---	---	^	---	---	---	---	
E94AZJA007	+	---	---	^	---	---	---	---	
E94AZJA024	+	---	---	^	---	---	---	---	
Input module									from 516
E94AZEX100	+	o	o	+	+	+	+	+	
Brake resistors									from 619
ERBxxxxxRxxxW	+	+	+	---	---	+	+	+	
Diagnostics									from 502
PC connection									
E94ACUS USB adapter	+	+	+	+	+	---	---	+	

Accessories	Single Drive			Multi Drive		Power supply modules		VR modules	
Field	GG (device size)			GG		GG		GG	
Designation	1 ... 3	6 ... 7	81 ... 91	1 ... 3	6	1 & 3	4 & 5	1 & 3	Page
Keypad									
E94AZKAE keypad	+	+	+	+	+	---	---	+	
E94AZKHT hand-held terminal	+	+	+	+	+	---	---	+	
24 V DC power supply units									from 632
EZV1200-000	+	+	+	+	+	+	+	+	
EZV2400-000	+	+	+	+	+	+	+	+	
EZV4800-000	+	+	+	+	+	+	+	+	
EZV1200-001	+	+	+	+	+	+	+	+	
EZV2400-001	+	+	+	+	+	+	+	+	
EZV4800-001	+	+	+	+	+	+	+	+	
DC fuses									
EFSARxxxxARHN EFSGRxxxxAYxz	+	---	---	+	+	---	---	---	
EFSGRXXXXANVN	---	+	---	---	---	---	---	---	
EFSGRXXXXANWN	---	---	+	---	---	---	---	---	
System cables									
see manual "System cables"	+	+	+	+	+	+	+	+	

8.3 Communication modules

8.3.1 Safety instructions



Danger!

Improper use of the module and the standard device may cause serious injury and property damage.

Observe the chapters ”Safety instructions” and ”Residual hazards” contained in the instructions for the standard device.



Stop!

The device contains components that can be destroyed by electrostatic discharge!

Before working on the device, the personnel must ensure that they are free of electrostatic charge by using appropriate measures.



Stop!

Before mounting/dismounting, switch off the supply voltage to prevent electronic modules from damage.

8.3.2 Important notes



Communication manuals

Further information on the communication modules is provided in the respective communication manuals.

The PDF files are provided on the Internet in the download area at

http://www. Lenze.com

8.3.3 Mounting

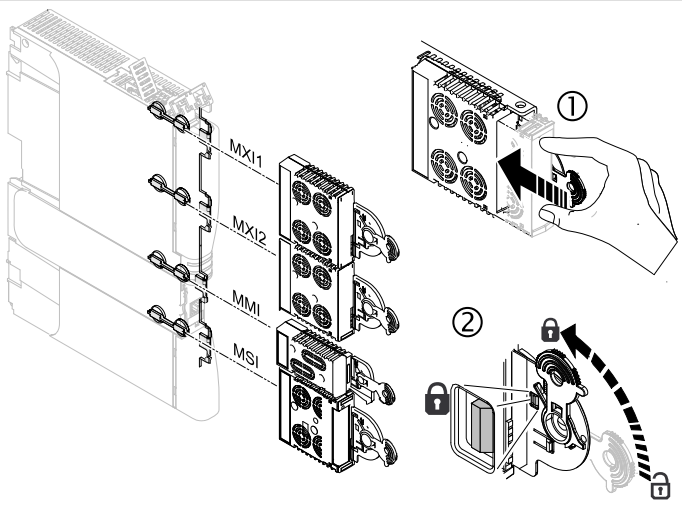

E94YCXX001G

8.3.4 Dismounting



E94AYCXX001H

8.3.5 Possible device module combinations

Communication and extension modules can be used to adapt the Servo Drives 9400 to the machine requirements. For this, the HighLine version is equipped with module slots MXI1 and MXI2.

The following possible combinations are permissible:

	MXI1										
MXI2	E94AYFLF	E94AYCCA	E94AYCDN	E94AYCET	E94AYCEN	E94AYCEP	E94AYCEC	E94AYCPM	E94AYCER	E94AYCEO	E94AYCIB
E94AYFLF	-	☑	☑	☑	☑	☑	☑	☑	☑	☑	☑
E94AYCCA	☑	-	☑	☑	☑	☑	☑	☑	☑	☑	☑
E94AYCDN	☑	☑	☑	☑	☑	☑	☑	☑	☑	☑	☑
E94AYCET	☑	☑	☑	☑	☑	☑	☑	☑	☑	☑	☑
E94AYCEN	☑	☑	☑	☑	-	☑	☑	☑	☑	☑	☑
E94AYCEP	☑	☑	☑	☑	☑	☑	☑	☑	☑	☑	☑
E94AYCEC	☑	☑	☑	☑	☑	☑	☑	☑	☑	☑	☑
E94AYCPM [1)]	☑	☑	☑	☑	☑	☑	☑	☑	☑	☑	☑
E94AYCER [1)]	☑	☑	☑	☑	☑	☑	☑	☑	☑	☑	☑
E94AYCEO	☑	☑	☑	☑	☑	☑	☑	☑	☑	☑	☑
E94AYCIB	☑	☑	☑	☑	☑	☑	☑	☑	☑	☑	☑

☑ Permissible
- Not possible
1) PROFIsafe can only be used in MXI1

E94AYFLF	Master frequency
E94AYCCA	CANopen®
E94AYCDN	DeviceNet™
E94AYCET	EtherCAT®
E94AYCEN	Ethernet 2 Port
E94AYCEP	POWERLINK MN/CN
E94AYCEC	POWERLINK CN
E94AYCPM	PROFIBUS®
E94AYCER	PROFINET®
E94AYCEO	EtherNet/IP™
E94AYCIB	INTERBUS

8.3.6 Ethernet interface

Ethernet cable specifications

Note!
Only use cables complying with the below specifications.

Ethernet cable specifications	
Ethernet standard	Standard Ethernet (according to IEEE 802.3), 100base TX (fast Ethernet)
Cable type	S/FTP (Screened Foiled Twisted Pair), ISO/IEC 11801 or EN 50173, CAT 5e
Damping	23.2 dB (at 100 MHz and per 100 m)
Crosstalk damping	24 dB (at 100 MHz and per 100 m)
Return loss	10 dB (per 100 m)
Surge impedance	100 Ω

Ethernet connection

RJ45 socket	PIN	Signal
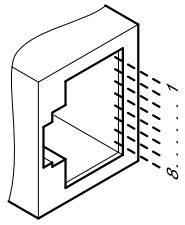 E94AYCXX004C	1	Tx +
	2	Tx -
	3	Rx +
	4	-
	5	-
	6	Rx -
	7	-
	8	-

Note!
Plug/remove the Ethernet cable plug in a straight manner (at right angles) into/from the socket to make sure that the RJ45 socket will not be damaged.

8.3.6.1 Ethernet

Identification

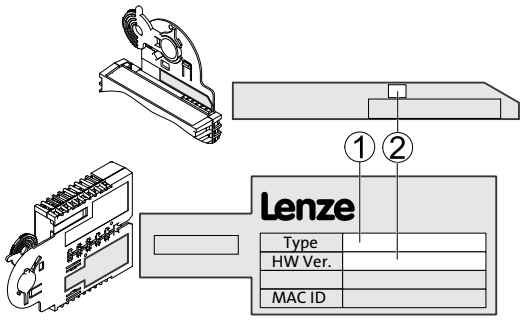

E94YCEN008

	①					②
Type code	**E94**	**A**	**Y**	**C**	**EN**	**Vx**
Product series						
Device generation						
Module identification: extension module						
Module type: communication module						
Ethernet						
Hardware version						

Elements

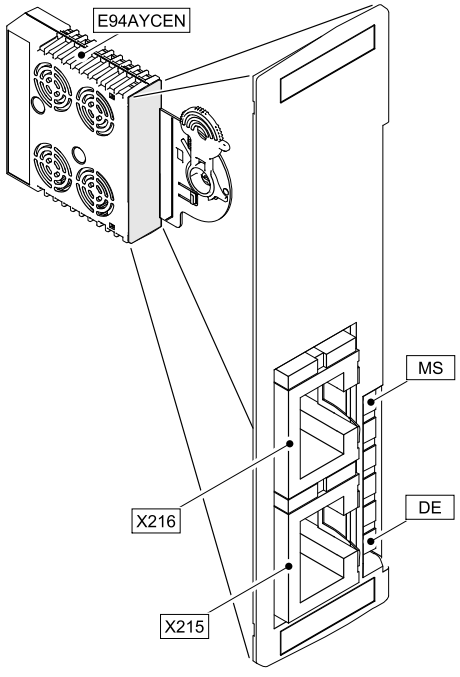

E94YCEN001A

Connections

Pos.	Description
X215	Ethernet connections Design: RJ45 socket to IEC 60603-7
X216	

Displays

LED			
Pos.	Colour	Condition	Description
MS	green	on	The communication module is supplied with voltage.
DE	red	on	The communication module is not accepted by the standard device (see notes provided in the instructions for the standard device).
LEDs at connection X215/X216:			
-	yellow	On / blinking	Data is being exchanged via Ethernet.
-	green	on	Ethernet connection is available.

8.3.6.2 POWERLINK

Supported functionalities:

- Managing node (with up to 50 nodes)
- Controlled node

Identification

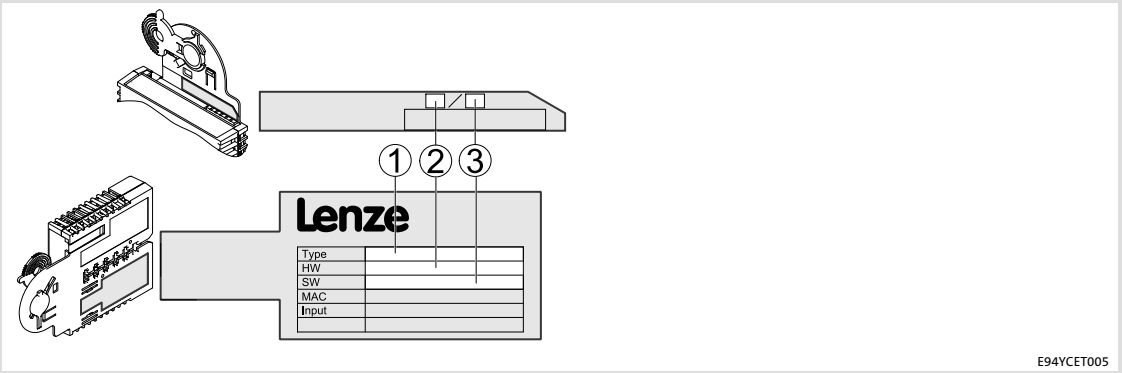

	①					②	③
	E94	**A**	**Y**	**C**	**EP**	**VA**	**0.50**
Product range							
Version							
Module description: extension module							
Module type: communication module							
POWERLINK MN/CN							
Hardware version							
Software version							

Elements

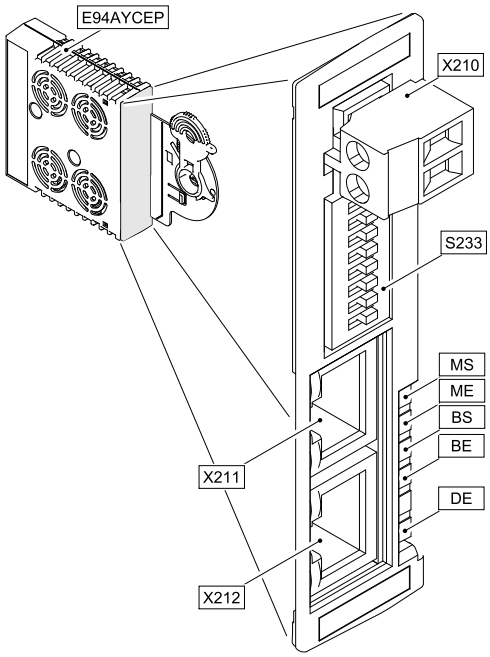

Connections

Pos.	Description
X210	Connection for the external supply of the communication module Design: Plug connector with screw connection, 2-pole
X211	Connection for POWERLINK Design: RJ45 socket according to IEC 60603-7, with integrated LEDs
X212	

Displays

LED			
Pos.	**Colour**	**Condition**	**Description**
MS	green	blinking	The communication module is supplied with voltage but has no connection to the standard device (standard device is either switched off, in the initialisation phase, or not available).
		on	The communication module is being supplied with voltage and is connected to the standard device.
ME	red	on	A communication module error has occurred.
BS	green	The LED functions are controlled by the NMT state machine.	
		off	The communication module is not active at the fieldbus. Status: NMT_GS_OFF, NMT_GS_INITIALISATION, NMT_CS_NOT_ACTIVE / NMT_MS_NOT_ACTIVE
			The POWERLINK network is in the initialisation phase. (The LED flashed once per second.) Status: NMT_CS_PREOPERATIONAL_1 / NMT_MS_PREOPERATIONAL_1
			The POWERLINK network is in the initialisation phase with cyclic traffic. (The LED flashed twice per second.) Status: NMT_CS_PREOPERATIONAL_2 / NMT_MS_PREOPERATIONAL_2
			The POWERLINK node waits for the start signal. (The LED flashes three times per second.) Status: NMT_CS_READY_TO_OPERATE / NMT_MS_READY_TO_OPERATE
			The POWERLINK node has not found any managing node and is in the "BASIC-Ethernet" operating mode. (The LED is blinking with a frequency of 10 Hz.) Status: NMT_CS_BASIC_ETHERNET
			The POWERLINK node is in the "Stopped" state; waiting for switch-off. (The LED is blinking with a frequency of 2.5 Hz.) Status: NMT_CS_STOPPED
			The POWERLINK node is in the operating phase. (The LED is permanently lit.) Status: NMT_CS_OPERATIONAL / NMT_MS_OPERATIONAL
BE	red	on	A fieldbus error has occurred.
DE	red	on	The communication module is not accepted by the standard device. See notes provided in the documentation for the standard device.
Signalling at the RJ45 sockets (X211, X212):			
-	red	on	A POWERLINK collision has occurred.
-	green	off	No POWERLINK connection
		on	Die POWERLINK connection is available.
		blinking	Active data communication via POWERLINK

DIP switch

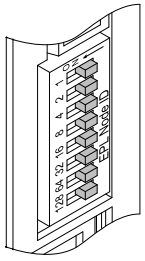

E94YCEP001D

Pos.	Description
S233	Node addressing: The node address results from the sum of all switches being set to "ON". ● Example: Switches 32, 8, 4 = ON → address = 44 ● E94AYCEP address as master: 240 ● E94AYCEP address as slave: 1 ... 100 with E94AYCEP as master 1 ... 239 with another master

Note!

The Lenze setting of all switches is OFF.

Observe the information on the setting of the node address in the POWERLINK communication module.

External voltage supply

Supply the communication module via the connection X210 by means of a separate supply voltage.

Designation	Explanation
+	External voltage supply U = 24 V DC (20.4 V - 0 % ... 28.8 V + 0 %) I = 140 mA
-	Reference potential for external voltage supply

For greater distances between the control cabinets, use a power supply unit in each control cabinet.

Screw terminal data

Area	Values	
Electrical connection	Plug connector with screw connection	
Possible connections	rigid:	
		1.5 mm^2 (AWG 16)
	flexible:	
	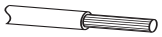	without wire end ferrule 1.5 mm^2 (AWG 16)
	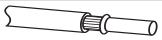	with wire end ferrule, without plastic sleeve 1.5 mm^2 (AWG 16)
		with wire end ferrule, with plastic sleeve 1.5 mm^2 (AWG 16)
Tightening torque	0.5 ... 0.6 Nm (4.4 ... 5.3 lb-in)	
Stripping length	6 mm	

8.3.6.3 POWERLINK CN

Identification

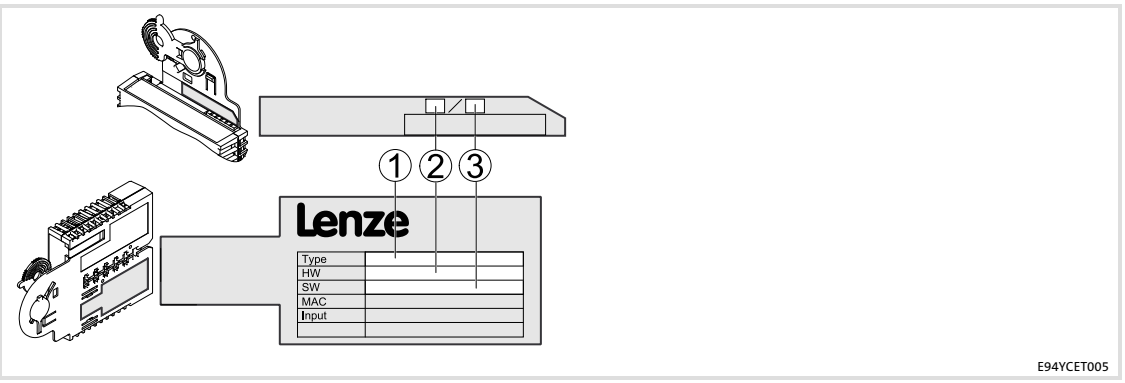

	①				②	③
	E94	**A**	**Y**	**C**	**EC**	**VC**	**1.0**
Product range							
Version							
Module description: extension module							
Module type: communication module							
POWERLINK CN							
Hardware version							
Software version							

Elements

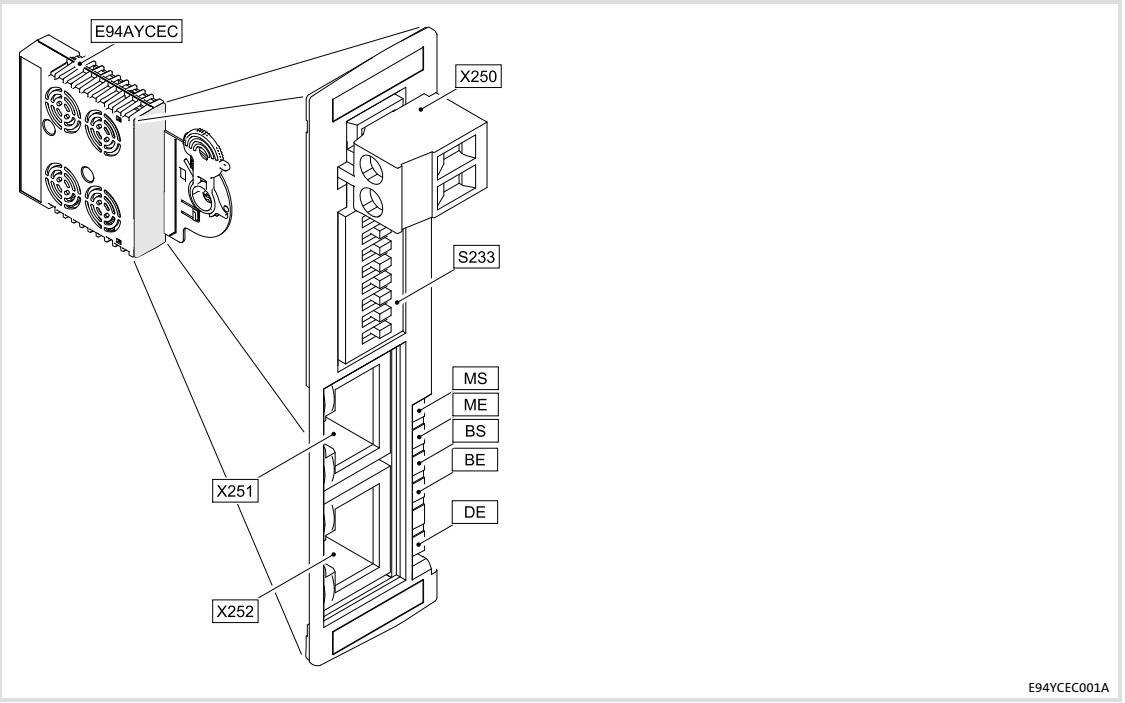

Connections

Pos.	Description
X250	Connection for the external supply of the communication module Design: Plug connector with screw connection, 2-pole
X251	Connection for POWERLINK Design: RJ45 socket according to IEC 60603-7, with integrated LEDs
X252	

Displays

LED			
Pos.	Colour	Condition	Description
MS	green	blinking	The communication module is supplied with voltage but has no connection to the standard device (standard device is either switched off, in the initialisation phase, or not available).
		on	The communication module is being supplied with voltage and is connected to the standard device.
ME	red	on	A communication module error has occurred.
BS	green	The LED functions are controlled by the NMT state machine.	
		off	The communication module is not active at the fieldbus. Status: NMT_GS_OFF, NMT_GS_INITIALISATION, NMT_CS_NOT_ACTIVE / NMT_MS_NOT_ACTIVE
			The POWERLINK network is in the initialisation phase. (The LED flashed once per second.) Status: NMT_CS_PREOPERATIONAL_1 / NMT_MS_PREOPERATIONAL_1
			The POWERLINK network is in the initialisation phase with cyclic traffic. (The LED flashed twice per second.) Status: NMT_CS_PREOPERATIONAL_2 / NMT_MS_PREOPERATIONAL_2
			The POWERLINK node waits for the start signal. (The LED flashes three times per second.) Status: NMT_CS_READY_TO_OPERATE / NMT_MS_READY_TO_OPERATE
			The POWERLINK node has not found any managing node and is in the ”BASIC-Ethernet” operating mode. (The LED is blinking with a frequency of 10 Hz.) Status: NMT_CS_BASIC_ETHERNET
			The POWERLINK node is in the ”Stopped” state; waiting for switch-off. (The LED is blinking with a frequency of 2.5 Hz.) Status: NMT_CS_STOPPED
			The POWERLINK node is in the operating phase. (The LED is permanently lit.) Status: NMT_CS_OPERATIONAL / NMT_MS_OPERATIONAL
BE	red	on	A fieldbus error has occurred.
DE	red	on	The communication module is not accepted by the standard device. See notes provided in the documentation for the standard device.
Signalling at the RJ45 sockets (X211, X212):			
-	red	on	A POWERLINK collision has occurred.
-	green	off	No POWERLINK connection
		on	Die POWERLINK connection is available.
		blinking	Active data communication via POWERLINK

DIP switch

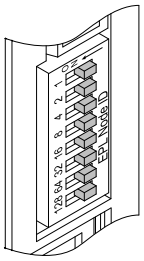

E94YCEP001D

Pos.	Description
S233	Node addressing: The node address results from the sum of all switches being set to "ON". ● Example: Switches 32, 8, 4 = ON → address = 44 ● Address area: 1 ... 100 1 ... 100 with E94AYCEP as master 1 ... 239 with another master

Note!

The Lenze setting of all switches is OFF.

Observe the information on the setting of the node address in the POWERLINK communication module.

External voltage supply

Supply the communication module via the connection X210 by means of a separate supply voltage.

Designation	Explanation
+	External voltage supply U = 24 V DC (20.4 V - 0 % ... 28.8 V + 0 %) I = 140 mA
-	Reference potential for external voltage supply

For greater distances between the control cabinets, use a power supply unit in each control cabinet.

Screw terminal data

Area	Values	
Electrical connection	Plug connector with screw connection	
Possible connections	rigid:	
		1.5 mm² (AWG 16)
	flexible:	
		without wire end ferrule 1.5 mm² (AWG 16)
	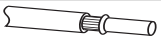	with wire end ferrule, without plastic sleeve 1.5 mm² (AWG 16)
		with wire end ferrule, with plastic sleeve 1.5 mm² (AWG 16)
Tightening torque	0.5 ... 0.6 Nm (4.4 ... 5.3 lb-in)	
Stripping length	6 mm	

8.3.6.4 EtherCAT®

Identification

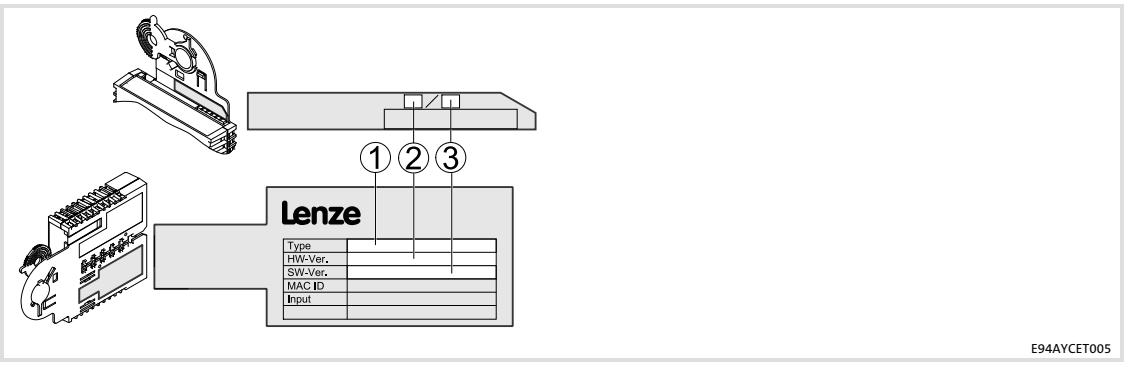

	①					②	③
	E94	A	Y	C	ET	VE	03.00
Product range							
Version							
Module ID: extension module							
Module type: communication module							
EtherCAT							
Hardware version							
Software version							

Elements

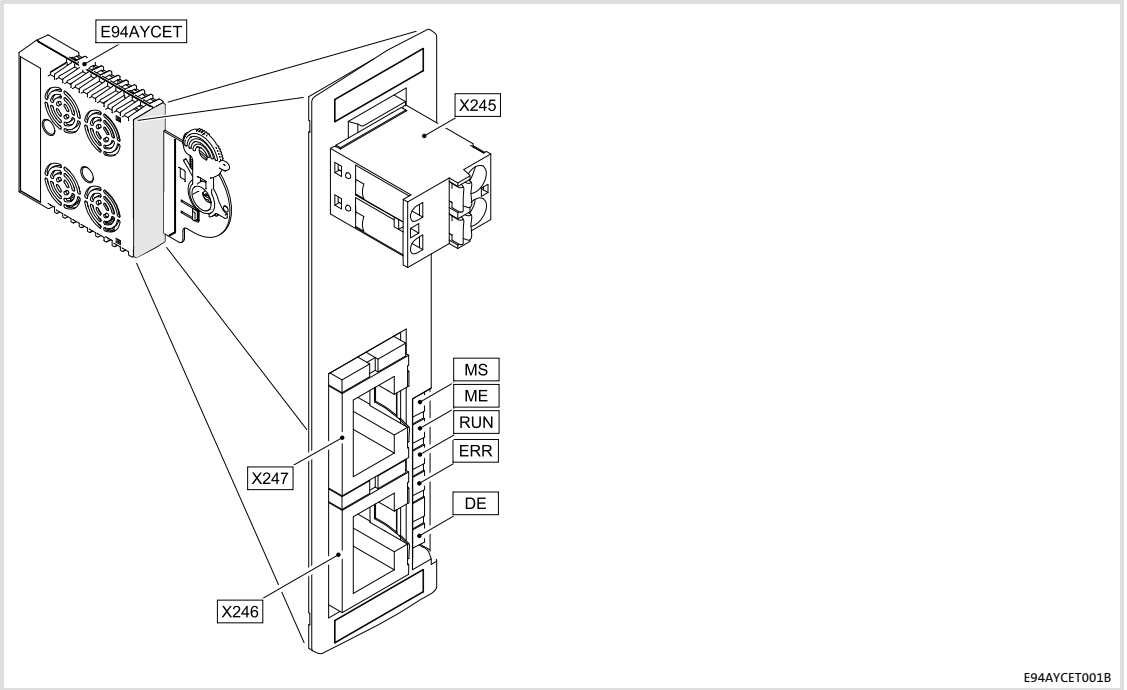

Connections

Pos.	Description
X245	Connection for the external supply of the communication module Design: Plug connector with spring connection, 2-pole
X246	EtherCAT input (IN) Design: RJ45 socket according to IEC 60603-7
X247	EtherCAT output (OUT) Design: RJ45 socket according to IEC 60603-7

Displays

LED			
Pos.	Colour	Condition	Description
MS	green	on	 The communication module is supplied with voltage and has a connection to the standard device.
		blinking	 The communication module is supplied with voltage but has no connection to the standard device (standard device is either switched off, in the initialisation phase, or not available).
ME	red	on	 An error in the communication module has occurred.
RUN	green	off	The communication module is not active on the fieldbus or is in the ”Init” status.
		blinking	 ”Pre-operational” status active: ● Access to parameters and objects possible. ● No process data exchange
		blinking once (single flash)	 ”Safe-operational” status active: ● The data are not active in the standard device yet.
		on	 The communication module is in the ”Operational” status.
ERR	red	off	No error
		blinking	 The configuration is invalid/faulty.
		blinking once (single flash)	 ● A state change that was not requested has occurred. (The slave application has changed the EtherCAT status independently.) ● Synchronisation error (The EtherCAT node changes to the ”Safe-operational” status automatically.)
		blinking twice (double flash)	 An ”Application Watchdog Timeout” or a ”Sync Manager Watchdog Timeout” has occurred.
DE	red	on	 The communication module is not accepted by the standard device, or the standard device is not active. (See notes in the documentation for the standard device.)
L/A	green	on	 Physical EtherCAT connection is available.
		flickering	 Data are exchanged via EtherCAT.
B	red	off	This LED is not used.

External voltage supply

Note!

In the case of an external voltage supply and for greater distances between the control cabinets, always use a separate power supply unit (SELV/PELV) that is safely separated in accordance with EN 61800-5-1 in each control cabinet.

The external voltage supply of the communication module is required if EtherCAT communication is to remain intact in case the supply of the standard device fails.

Supply the communication module via the 2-pole plug connector (X245) with a separate supply voltage.

Designation	Description
+	External voltage supply U = 24 V DC (20.4 V - 0 % ... 28.8 V + 0 %) I = 130 mA
-	Reference potential for external voltage supply

Terminal data

Field	Values	
Electrical connection	2-pin plug connector with spring connection	
Possible connections	rigid:	
		1.5 mm² (AWG 16)
	flexible:	
		without wire end ferrule 1.5 mm² (AWG 16)
	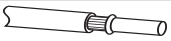	with wire end ferrule, without plastic sleeve 1.5 mm² (AWG 16)
		with wire end ferrule, with plastic sleeve 1.5 mm² (AWG 16)
Stripping length	9 mm	

8.3.6.5 EtherNet/IP™

Identification

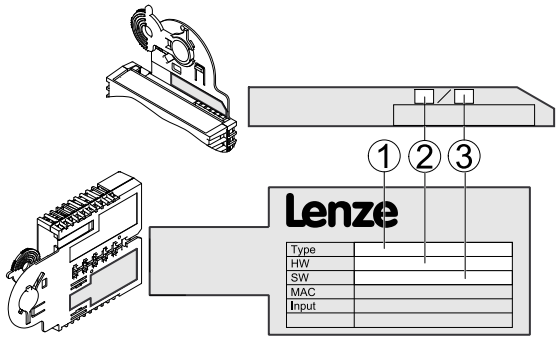

E94YCET005

	①				②	③
	E94	**A**	**Y**	**C**	**EO**	**VE**	**1.00**

Product series
Device generation
Module identification: extension module
Module type: communication module
EtherNet/IP
Hardware version
Software version

Elements

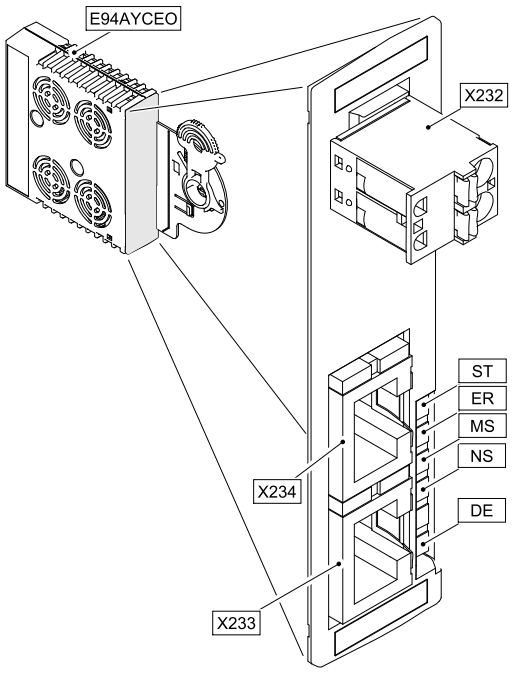

E94YCEO001B

Pos.	Description	Detailed information
X232	Connection for external voltage supply • 2-pole plug connector with spring connection	
X233 X234	EtherNet/IP connections • RJ45 sockets • With 2 LED status displays, respectively, for diagnostics	
ST ER MS NS DE	LED status displays for diagnostics	411

Module status displays

Module status displays are displayed by the LEDs **ST**, **ER** and **DE**.

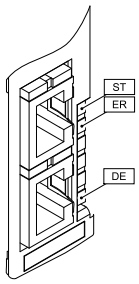

E94YCEO001E

LED	Colour	Status	Description
ST	green	on	The communication module is being supplied with voltage and is connected to the standard device.
		blinking	 The communication module is supplied with voltage but has no connection to the standard device (The standard device is either switched off, in the initialisation phase, or not available).
ER	red	on	A communication module error has occurred.
DE	red	on	The communication module is not accepted by the standard device or the standard device is not active. (See notes provided in the documentation for the standard device.)

CIP status displays

CIP status displays are indicated by the LEDs **MS** and **NS**.

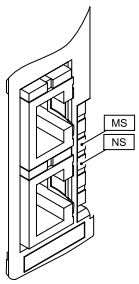

E94YCEO001E

LED	Colour / status		Description
	green	red	
MS	off	off	CIP module status: ”Nonexistent” The communication module is not supplied with voltage.
	off	on	 CIP module status: ”Major Unrecoverable Fault” The communication module has an unrecoverable fault. The status is set if the pending, status determining device fault is responded with a system fault.
	off	blinking	 CIP module status: ”Major Recoverable Fault” The communication module has a recoverable fault. The status is set if the pending, status determining device fault is responded with a fault, trouble, quick stop .by trouble, warning locked or warning.
	on	off	 CIP module status: ”Operational” The communication module operates correctly.

LED	Colour / status		Description
	green	red	
MS	blinking	off	 CIP module status: ”Standby” The communication module has not been configured completely or the configuration is faulty.
	blinking	blinking	 CIP module status: ”Device Self Testing” The communication module is performing a self test.
NS	off	off	CIP network status: ”No IP Address” The communication module is not supplied with voltage or has not received an IP address yet.
	off	on	 CIP network status: ”Duplicate IP” The communication module cannot access the fieldbus (IP address conflict).
	off	blinking	 CIP network status: ”Connection Timeout” A time-out has occurred.
	on	off	 CIP network status: ”Connected” The communication module operates correctly and is connected to the scanner.
	blinking	off	 CIP network status: ”No Connections” The communication module ... ● operates correctly; ● has been assigned with an IP address; ● has not been integrated yet into the network by the scanner.
	blinking	blinking	 CIP network status: ”Self-Test” The communication module is performing a self test.

Status displays at the RJ45 sockets (X233, X234)

The LEDs **Link** and **Act** at the RJ45 sockets display the Ethernet connection status.

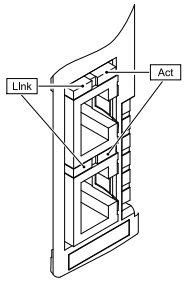

E94YCEO001E

LED	Colour	Status	Description
Link	Green	Off	No Ethernet connection
		On	 Physical Ethernet connection is available.
Act	yellow	Off	No Ethernet data transfer
		On or flickering	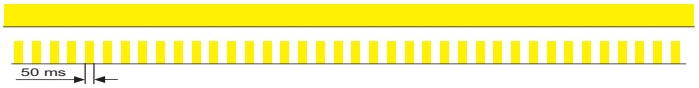 Data is being exchanged via Ethernet.

8.3.7 DeviceNet™

Identification

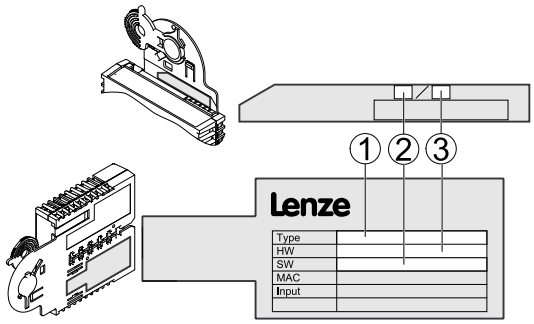

	①				②	③
	E94	A	Y	C	DN	VA	1.00

Product range
Version
Module identification: extension module
Module type: communication module
DeviceNet
Hardware version
Software version

Elements

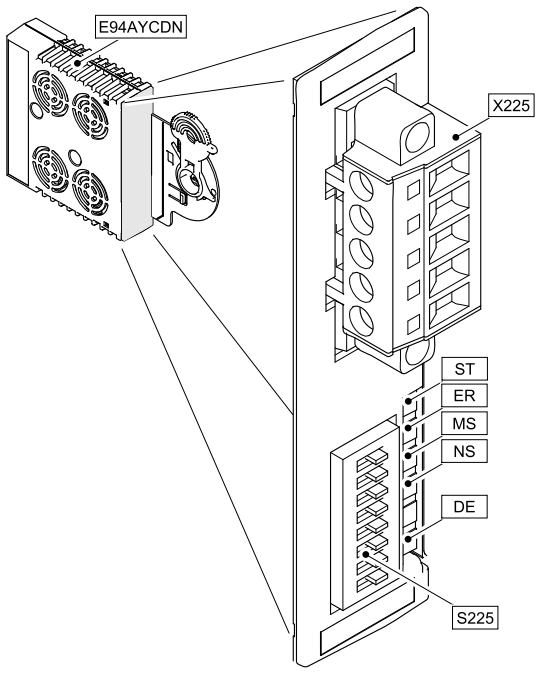

Connections

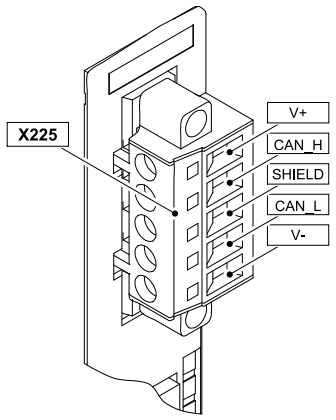

E94YCDN001C

Designation	Cable colour	Description
V+	red	External voltage supply ● U = 24 V DC ● I_{max} = 170 mA
CAN_H	white	Data line / input for bus terminating resistor (120 Ω)
SHIELD		Shielding
CAN_L	blue	Data line / input for bus terminating resistor (120 Ω)
V-	black	Reference potential for external voltage supply

Displays

Pos.	Colour / status		Description
ST	green is on		The communication module is supplied with voltage and has a connection to the standard device.
	green is blinking		The communication module is supplied with voltage but is not connected to the standard device (standard device is switched off, being initialised, or not available).
ER	red is on		An error has occurred on the communication module.
MS	**green**	**red**	
	off	off	The communication module is not supplied with voltage.
	off	on	The communication module is defective and must be replaced.
	off	blinking	The error in the communication module can be removed.
	on	off	The communication module works properly.
	blinking	off	The communication module has not been completely configured yet or configuration is faulty.
	blinking	blinking	The communication module is in self-test mode.
NS	**green**	**red**	
	off	off	The communication module is not supplied with voltage via DeviceNet or the ”Duplicate MAC ID” test has not been completed yet.
	off	on	The communication module cannot access the bus (e.g. ”Duplicate MAC ID”, bus off, invalid baud rate etc.).
	off	blinking	The error in the communication module can be removed.
	on	off	The communication module works properly and has established a connection to the scanner.
	blinking	off	The communication module ... ● works properly; ● has completed the ”Duplicate MAC ID” test; ● has not yet been integrated by the scanner.
	blinking	blinking	The communication module ... ● is in error status; ● has received and accepted a telegram for identifying the faulty devices (”Identify Communication Faulted Request”).
DE	red is on		The communication module is not accepted by the standard device (see notes given in the documentation of the standard device).

DIP switch

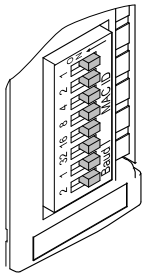

E94YCDN001D

Pos.	Switch positions								
	Baud rate			Node address (MAC ID)					
	2	1	kbps	32	16	8	4	2	1
S225	OFF	OFF	125	The station address results from the sum of the binary values of switches 1 ... 32. ● Example: Station address 44 → switches 32, 8, 4 = ON (32 + 8 + 4 = 44) ● Valid address range: 0 ... 63 ● The Lenze setting for all switches is OFF.					
	OFF	**ON**	250						
	ON	OFF	500						
	ON	ON	No function						

Note!

Please observe the information about the setting of the DIP switches given in the ”Commissioning” and ”Appendix” chapters of the E94AYCDN communication manual (DeviceNet).

Bus cable length

Depending on the baud rate and the cable type used (thick cable/thin cable), the following bus cable lengths are possible:

Baud rate [kbps]	Bus cable lengths [m]	
	Thick cable	Thin cable
125	500	100
250	250	
500	100	

If both thick and thin cable types are used, the maximum cable lengths can be defined according to the baud rates as follows:

Baud rate [kbps]	Max. bus cable length
125	500 m = L_{thick} + 5 L_{thin}
250	250 m = L_{thick} + 2.5 L_{thin}
500	100 m = L_{thick} + L_{thin}

L_{thick}: thick cable length

L_{thin} : thin cable length

Note!

Select a baud rate in dependency of the data volume, cycle time and number of nodes just high enough to suit your application.

External supply

The communication module is externally supplied with voltage via the DeviceNet cable at the 5-pole plug connector (X225).

Note!

Use a safely separated power supply unit (”SELV”/”PELV”) according to EN 61800-5-1.

► The external voltage supply of the communication module is always required.

► Communication with a standard device which is separated from the mains is not possible.

Terminal	Cable colour	Description
V+	Red	External voltage supply ● U = +24 V DC ● I_{max} = 170 mA
V-	black	Reference potential for external voltage supply

Terminal data

Type	Values	
Electrical connection	Plug connector with double screw connection	
Possible connections	rigid:	
		2.5 mm² (AWG 14)
	flexible:	
	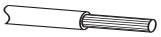	without wire end ferrule 2.5 mm² (AWG 14)
	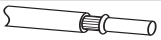	with wire end ferrule, without plastic sleeve 2.5 mm² (AWG 14)
		with wire end ferrule, with plastic sleeve 2.5 mm² (AWG 14)
Tightening torque	0.5 ... 0.6 Nm (4.4 ... 5.3 lb-in)	
Stripping length	7 mm	

8.3.8 PROFIBUS®

Identification

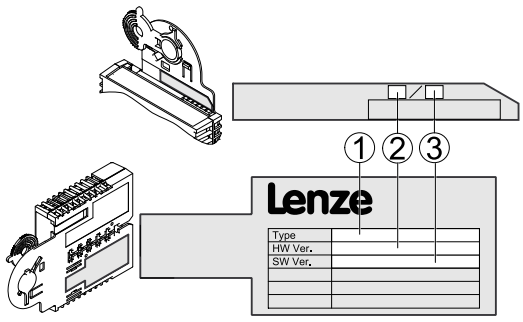

E94YCPM005

	①					②	③
	E94	**A**	**Y**	**C**	**PM**	**1A**	**01.00**

- Product series
- Version
- Module identification: extension module
- Module type: communication module
- PROFIBUS
- Hardware version
- Software version

Elements

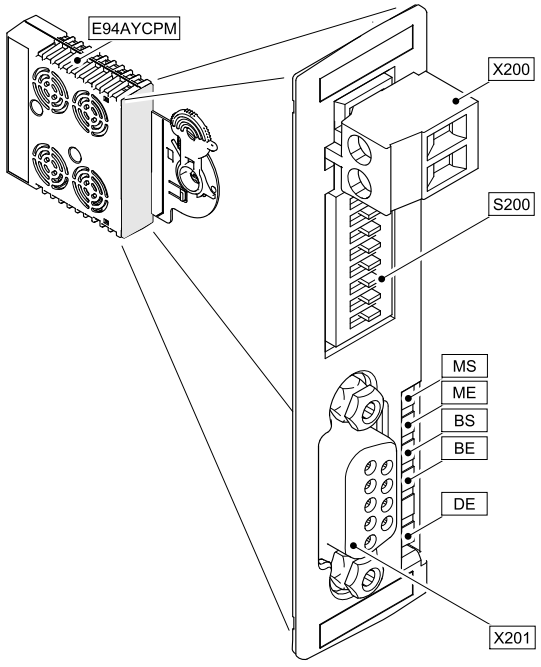

E94YCPM001A

Connections

Pos.	Description
X200	External supply of the communication module Design: Plug connector with screw connection, 2-pole
X201	Connection for PROFIBUS Design: Sub-D socket, 9-pole

Displays

LED			
Pos.	Colour	Condition	Description
MS	Green	On	The communication module is supplied with voltage and connected to the standard device.
		Blinking	The communication module is supplied with voltage, but has no connection to the standard device. (The standard device is switched off, initialising, or not present.)
ME	Red	On	An error in the communication module has occurred.
BS	Green	Blinking	Communication via the communication module has been established. PROFIBUS communication is active.
BE	Red	On	Bus monitoring has been triggered.
DE	Red	On	The communication module is not accepted by the standard device. (See notes in the documentation for the standard device.)

Assignment of the Sub-D socket

Connection of PROFIBUS to 9-pin Sub-D socket (X201):

View	Pin	Designation	Explanation
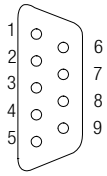	1	free	-
	2	free	-
	3	RxD/TxD-P	Data line B (received data/transmitted data plus)
	4	RTS	Request To Send (received data/transmitted data, no differential signal)
	5	M5V2	Data ground (ground to 5V)
	6	P5V2	5 V DC / 30 mA (bus termination)
	7	free	-
	8	RxD/TxD-N	Data line A (received data/transmitted data minus)
	9	free	-

DIP switch

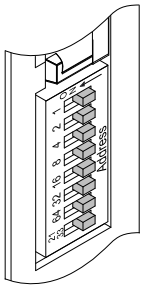

E94YCPM001D

Pos.	Description
S200	**Switches 1 ... 64:** bus station addressing The station address results from the sum of all switches in "ON" position. ● Example: switches 32, 8, 4 = ON → address = 44 ● Address range: 1 ... 126 **Switch 2133:** establishing compatibility with the communication module EMF2133IB

Note!

The Lenze setting of all switches is OFF.

Please observe the information provided in the PROFIBUS Communication Manual about the setting of the station address and the EMF2133IB compatibility.

External voltage supply

Note!

In the case of an external voltage supply and for greater distances between the control cabinets, always use a separate power supply unit (SELV/PELV) that is safely separated in accordance with EN 61800-5-1 in each control cabinet.

The external voltage supply of the communication module is required if communication via the bus system is to continue in the event of a power supply failure of the standard device.

- The external voltage supply of the communication module is required if communication is to continue when the power supply of the standard device fails.
- Access to parameters of a standard device disconnected from the mains is not possible.
- The external voltage supply is effected via the 2-pole plug connector.

Assignment of the 2-pole plug connector (X200)

Designation	Description
+	U = 24 V DC (20.4 V - 0 % ... 28.8 V + 0 %) I = 130 mA
-	Reference potential for external voltage supply

Terminal data

Area	Values	
Electrical connection	Plug connector with screw connection	
Possible connections	rigid:	
		1.5 mm² (AWG 16)
	flexible:	
		without wire end ferrule 1.5 mm² (AWG 16)
		with wire end ferrule, without plastic sleeve 1.5 mm² (AWG 16)
		with wire end ferrule, with plastic sleeve 1.5 mm² (AWG 16)
Tightening torque	0.5 ... 0.6 Nm (4.4 ... 5.3 lb-in)	
Stripping length	6 mm	

Specification of the transmission cable

Note!

Only use cables complying with the listed specifications of the PROFIBUS user organisation.

Field	Values
Specific resistance	135 ... 165 Ω/km, (f = 3 ... 20 MHz)
Capacitance per unit length	≤ 30 nF/km
Loop resistance	< 110 Ω/km
Core diameter	> 0.64 mm
Core cross-section	> 0.34 mm^2
Cores	Twisted double, insulated and shielded

Baud rate / length of bus cable

The length of the bus cable depends on the baud rate used:

Baud rate [kbps]	Length [m]
9.6 ... 93.75	1200
187.5	1000
500	400
1500	200
3000 ... 12000	100

Note!

The baud rate depending of the data volume, cycle time and number of nodes should only be selected as high as required for the application.

Tip!

For high baud rates we recommend to consider the application of optical fibres.

Advantages of optical fibres:

- ► Electromagnetic interferences on the transmission path remain ineffective.
- ► Bus lengths of several kilometres are also possible with higher baud rates. The bus length is
  - – independent of the baud rate.
  - – dependent on the optical fibre used.

8.3.9 PROFINET®

Identification

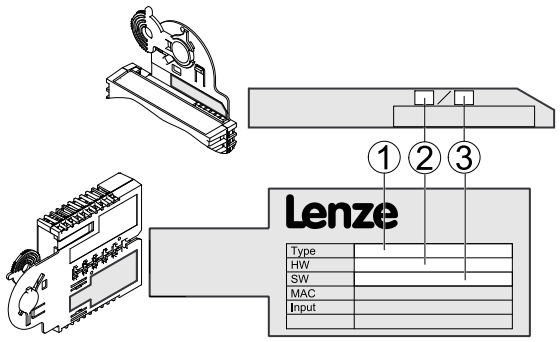

E94YCET005

	①				②	③
	E94	**A**	**Y**	**C**	**ER**	**VE**	**1.20**

Product series
Version
Module identification: extension module
Module type: communication module
PROFINET
Hardware version
Software version

Elements

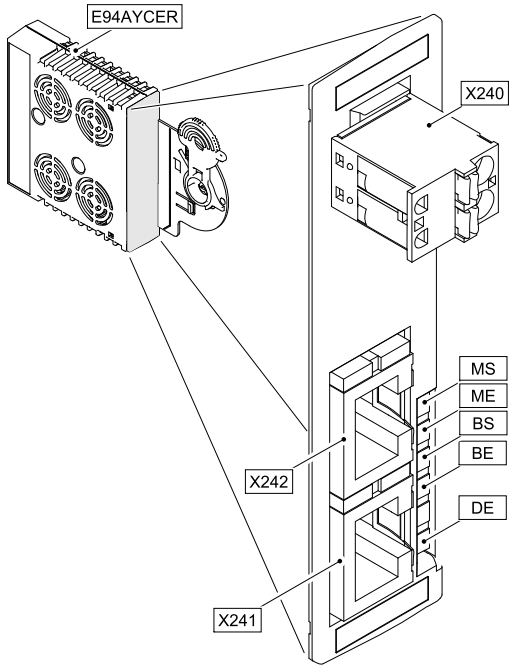

E94YCER001B

Connections

Pos.	Description
X240	Connection for the external supply of the communication module Design: Plug connector with spring connection, 2-pole
X241	PROFINET connections Design: RJ45 socket according to IEC 60603-7
X242	

Displays

LED			
Pos.	Colour	Condition	Description
MS	Green	Blinking	The communication module is supplied with voltage but has no connection to the basic device (basic device is either switched off, in the initialisation phase, or not available).
		On	The communication module is supplied with voltage and has a connection to the basic device.
ME	Red	On	There is an error in the area of the communication module.
BS	Green	Off	The PROFINET module is not active at the fieldbus.
		Blinking	The PROFINET module is in the ”Data_Exchange” state.
BE	Red	On	Bus error/trouble is active, e.g. the Ethernet cable is unplugged. (The LED is blinking in parallel to the BS LED.)
DE	Red	On	The communication module is not accepted by the basic device (see notes in the instructions for the basic device)or the standard device is not active.
Signalling on the connection X241/X242:			
-	yellow	on/blinking	Data is exchanged via PROFINET.
-	Green	On	PROFINET connection is available.

External voltage supply

Note!

In the case of an external voltage supply and for greater distances between the control cabinets, always use a separate power supply unit (SELV/PELV) that is safely separated in accordance with EN 61800-5-1 in each control cabinet.

The external voltage supply of the communication module is required if PROFINET communication is to remain intact in case the supply of the standard device fails.

If required, feed the communication module with a separate supply voltage via the 2-pin plug connector (X240).

Designation	Explanation
+	External voltage supply U = 24 V DC (20.4 ... 28.8 V) I = 140 mA
-	Reference potential for external voltage supply

Terminal data

Field	Values	
Electrical connection	2-pin plug connector with spring connection	
Possible connections	rigid:	
		1.5 mm² (AWG 16)
	flexible:	
	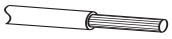	without wire end ferrule 1.5 mm² (AWG 16)
	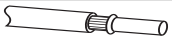	with wire end ferrule, without plastic sleeve 1.5 mm² (AWG 16)
		with wire end ferrule, with plastic sleeve 1.5 mm² (AWG 16)
Stripping length	9 mm	

Ethernet connection

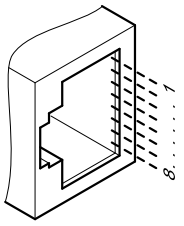

E94AYCET004C

Pin	Signal
1	Tx +
2	Tx -
3	Rx +
4	-
5	-
6	Rx -
7	-
8	-

Note!

Plug/remove the Ethernet cable plug in a straight manner (at right angles) into/from the socket to make sure that the RJ45 socket will not be damaged.

8.3.10 CANopen®

Identification

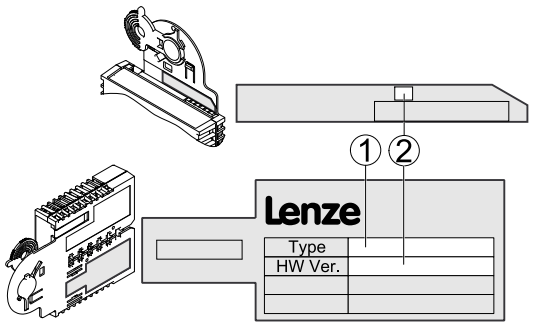

E94YCCA002

①					②
E94	A	Y	C	CA	VA

Product series
Device generation
Module identification: extension module
Module type: communication module
CANopen
Hardware version

Elements

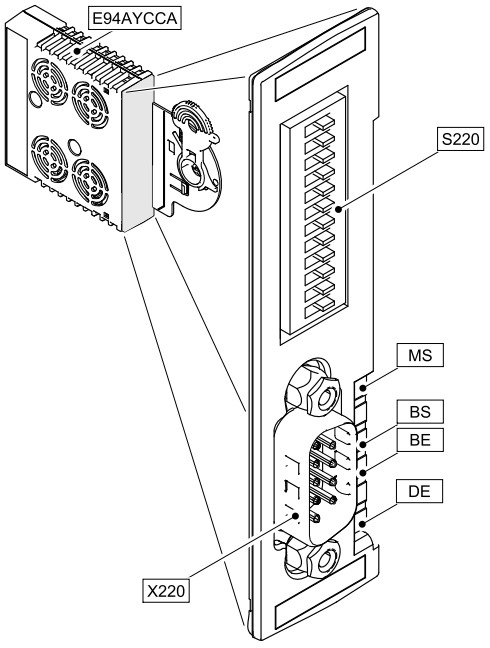

E94YCCA001B

Connections

Pos.	Description
X220	Connection for CAN Design: Sub-D plug connector, 9-pin

Displays

Pos.	Colour	Status	Description
MS	Green	On	Communication module is supplied with voltage.
DE	Red	On	The communication module is not accepted by the basic device (see notes in the Instructions for the basic device)
BS	Green	see table 📖 408; "Signalling according to DR303-3"	CANopen status ("**Z**")
BE	Red		CANopen error ("**F**")

DIP switch

Pos.	Description
A	Addressing of the bus node

Assignment of the Sub-D plug connector

Connection of the CAN to the 9-pin Sub-D plug connector, pos. "X220":

View	Pin	Designation	Explanation
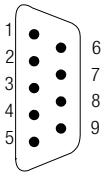	1	-	
	2	CAN_L	Signal core CAN
	3	CAN_GND	Ground CAN
	4	-	
	5	-	
	6	-	
	7	CAN_H	Signal core CAN
	8	-	
	9	-	
	Housing	CAN_Shield	Shield (connected to the housing)

Specification of the transmission cable

We recommend the use of CAN cables in accordance with ISO 11898-2:

CAN cable in accordance with ISO 11898-2	
Cable type	Paired with shielding
Impedance	120 Ω (95 ... 140 Ω)
Cable resistance/cross-section	
Cable length ≤ 300 m	≤ 70 mΩ/m / 0.25 ... 0.34 mm² (AWG22)
Cable length 301 ... 1000 m	≤ 40 mΩ/m / 0.5 mm² (AWG20)
Signal propagation delay	≤ 5 ns/m

Signalling

Status display (LED)	Explanation
Connection status to the bus with the following signalling:	
off green red	No connection to the master CANopen status ("**S**") CANopen fault ("**F**")
Constant red	**F**: bus off
Flickering	Automatic detection of the baud rate is active
Green blinking every 0.2 s	**S**: pre-operational, **F**: none
Green blinking every 0.2 s Red blinking 1 x, 1 s OFF	**S**: pre-operational, **F**: warning limit reached
Green blinking every 0.2 s Red blinking 2 x, 1 s OFF	**S**: pre-operational, **F**: node guard event
Constant green	**Z**: operational, **F**: no errors
Constant green Red blinking 1 x, 1 s OFF	**Z**: operational, error: warning limit reached
Constant green Red blinking 2 x, 1 s OFF	**Z**: operational, **F**: node guarding event
Constant green Red blinking 3 x, 1 s OFF	**Z**: operational, **F**: sync message error
Green blinking every 1 s	**Z**: stopped, **F**: no errors
Green blinking every 1 s Red blinking 1 x, 1 s OFF	**S**: stopped, **F**: warning limit reached
Green blinking every 1 s Red blinking 2 x, 1 s OFF	**S**: stopped, **F**: node guard event

Tab. 8-1 Signalling according to DR303-3

8.3.11 INTERBUS

Identification

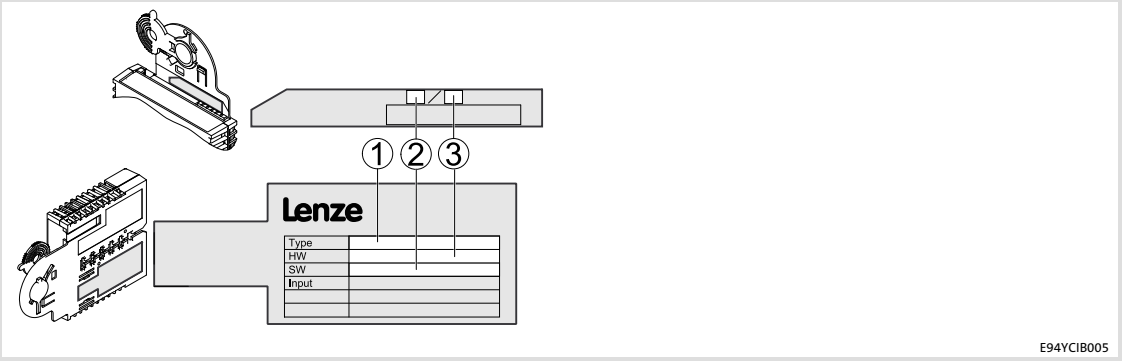

	①				②	③
	E94	**A**	**Y**	**C**	**IB**	**PA**	**01.00**
Product series							
Version							
Module code: extension module							
Module type: communication module							
INTERBUS							
Hardware version							
Software version							

Elements

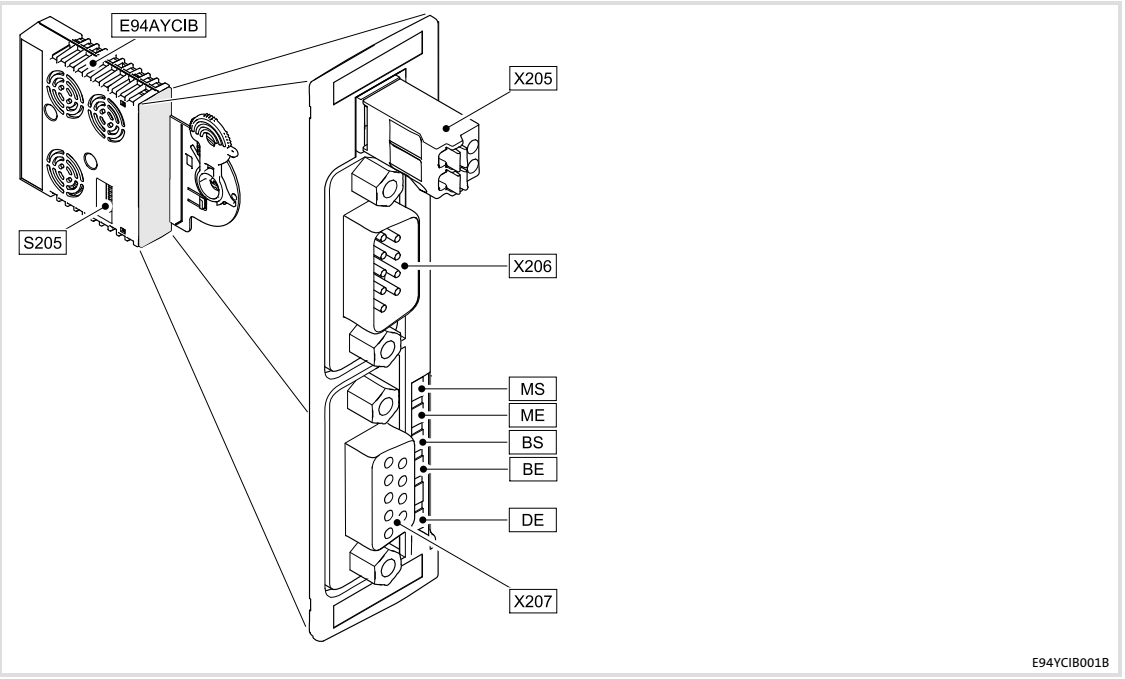

Connections

The INTERBUS is connected to the communication module by means of X206 (input, 9-pin Sub-D connector) and X207 (output, 9-pin Sub-D socket).

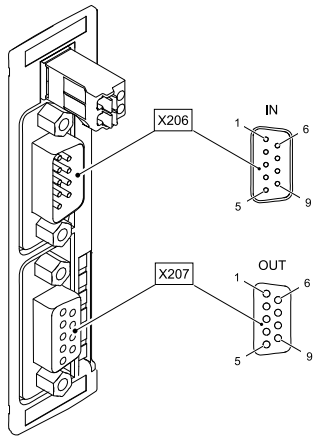

E94YCIB001C

Assignment of the 9-pin Sub-D connector X206 (IN)

Pin	Designation	Input/Output	Description
1	DO1	Input	RS485: DO1 not inverted
2	DI1	Output	RS485: DI1 not inverted
3	GND		Reference potential
4	free		not assigned
5	Vcc5	Output	5 V DC
6	/DO1	Input	RS485: DO1 inverted
7	/DI1	Output	RS485: DI1 inverted
8	Vcc5	Output	5 V DC
9	free		not assigned

Assignment of the 9-pin Sub-D socket X207 (OUT)

Pin	Designation	Input/Output	Description
1	DO2	Output	RS485: DO2 not inverted
2	DI2	Input	RS485: DI2 not inverted
3	GND		Reference potential
4	GND		
5	Vcc5	Output	5 V DC
6	/DO2	Output	RS485: DO2 inverted
7	/DI2	Input	RS485: DI2 inverted
8	Vcc5	Output	5 V DC
9	RBST	Signal input	Connection to outgoing INTERBUS plugged in.

Displays

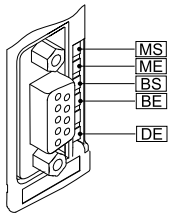

E94YCIB001F

LED			
Pos.	**Colour**	**Condition**	**Description**
MS	green	flashes	The communication module is being supplied with voltage but is not connected to the standard device. (The standard device has been switched off in the initialisation phase or does not exist.)
MS	green	on	The communication module is being supplied with voltage and is connected to the standard device.
ME	red	on	There is a fault in the area of the communication module.
BS	green	off	The communication module is not active on the field bus. Data cycles are not being executed.
		flashes	Communication via the communication module has been set up. The INTERBUS is active. Data cycles are being executed.
BE	red	flashes	Impermissible setting: ● Total number of data words (PD + PCP) > 10 ● Total number of data words (PD + PCP) = 0 The communication module has been initialised and is working internally with the following values: ● PD = 2 (words) ● PCP = 1 (word)
		on	INTERBUS communication interrupted. Data cycles are not being executed.
DE	red	on	The communication module is not accepted by the standard device (see notes in the documentation for the standard device) or the standard device is not active.

8.4 Function modules

8.4.1 Safety instructions



Danger!

Improper use of the module and the standard device may cause serious injury and property damage.

Observe the chapters ”Safety instructions” and ”Residual hazards” contained in the instructions for the standard device.



Stop!

The device contains components that can be destroyed by electrostatic discharge!

Before working on the device, the personnel must ensure that they are free of electrostatic charge by using appropriate measures.



Stop!

Before mounting/dismounting, switch off the supply voltage to prevent electronic modules from damage.

8.4.2 Mounting

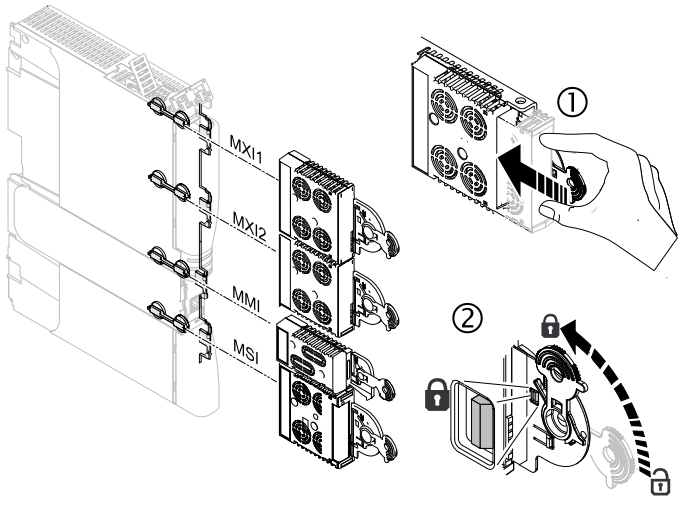

E94YCXX001G

8.4.3 Dismounting



E94AYCXX001H

8.4.4 Digital frequency

Identification

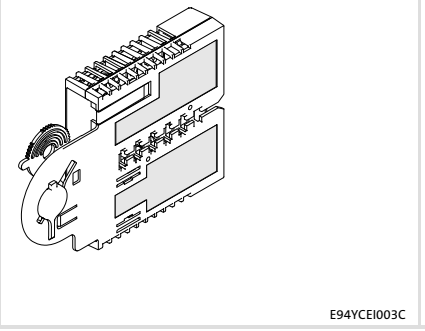

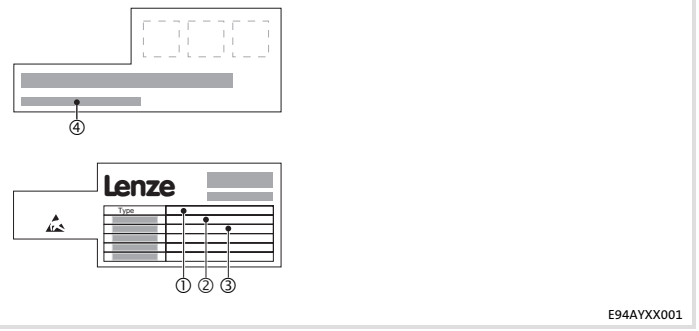

	①				②	③	④
	E94	A	Y	F	xx	xx	xx	nn

Product series
Device generation
Module identification: extension module
Module type: feedback module
Design
LF = master frequency
Hardware version

Application range

This module may be used in conjunction with basic devices of the 9400 product series as of nameplate designation

● Type	E94AxxExxxx
● HW version	VB
● SW version	04.01

Stop!

Malfunctions

If E94xxHExxx4 standard devices, firmware (SW) up to and including 04.00.21.00, are used, the output signals of the digital frequency module can be faulty.

Possible consequences:

► Damage to machines through unexpected movements of slave drives.

Protective measures:

► Only use digital frequency modules together with E94xxHExxx4 standard devices of firmware (SW) 04.01.00.00 or higher. The firmware version is indicated in parameter C00099 and on the nameplate.
Example: C00099 = 04.01.00.00 or SW nameplate data: 04.01

Elements

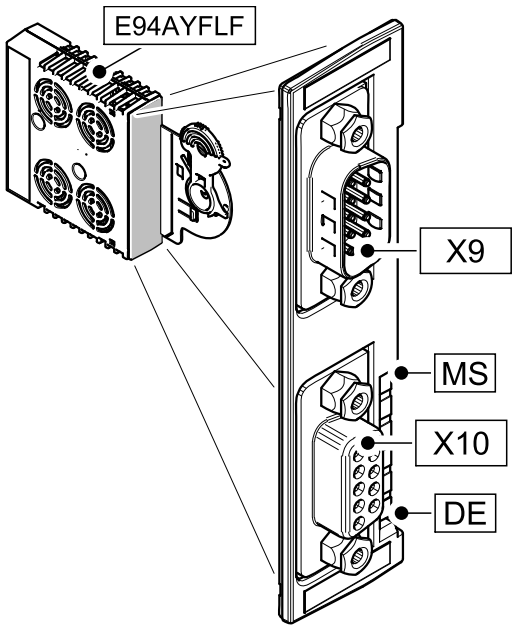

E94AYFLF004

Connections

Pos.	Description
X9	Input for digital frequency, 9-pole Sub-D plug
X10	Output for digital frequency, 9-pole Sub-D socket

Displays

Pos.	Colour	Condition	Description
MS	Green	ON	The module is supplied with voltage.
DE	Red	ON	The module is not accepted by the standard device (see notes given in the documentation for the standard device).

Note!

Only one module per basic device may be used, either in module receptacle MXI1 or MXI2.

Rated data

Logic level [V]	Inputs		Outputs	
	low	high	low	high
TTL 5 V (standard)	0 ... 0.8	2.0 ... 5.0	0 ... 0.4	2.4 ... 5.0

Functions on X9

- Input for encoder signals with TTL level
- Voltage supply +5 V for encoder
- Sensor lead (sense) at regulated voltage supply (Lenze setting)
  - max. control range of the voltage drop on the cable: 4 V (corresponds to 5 ... 9 V output voltage on X9/4)
- Digital input signal (only with regard to unused or external voltage supply)

Functions on X10

- Output for encoder signals with TTL level, directly or simulated
- Voltage supply +5 V
- Digital output signal

Assignment of the Sub-D plug connector

Stop!

The output voltages on X9/4 and on X10/4 may only be charged at a total of max. 150 mA.

If the output voltage on X9/4 is used, no digital input signal may be applied to X9/8. In this case, the cable serves as a sensor lead. In case of a connection error, the components connected to X9 are damaged.

Stop!

The output voltages on X9/4 and on X10/4 may not be interconnected. This applies to both the wiring of several modules and to the wiring of one module (e. g. for purposes of simulation).

Use system cables not connecting pin 4 for this applications only.

Tip!

We recommend the use of Lenze system cables. For this purpose, please read the documentation for the basic device.

X9	Pin	Designation	Explanation
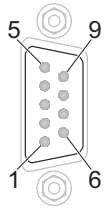 SUBD09010	1	B	TTL input signal by encoder or encoder simulation
	2	$\overline{A}$	
	3	A	
	4	+5 V	Regulated voltage supply for encoder (pin 8 = sense must be used, max. control range 5 ... 9 V)
	5	GND	-
	6	$\overline{Z}$	TTL input signal by encoder or encoder simulation
	7	Z	
	8	● **S** ● Lc ● E	The function of this cable has to be set in the basic device: ● **Sense** (sensor lead for voltage regulation, **Lenze setting**) ● Lamp control ● Enable
	9	$\overline{B}$	TTL input signal by encoder or encoder simulation

X10	Pin	Designation	Explanation
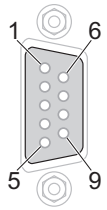 SUBD09010	1	B	TTL output signal from the encoder or encoder simulation Maximum output current: 20 mA per channel
	2	$\overline{A}$	
	3	A	
	4	+5 V	V_{CC} ±6 %
	5	GND	-
	6	$\overline{Z}$	TTL output signal from the encoder or encoder simulation Maximum output current: 20 mA per channel
	7	Z	
	8	Enable	Digital output signal
	9	$\overline{B}$	TTL output signal from the encoder or encoder simulation Maximum output current: 20 mA per channel

8.5 Memory modules

Use these modules in slot ☐ MXI1 ☐MXI2 ☑MMI ☐MSI.

8.5.1 Safety instructions

Stop!

The ⚠ symbol visible at the front indicates the presence of electronic components which can be damaged or destroyed by electrostatic discharge.

Take appropriate measures to protect these components before touching the module!

Stop!

Before mounting/dismounting, switch off the supply voltage to prevent electronic modules from damage.

8.5.2 Mounting

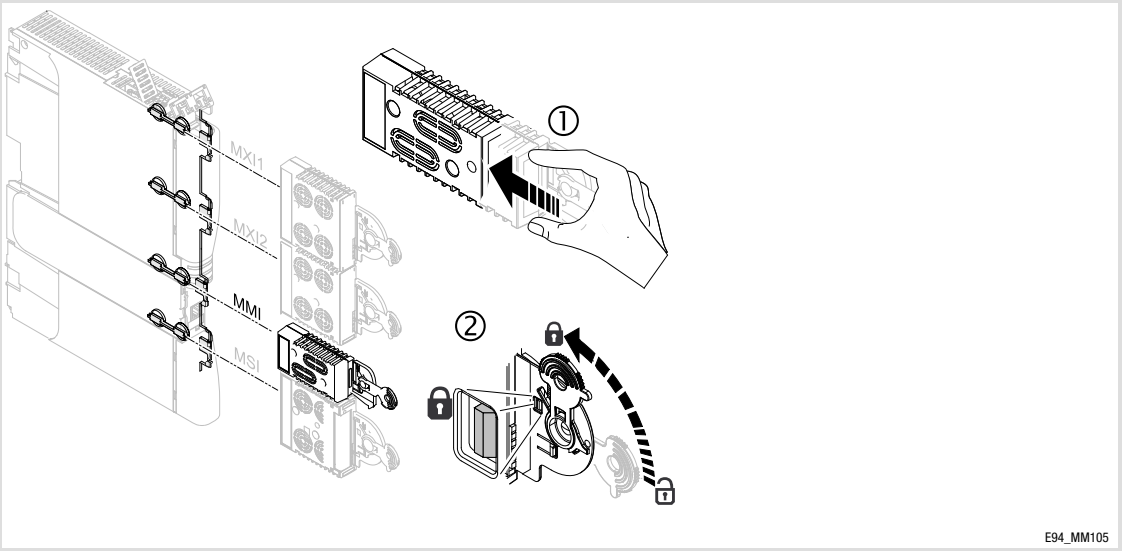

8.5.3 Dismounting

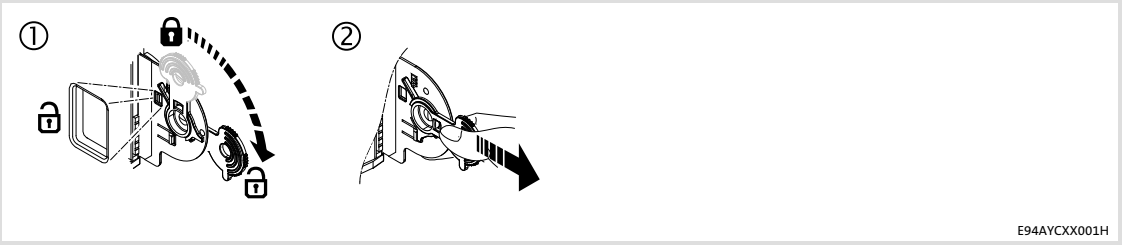

8.5.4 Setting CAN node address and baud rate

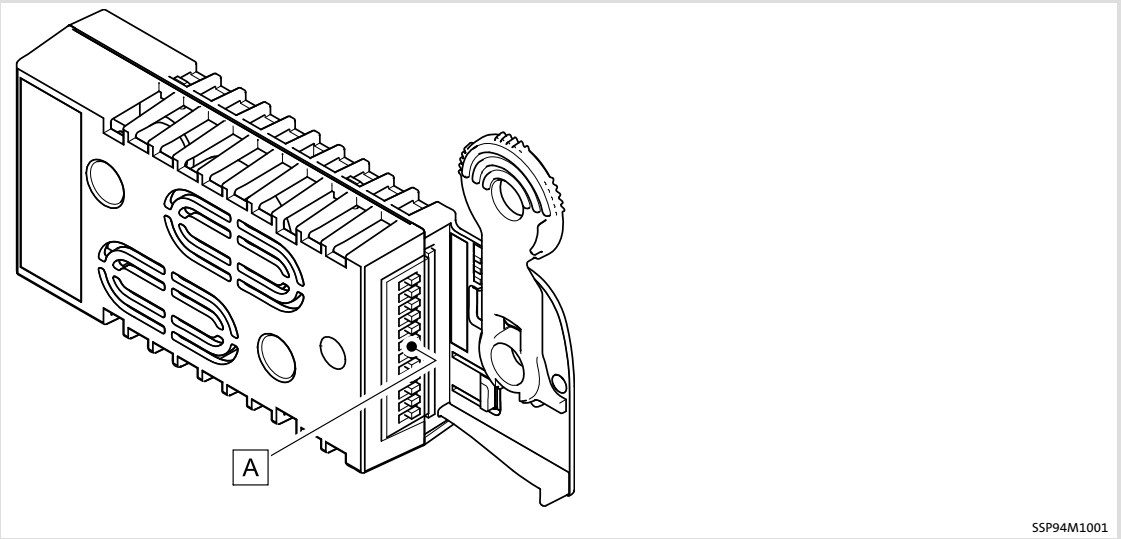

Fig. 8-1 Memory module with DIP switch (as of order designation E94AYM22)

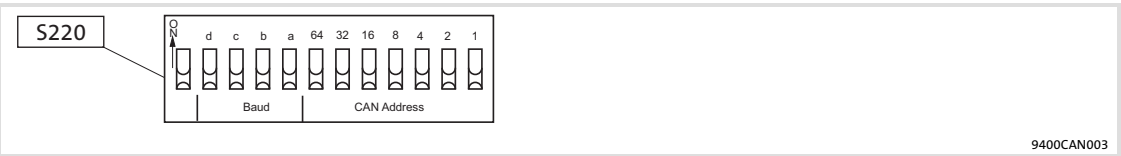

Fig. 8-2 Arrangement and labelling of the DIP switches

Via the DIP switches on the front, you can set:

- the node address (labelling ”1” ... ”64”) and
- baud rate (labelling ”a” ... ”d”)

Note!

If DIP switches 1 ... 64 = OFF (”Lenze setting”): When the standard device is switched on, the parameterisation of codes C00350 (node address) and C00351 (baud rate) is activated.

Switch the voltage supply of the standard device off and then on again to activate altered settings.

Setting the node address

The node address of the drive is calculated from the sum of all address switches in the ”ON” position.

Setting the baud rate

d	c	b	a	Baud rate
OFF	ON	ON	OFF	10 kbps
OFF	ON	OFF	ON	20 kbps
OFF	OFF	ON	ON	50 kbps
OFF	OFF	ON	OFF	125 kbps
OFF	OFF	OFF	ON	250 kbps
OFF	OFF	OFF	OFF	500 kbps
ON	ON	ON	OFF	800 kbps
OFF	ON	OFF	OFF	1000 kbps
OFF	ON	ON	ON	Automated recognition

8.5.5 Memory module MM220

Identification

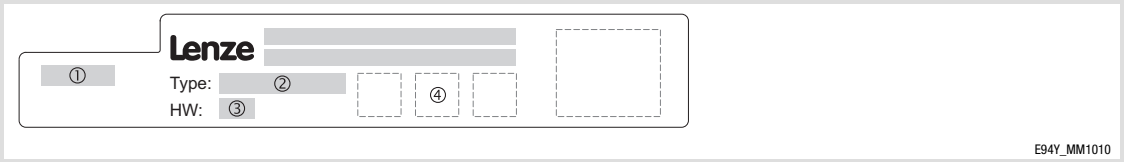

Designation ③: **MM220**

①					②
E94	**A**	**Y**	**M**	**22**	**VA**

Product range

Version

Module description: extension module

Module type: memory module

Design:
- 2 MB flash
- Possible logbook entries: 7
- DIP switch

Licence: Motion Control HighLevel

Hardware version

8.5.6 Memory module MM330

Identification

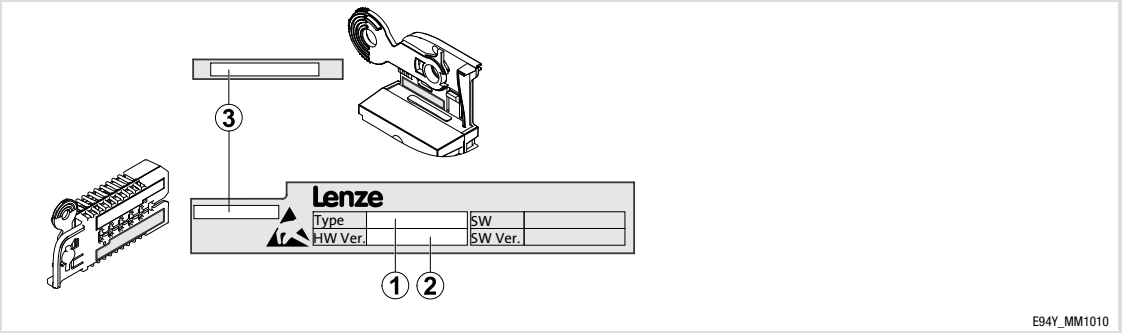

Designation ③: **MM330**

①					②
E94	**A**	**Y**	**M**	**33**	**VA**

Product range

Version

Module description: extension module

Module type: memory module

Design:
- 4 MB flash
- Possible logbook entries: 439
- DIP switch

Licence: Motion Control TopLevel

Hardware version

8.5.7 Memory module MM340

Identification

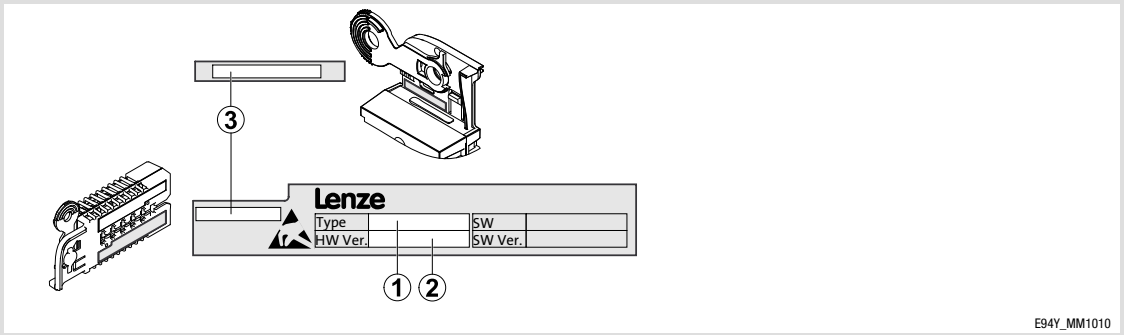

Designation ③: **MM340**

①					②
E94	**A**	**Y**	**M**	**34**	**VA**

Product range

Version

Module description: extension module

Module type: memory module

Design:
- 4 MB flash
- Possible logbook entries: 439
- DIP switch

Licence: Motion Control PLC

Hardware version

8.5.8 Memory module MM430

Identification

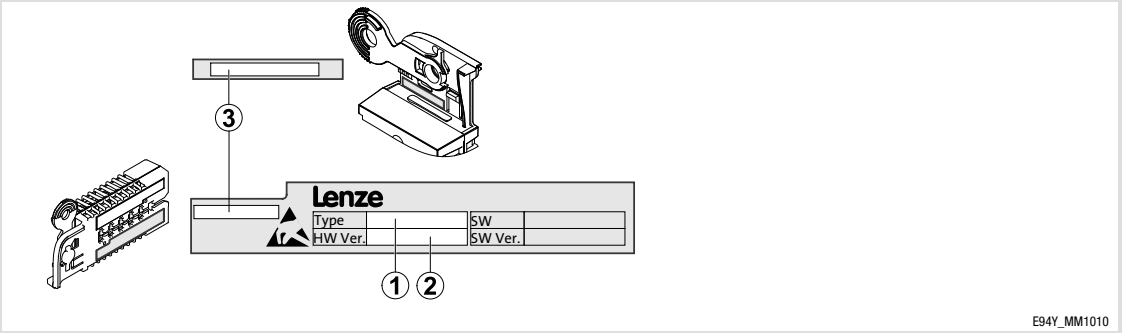

Designation ③: **MM430**

①					②
E94	**A**	**Y**	**M**	**43**	**VA**

Product range

Version

Module description: extension module

Module type: memory module

Design:
- 8 MB flash
- Possible logbook entries: 439
- DIP switch
- Real-time clock

Licence: Motion Control TopLevel

Hardware version

8.5.9 Memory module MM440

Identification

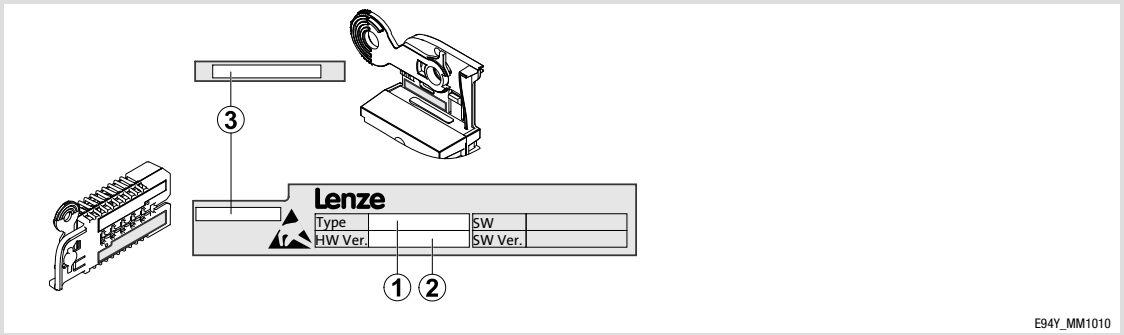

Designation ③: **MM440**

①					②
E94	**A**	**Y**	**M**	**44**	**VA**

Product range

Version

Module description: extension module

Module type: memory module

Design:
- 8 MB flash
- Possible logbook entries: 439
- DIP switch
- Real-time clock

Licence: Motion Control PLC

Hardware version

8.6 Safety modules

8.6.1 Safety instructions

Danger!

Improper use of the module and the standard device may cause serious injury and property damage.

Observe the chapters ”Safety instructions” and ”Residual hazards” contained in the instructions for the standard device.

Stop!

Mounting/dismounting must be carried out when the supply voltage is switched off to protect the electronic components against damage.

Only use safety modules in the module slot for safety modules (MSI).

Note!

The entry in code C00214 must correspond to the type of the plugged-on safety module. Otherwise, the controller will report the following error: ”Safety module: Incompatible to setting in C00214”.

8.6.2 Identification

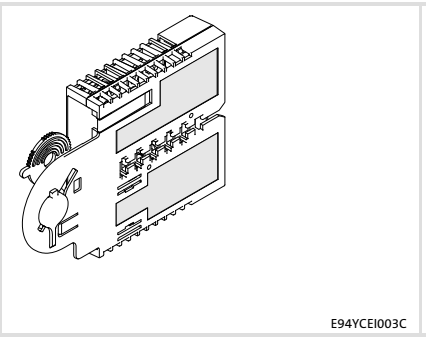

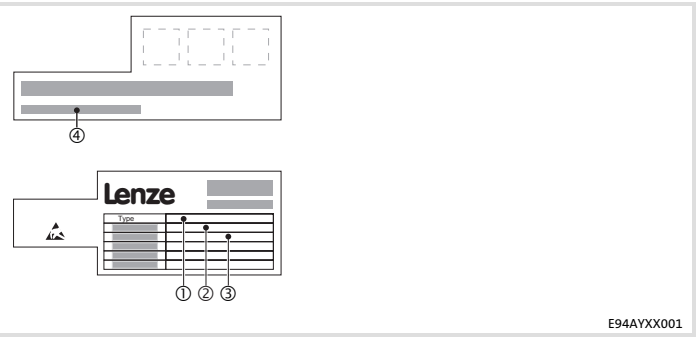

①					②	③	④
E94	A	Y	A	x	xx	xx	nn

Product series

Version

Module identification: Device module

Module type: Safety module

Design
A = SM0
B = SM100
E = SM301
F = SM302

Hardware version

Software version (SM30x only)

Serial number

8.6.3 Mounting

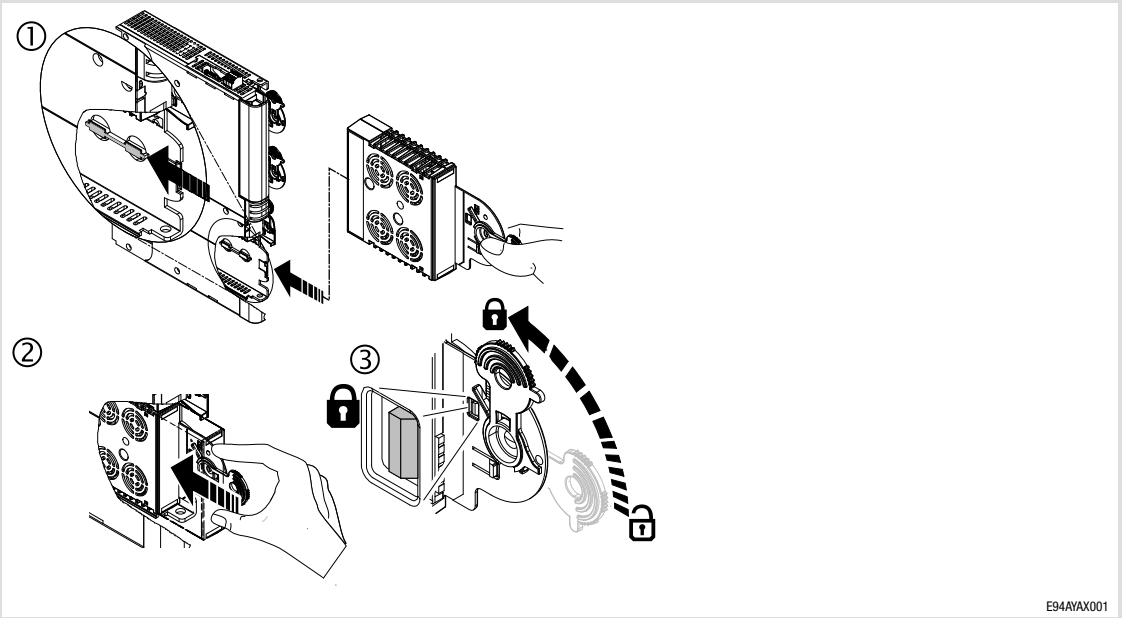

8.6.4 Dismounting

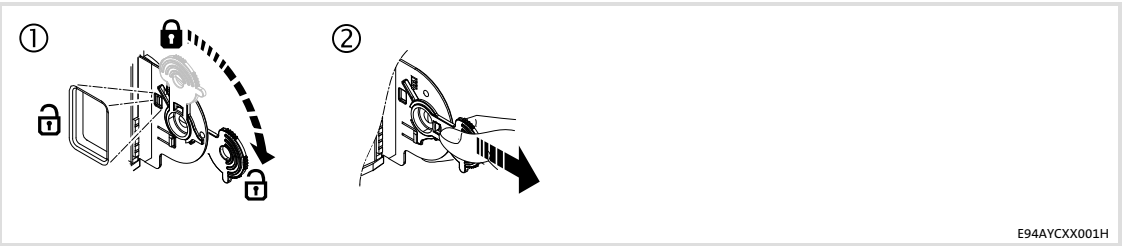

8.6.5 SM0

Elements

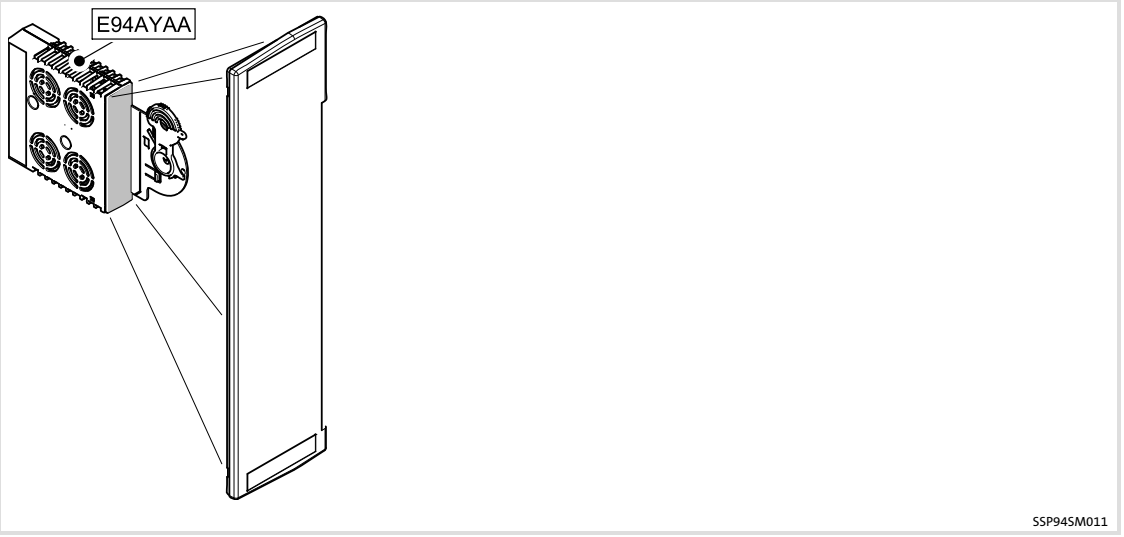

Pos.	Description
-	There are no elements.

Function

- **No**safety functions are available.
- This module is necessary for operation of the drive controller without safety functions.

Note!

If safety functions are necessary, replace the SM0 module with a module with safety functions (SM100, SM301 oder SM302).

8.6.6 SM100

Elements

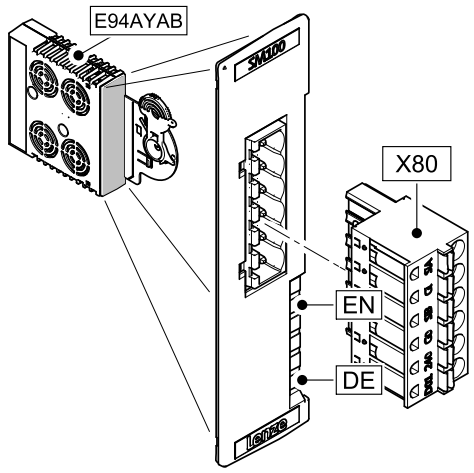

Connections

Pos.	Description
X80	Pluggable terminal strip for input and output signals

Displays

Pos.	Colour	Condition	Description
EN	Yellow	On	Controller enabled
		Off	Non-safe display "Safe pulse inhibit"
DE	Red	On	The module is not accepted by the standard device (see notes given in the documentation for the standard device).

Application range

This accessory component may only be used in conjunction with

► E94xxxExxxx axis module

as of nameplate data

	HW	SW
E94xxxExxxx	VA	1.10

Safety instructions

Danger!

If the request for the safety function is cancelled, the drive will restart automatically.

You must provide external measures which ensure that the drive only restarts after a confirmation (EN 60204).

Danger!

Unexpected motor rotation possible

In the event of a short-circuit between two power transistors, a residual movement of the motor of up to 180 °/number of pole pairs may occur!
(Example.: 4-pole motor ⇒ residual movement max. 180 °/2 = 90 °)

Possible consequences:

► People may be injured by the machine movements (unexpected start-up).

Protective measures:

► The residual movement must be considered in the risk analysis, e.g. safe torque off for main spindle drives.

Warnings!

► Secondary circuit shall supplied from an external isolating source.

► Maximum surrounding air temperature: 55 °C.

Avertissement !

- ► Prévoir un circuit auxiliaire alimenté par une source de tension avec isolation galvanique.
- ► Température ambiante maximale : 55 °C.

Function

► Safe torque off
(previously: safe standstill, protection against unexpected start-up)

Technical data

Rated data input (sensor)

Type	Voltage U_N [V]	Current I_{max} [A]
E94AYAB - SM100	24	0.9

Rated data output (feedback)

Type	Voltage U_N [V]	Current I_{max} [A]
E94AYAB - SM100	24	0.7

Block diagram



SM100	Safety module
SIA, SIB, GI	Two-channel sensor signal connections, supply through safely separated power supply unit (SELV/PELV)
	(old labelling up to HW version VB: SI1, SI2, GI)
24O, DO1, GO	Non-safe feedback connections, supply through safely separated power supply unit (SELV/PELV)
µC	Microcontroller
PWM	Pulse width modulation

Connection data

X80	Marking	Description	Electrical data
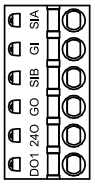 SSP9400X80	SIA	Input first shutdown path	SIA: I_{typ} = 160 mA
	GI	GND potential for SIA/SIB	LOW: -3 ... 5 V, HIGH: 15 ... 30 V,
	SIB	Input second shutdown path	SIB: I_{typ} = 28 mA Supply through safely separated power supply unit (SELV/PELV)
	GO	GND potential feedback	24 V, max. 0.7 A, short-circuit-proof, LOW-active, Supply through safely separated power supply unit (SELV/PELV)
	24O	24 V supply feedback	
	DO1	Non-safe signalling output: "Safe pulse inhibit"	

Terminal data				
	Conductor cross-section		Tightening torque	
	[mm²]	[AWG]	[Nm]	[lb-in]
Rigid	0.2 ... 2.5	24 ... 12	Spring terminal	
Wire end ferrule, insulated	0.2 ... 1.5	24 ... 16		
Twin wire end ferrule	0.5 ... 1.0	20 ... 18		

Stripping length / contact length: 10 mm

Information for the exchange of modules of different hardware versions		
up to HW: VB	from HW: VC	Comment
SI1	SIA	The exchange of the spring terminal is required!
GI	GI	
SI2	SIB	
GO	GO	
24O	24O	
DO1	DO1	

8.6.7 SM301

Elements

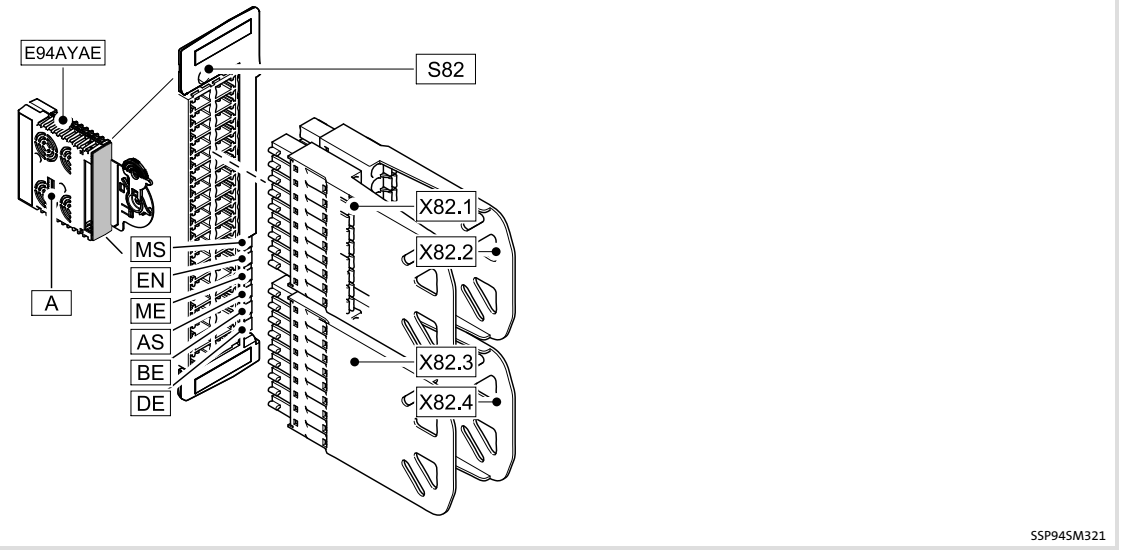

Pos.	Description
A	Safety address switch (in the left part of the housing)
S82	Module switch for parameter set adoption from the memory module
X82.1	Plug-in terminal strips for input and output signals
X82.2	
X82.3	
X82.4	

Displays

Pos.	Colour	State	Description
MS (Module State)	Green	On	Drive-based safety has initialised without a fault.
		Blinking	Drive-based safety has initialised without a fault. Internal communication to the standard device is not possible.
		Flashing	Drive-based safety is in service status. For exiting, parameterise the drive-based safety.
		Off	Drive-based safety is not initialised. Acknowledgement is not possible.
EN (Enable)	Yellow	On	Controller enabled
		Off	Non-safe display "STO"
ME (Module Error)	Red	On	System error
		Blinking	Trouble
		Flashing	Warning
		Off	Error-free operation
AS (Acknowledge Stop)	Yellow	On	Request of an acknowledgement for the restart or the parameter set adoption
		Blinking	SS1/STO active
		Flashing	SS2/SOS active
		Off	No stop function active
BE (Bus Error)	Red	On	Safety bus error: ● Communication is not possible. ● Acknowledgement is possible.
		Blinking	Safety bus error: no valid configuration.
		Off	Safety bus: error-free operation.
DE (Drive Error)	Red	On	Drive-based safety is not accepted by the standard device (see notes in the instructions for the standard device).
		Off	Drive-based safety is correctly recognised by the standard device.

Blinking: on/off every 0.5 s Flashing: on/off every 0.1/0.9 s

Application range

The use of this module is permissible with standard devices of the 9400 product series from nameplate designation

Type	HW	SW
E94xxHExxxx	VA	01.49
E94AxPExxxx	2A	02.xx

The use of this module is permissible with the PROFIBUS communication module from nameplate designation

Type	HW	SW
E94AYCPM	VB	01.10

Safety instructions

Danger!

When the request for the safety function is deactivated, the drive can restart automatically. The behaviour can be set via the parameter ”Restart behaviour” (C15300/1/2).

In the case of an automatic restart, you must provide external measures which ensure that the drive only restarts after an acknowledgement (EN 60204).

Danger!

Danger to life through improper installation

Improper installation of the safety engineering systems can cause anuncontrolled starting action of the drives.

Possible consequences:

► Death or severe injuries

Protective measures:

Total cable length between X82 and its connected components (e.g. sensors, devices, ...) > 3 m:

► Up to HW version 1A, a shielded laying system must be used for the cable between X82 and its connected components:
  – The shield must at least cover the shield connection at the installation backplane.
  – The shield should also cover the connected component if possible.

► From HW version 1A onwards, unshielded wiring is permissible.

Total cable length between X82 and its connected components (e.g. sensors, devices, ...) < 3 m:

► Unshielded wiring is permissible.

Warnings!

► Secondary circuit shall supplied from an external isolating source.

► Maximum surrounding air temperature: 55 °C.

Avertissement !

- ► Prévoir un circuit auxiliaire alimenté par une source de tension avec isolation galvanique.
- ► Température ambiante maximale : 55 °C.

Technical data

If safety functions with SM301, which require reliable speed and position detection, are used, the cable length for motor and feedback must be restricted to 100 m. In addition, the maximum permissible cable lengths in relation to the drive controllers must be adhered to (c.f. respective chapter ”General data”).

The module and the safe output must be supplied with 24 V from safely separated power supply units. If electrical isolation is required, separate voltage supply lines must be used.

Detailed features of the 24-V supply					
Terminal	Specification	[Unit]	min.	typ.	max.
+, -	Supply voltage of the module via a safely separated power supply unit (SELV/PELV)	[V]	19,2	24	30
	Input current	[mA]			350
24O, GO	Supply voltage of the safe output via a safely separated power supply unit (SELV/PELV)	[V]	18	24	30
	Input current	[mA]			1100

If the voltage of the SELV/PELV power supply unit can exceed 30 V in the event of an error, provide for an external fuse (📖 8.7.3).

Functions from SM301 V1.0 onwards

- Safe torque off (STO)
  (formerly: safe standstill, protection against unexpected start-up)
- Safe stop 1 (SS1)
- Safe stop 2 (SS2) - see SOS
- Safe stop emergency (SSE)
- Safe operational stop (SOS) - in accordance with EN 61800-5-2: SOS is designed with speed monitoring
- Safe maximum speed (SMS)
- Safely limited speed 1 (SLS1)
- Safe operation mode selector (OMS)
- Safe enable switch (ES)
- Safe speed monitor (SSM)
- Safe monitor (output)
- Connection of safety sensors
- Safe parameterisation
- Safety bus connection (PROFIsafe V1)

Additional functions as of SM301 V1.1

- Safely limited speed 2 (SLS2)
- Safely limited speed 3 (SLS3)
- Safely limited speed 4 (SLS4)
- Safe cascading (CAS) via SD-In4/SD-Out1
- Safety bus connection (PROFIsafe V2)

Additional functions from SM301 V1.2

- Parameterisable response time of encoder monitoring

Additional functions from SM301 V1.3

- Safe operational stop (SOS) - compliant with EN 61800-5-2: SOS is designed with position monitoring
- Safe direction (SDI)
- Safe speed measurement and position detection with resolver using a motor encoder and an additional position encoder (two-encoder-concept)

Additional functions as of SM301 V1.4

- Safely limited increment (SLI)
- Safely monitored brake ramp for SS1/SS2
- Safe speed and position detection with resolver selected as the motor encoder

Addressing

The safety address serves to clearly assign the safety modules of the SM301 type in systems with several drives. The address ”0” is not permissible.

Address switch

The safety address can be set in the left part of the housing by means of the DIP switch A. For setting the switch, use an appropriately small tool, e. g. a probe. The switch can only be set if the module is not connected to a standard device. Via the switch, addresses in the range of 0 ... 1023 can be set. Alterations by the switch with regard to the address are only activated when the 24-V supply is switched on. The address setting ”0” requires the setting by the address code.

DIP switch A	Labelling									
	1	2	3	4	5	6	7	8	9	0
Value of the address bit	1	2	4	8	16	32	64	128	256	512

Note!

In the SM301 safety module as of version VA 1.xx, the address 0 is replaced as follows:

- ► With the address saved in the safety module in the parameter ”Safety address” (C15111).
- ► If the address 0 canot be replaced, the module reports an error.

Block diagram

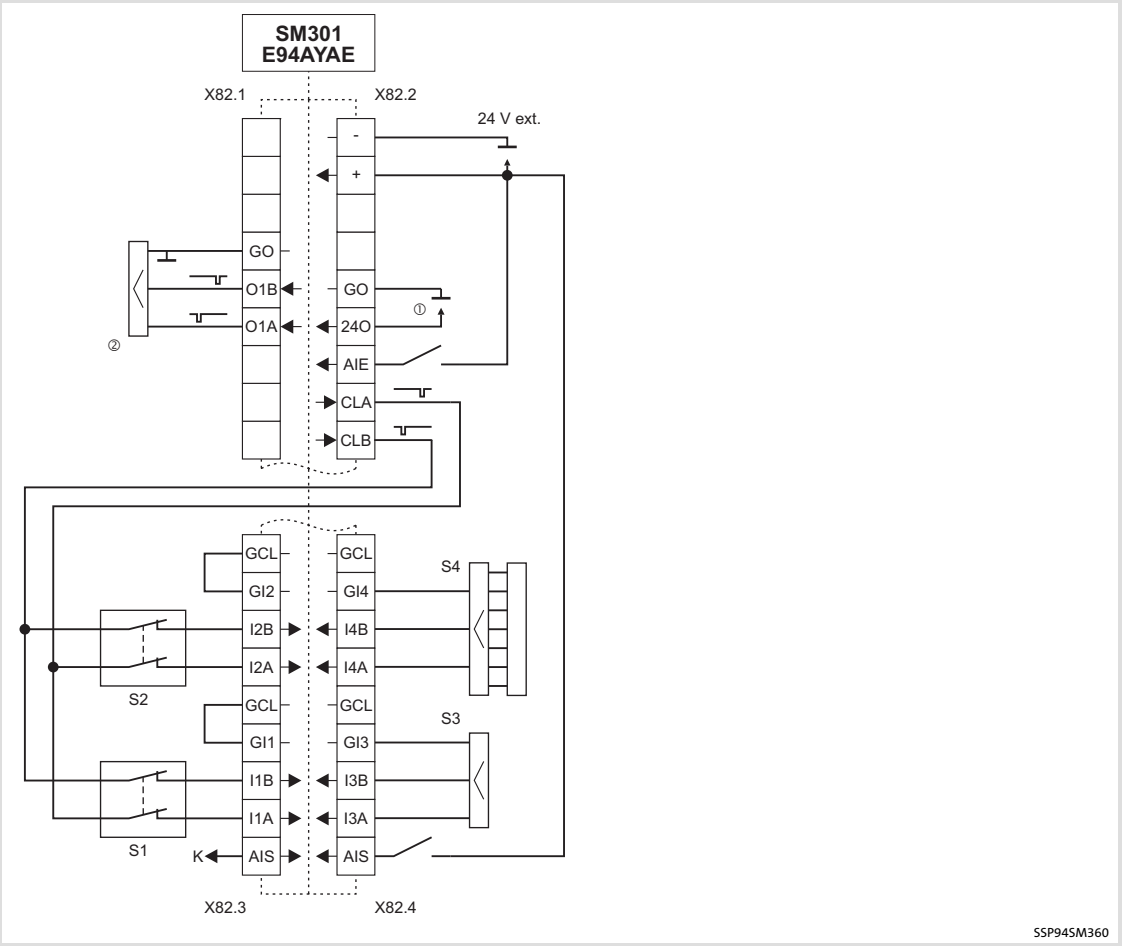

Fig. 8-3 Wiring example

E94AYAF	SM302 safety module
S1 S2	Passive sensor with channel A and B
S3	higher-level safety control (active sensor)
S4	lightgrid (active sensor)
24 V ext.	24-V voltage supply of the module (SELV/PELV)
①	24-V voltage supply of the output (SELV/PELV)
②	safe output to higher-level safety control
K	to AIS of the next module

Connection data

Note!

Provide for a sufficient strain relief, so that the terminals are not pulled from the plug connectors, in particular when you use rigid cables.

Cable cross-sections and tightening torques				
Type	**[mm²]**	**[Nm]**	**AWG**	**[lb-in]**
Wire end ferrule, insulated	0.25 ... 0.75	Spring terminal	24 ... 18	Spring terminal
Rigid	0.14 ... 1.5		26 ... 16	

Stripping length or contact length: 9 mm

X82.1	Labelling	Description
		This part of the terminal strip is not assigned.
	GO	GND SD-Out1
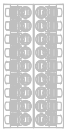	O1B	Safe monitor SD-Out1, channel B
	O1A	Safe monitor SD-Out1, channel A
		This part of the terminal strip is not assigned.

X82.2	Labelling	Description
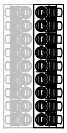	-	GND external supply
	+	+24 V external supply via a safely separated power supply unit (SELV/PELV)
	GIR	This part of the terminal strip is reserved.
	RI1	
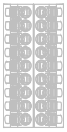	GO	GND 24O
	24O	+24 V external supply for the safe monitor SD-Out1 (SELV/PELV)
	AIE	Error acknowledgement input (”Acknowledge In Error”)
	CLA	Clock output for passive sensors, channel A (Clock A)
	CLB	Clock output for passive sensors, channel B (Clock B)

X82.3	Labelling	Description
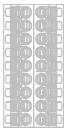	GCL	GND clock output
	GI2	GND SD-In2
	I2B	Sensor input SD-In2, channel B
	I2A	Sensor input SD-In2, channel A
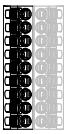	GCL	GND clock output
	GI1	GND SD-In1
	I1B	Sensor input SD-In1, channel B
	I1A	Sensor input SD-In1, channel A
	AIS	Restart acknowledgement input (”Acknowledge In Stop”, 1-channel, bridged to X82.4/AIS)

X82.4	Labelling	Description
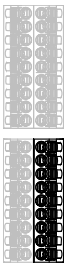	GCL	GND clock output
	GI4	GND SD-In4
	I4B	Sensor input SD-In4, channel B
	I4A	Sensor input SD-In4, channel A
	GCL	GND clock output
	GI3	GND SD-In3
	I3B	Sensor input SD-In3, channel B
	I3A	Sensor input SD-In3, channel A
	AIS	Restart acknowledgement input (”Acknowledge In Stop”, 1-channel, bridged to X82.3/AIS)

8.6.8 SM302

Available for delivery soon with extended functions compared to SM301.

Warnings!

Secondary circuit shall supplied from an external isolating source.
Applicable if supplied by an external source.

► Maximum surrounding air temperature: 55 °C.
► External fuse for 24 Vdc supply voltage. Rated 4 A DC fuse UL248-14.

8.7 Motor holding brake control modules

8.7.1 Overview

The motor brake control modules differ in the following features:

- Rated voltage
- Device size assignment
- Mounting type

The table shows the module/controller assignments according to the features listed.

Single-axis controllers		Rated voltage of motor holding brake (control module)		
Type		24 V	205 V	180 V
E94xSxE0024 ... E94xSxE0244	GG1 ... GG3	E94AZHX0051 ① ③ E94AZHA0051 ① ④	E94AZHN0025 ④ ⑤	E94AZHN0026 ④ ⑤
E94xSxE0324 ... E94xSxE1044	GG6 ... GG7	E94AZHY0101 ② ③ E94AZHB0101 ② ④	E94AZHN0025 ④ ⑤ E94AZHY0025 ② ③	E94AZHN0026 ④ ⑤ E94AZHY0026 ② ③
E94BSxE1454 ... E94BSxE4604	GG81 ... GG91	E94AZHY0101 ② ③ E94AZHB0101 ② ④	E94AZHN0025 ④ ⑤ E94AZHY0025 ② ③	E94AZHN0026 ④ ⑤ E94AZHY0026 ② ③
Multi-axis controllers		Rated voltage of motor holding brake (control module)		
Type		24 V	205 V	180 V
E94xMxE0024 ... E94xMxE0324	GG1 ... GG3	E94AZHX0051 ① ③	E94AZHN0025 ④ ⑤	E94AZHN0026 ④ ⑤
E94xMxE0474 ... E94xMxE0594	GG6	E94AZHY0101 ② ③ E94AZHB0101 ② ④	E94AZHN0025 ④ ⑤ E94AZHY0025 ② ③	E94AZHN0026 ④ ⑤ E94AZHY0026 ② ③

Tab. 8-2 Motor holding brake/control module assignment

GGx	Device size
①	integrated in the installation backplane, already used or retrofittable
②	integrated in the device, already applied or retrofittable (recommended variant for the same rated voltage)
③	integrated control module (automatic brake operation can be activated)
④	external control (via digital output/digital input)
⑤	external mounting (DIN rail or mounting plate)

The information applicable to all modules is provided in advance.

The information applicable to the individual modules is provided afterwards:

- ► E94AZHX0051 - (📖 455)
- ► E94AZHA0051 - (📖 460)
- ► E94AZHY0101 - (📖 466)
- ► E94AZHB0101 - (📖 473)
- ► E94AZHY0025 - (📖 480)
- ► E94AZHN0025 - (📖 485)
- ► E94AZHY0026 - (📖 491)
- ► E94AZHN0026 - (📖 497)

Monitoring functions

Motor brake control module		
Brake status	**Module-internal monitoring**	**No monitoring**
Brake is not controlled (brake is applied)	● Supply voltage of brake – not available – not connected correctly	● Supply voltage – too high – too low – e.g. 18 V instead of 24 V ● Brake current – too high – too low ● Brake cable not connected correctly
Brake is controlled (brake is released)	● Short circuits – cable "+" or "-" – cable "BD1" or "BD2" ● Open circuit – cable "+" or "-" – cable "BD1" or "BD2"	

► Single Drive E94xS... devices: Monitoring active from $V_{DC\ bus}$ > 250 V

► Multi Drive E94xM... devices: Monitoring active independent of $V_{DC\ bus}$

$V_{DC\ bus}$ = DC-bus voltage

► Errors can be evaluated under code C02609/8.

The externally controllable E94AZHN002x modules can be monitored via the digital output (recommended).

Digital output DO	
Status	Description
HIGH	No faults
LOW	Fault ● Supply voltage for motor holding brake is missing ● Motor holding brake not connected to power supply ● Brake cable defective – Open circuit – Short circuit ● Supply voltage for motor brake control is missing

Note!

The supply status can be reported to the standard device via the error channel. For more information, please see the software manual or the online help (see description of C02609/8).

Operating conditions

The operating conditions correspond to the operating conditions for the standard device to which the DC-feeding point is connected.

Electrical isolation / protection against accidental contact

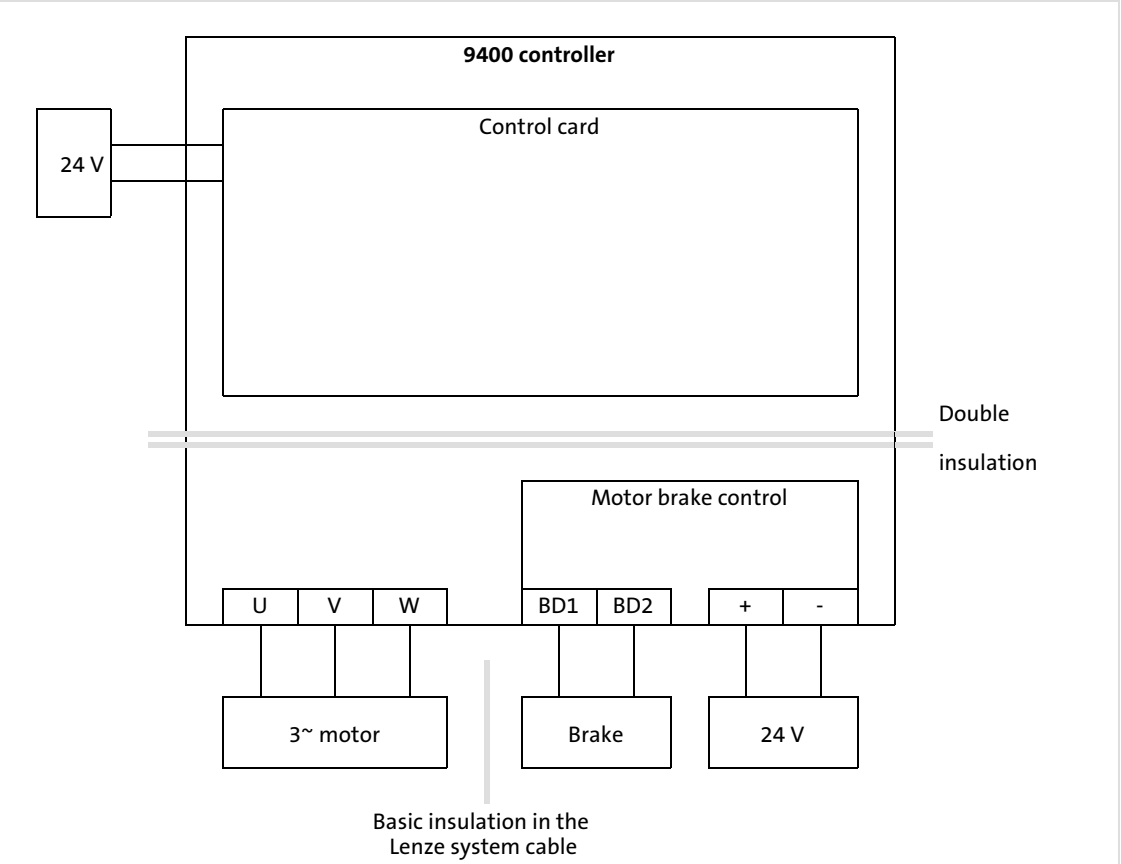

The principle of electrical isolation can be analogously transferred to the modules with other voltages for motor holding brakes.

8.7.2 Safety instructions

During installation the notes given in the documentation for the standard device must be observed!

Danger!

Dangerous electrical voltage!

Dangerous electrical voltages may be applied to the connections of the brake switch.

Possible consequences:

► Death or severe injuries when touching the terminals.

Protective measures:

► Disconnect the standard device and the brake switch from the mains before carrying out any operations.

► Check that all power terminals are deenergised.

Stop!

The motor brake control includes an electronic switch which can control a motor holding brake.

The motor brake control module may only be connected to holding brakes which correspond to the permissible data specified in the technical data.

If the permissible values specified in the technical data are not complied with:

► The motor brake control module can be destroyed.

► A safe operation of the motor holding brake cannot be guaranteed.

Further notes in the documentation of the standard device must be observed!

Stop!

Requirements on the brake cable (connection BD1/BD2):

► If the brake cable is part of the motor cable, it must be shielded.
  – An operation with unshielded brake cables can destroy the motor brake control module.
  – We recommend the use of Lenze system cables (motor cable with separately shielded additional cores).
  – Connect the shield to PE on both sides.

► When using a permanent magnet holding brake, ensure the correct polarity of the brake cable.
  – If the terminals are reversed, the brake does not release. Since the motor runs against the closed brake, the brake can be destroyed.

8.7.3 Safety instructions for the installation according to UL/CSA

Original - English

E94AZHX0051, E94AZHA0051

Warnings!

- Only for use with series E94.
- Secondary circuit shall supplied from an external isolating source.
- Load at ”Brake Output” is provided for ”dc pilot duty”.
- The voltage rating of the fuses must at least be suitable for the input voltage of the device.
- Use 60/75 °C wire, except for control circuits.
- Maximum surrounding air temperature: 55 °C.
- These products are intended for use in a pollution degree 2 environment.

E94AZHY0101, E94AZHA0101, E94AZHY0025, E94AZHN0025, E94AZHY0026, E94AZHN0026

Warnings!

- Only for use with series E94.
- Secondary circuit shall supplied from an external isolating source.
- Load at ”Brake Output” is provided for ”dc pilot duty”.
- The voltage rating of the fuses must at least be suitable for the input voltage of the device.
- E94AZHx0101, E94AZHx0025:
  – Use 105 °C wire only (min. wire size 20 AWG), except for control circuits.
- E94AZHx0026:
  – Use 60/75 °C wire only (min. wire size 20 AWG), except for control circuits.
- Maximum surrounding air temperature: 55 °C.
- These products are intended for use in a pollution degree 2 environment.

	Branch circuit/short circuit protection with fuses in accordance with UL248
Type	Fuse [A]
E94AZHX0051	7.5
E94AZHA0051	7.5
E94AZHY0101	7.5
E94AZHB0101	7.5
E94AZHY0025	5
E94AZHN0025	5
E94AZHY0026	5
E94AZHN0026	5

Original - French

E94AZHX0051, E94AZHA0051

Avertissement !

- ► Equipement destiné uniquement à être utilisé avec la série E94.
- ► Prévoir un circuit auxiliaire alimenté par une source de tension avec isolation galvanique.
- ► Charge côté ”sortie du frein” fournie pour ”cycle pilote CC”.
- ► La tension des fusibles doit être adaptée à la tension d’entrée de l’équipement (exigence minimale).
- ► Utiliser exclusivement des conducteurs en cuivre 60/75 °C, sauf pour les circuits de commande.
- ► Température ambiante maximale : 55 °C.
- ► Ces produits sont destinés à un environnement caractérisé par le degré de pollution 2.

E94AZHY0101, E94AZHA0101, E94AZHY0025, E94AZHN0025, E94AZHY0026, E94AZHN0026

Avertissement !

- ► Equipement destiné uniquement à être utilisé avec la série E94.
- ► Prévoir un circuit auxiliaire alimenté par une source de tension avec isolation galvanique.
- ► Charge côté ”sortie du frein” fournie pour ”cycle pilote CC”.
- ► La tension des fusibles doit être adaptée à la tension d’entrée de l’équipement (exigence minimale).
- ► E94AZHx0101, E94AZHx0025:
  - – Utiliser exclusivement des conducteurs 105 °C (20 AWG minimum), sauf pour la partie commande.
- ► E94AZHx0026:
  - – Utiliser exclusivement des conducteurs 60/75 °C (20 AWG minimum), sauf pour la partie commande.
- ► Température ambiante maximale : 55 °C.
- ► Ces produits sont destinés à un environnement caractérisé par le degré de pollution 2.

	Branch circuit/short circuit protection with fuses in accordance with UL248
Type	Fuse [A]
E94AZHX0051	7.5
E94AZHA0051	7.5
E94AZHY0101	7.5
E94AZHB0101	7.5
E94AZHY0025	5
E94AZHN0025	5
E94AZHY0026	5
E94AZHN0026	5

8.7.4 Motor holding brake control module E94AZHX0051



Scope of supply

Pos.	Description
	Motor brake control E94AZHX0051
	Mounting Instructions

Elements of the motor brake control

Pos.	Description
A	Nameplate
B	Connection of the installation backplane
X107	Connection of supply and brake

Identification

Type code	①						
	E94	A	Z	H	x	005	1

Product series
Device generation
Accessories
Motor brake control type
Rated current
005 = 2.5 A
Voltage class
1 = 24 V

Standards

Conformity and approval			
Conformity			
CE	2014/35/EU	Low-Voltage Directive	
CE	2014/30/EU	EMC Directive	
EAC	TP TC 004/2011 (TR CU 004/2011)	On safety of low voltage equipment	Eurasian Conformity TR CU: Technical Regulation of Customs Union
EAC	TP TC 020/2011 (TR CU 020/2011)	Electromagnetic compatibility of technical means	Eurasian Conformity TR CU: Technical Regulation of Customs Union
Approval			
$_{C}UL_{US}$	UL61800-5-1	Industrial Control Equipment (File No. E132659) for USA	
	CSA C22.2 No. 274-13	Industrial Control Equipment (File No. E132659) for Canada	

General electrical data

EMC			
Noise emission	EN 61800-3	Conducted, category C2.	
Noise immunity	EN 61800-3	Burst on control cable:	2 kV/5 kHz
		Surge on control cable:	1 kV (1.2 µs/50 µs; control cable - PE)

Rated data

Type	Voltage U_{DC} [V]	Current I_{DC} [A]	Power P_{DC} [W]	Breaking energy E [Ws]
E94AZHX0051	18 ... 30	0.3 ... 2.5	max. 55	max. 5

Field	Values
Input voltage	DC 24 V (18 ... 30 V)
Output voltage	Corresponds to input voltage
Brake current	0.3 ... 2.5 A
Switching capacity	Max. 55 W
Breaking energy	Max. 5 Ws
Cable protection	Recommendation: 7.5 A, tripping characteristic ”B” or ”C”
Maximum cable length	In the chapter ”Electrical installation” the dependency of the cable length on the brake current and the cable cross-section is described.
Operating frequency	Max. 6/min
Operating times	Can be ignored compared to the delay time of the brake. See documentation of the brake.
Service life	> 10 millions of cycles
Protection against	
Overload	No
Short circuit of the terminals	Yes
Polarity reversal at the input	Yes
Insulation [1)]	Double insulation (EN61800-5-1: V_{rated} = 300 V AC), Separation (UL: V_{rated} = 500 V AC)

1) Brake connection against control card of the controller

Cable length

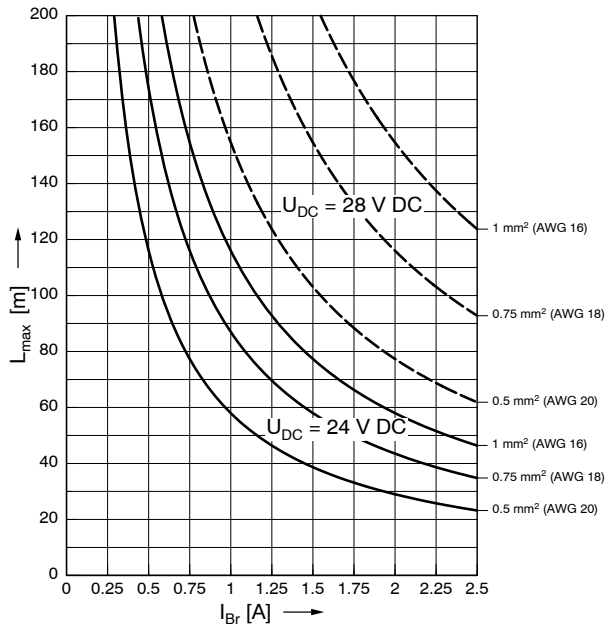

E94AZH004

L_{max}	Maximum brake cable length in [m]
I_{BR}	Brake current in [A]
U_{DC}	Supply voltage of the motor brake control

Installation steps

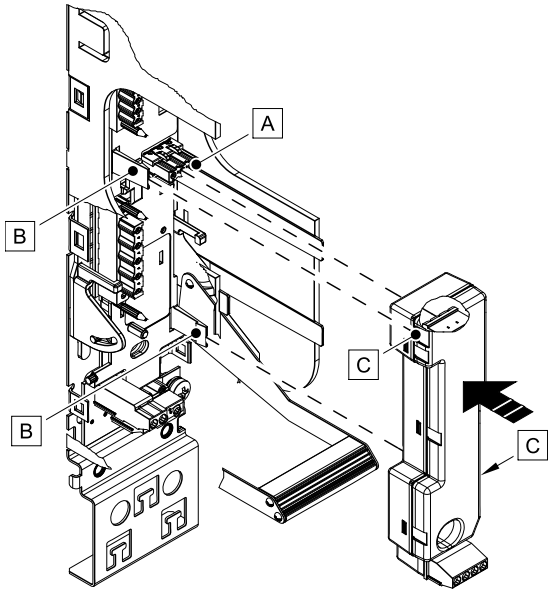

E94AZH003

1. Plug the motor brake control onto the terminal A of the installation backplane.
2. Make sure that both clips B engage in the slots C of the motor brake control.

Connection plan

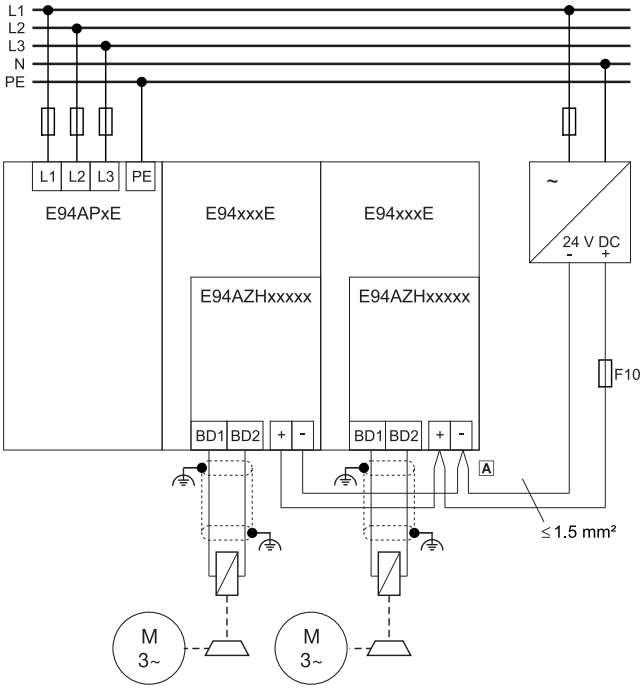

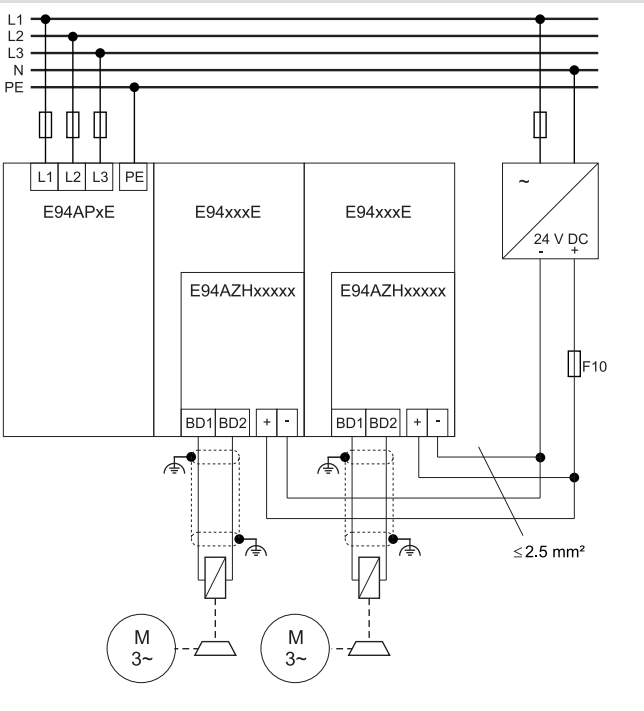

F10 Secondary cable protection. Observe the standards of the cable protection when selecting the fuse!

A Use twin wire end ferrules.

HF shield termination through large-surface PE connection

Terminal data

Terminal X107	Labelling	Description
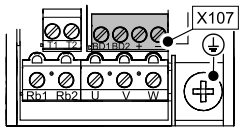 SSP940X107	BD1 BD2	Connection of the motor holding brake + (Lenze: WH) - (Lenze: BN) E94AZHX0051: 24 V DC, max. 2.5 A Observe correct polarity!
	+ / -	Supply voltage for the motor holding brake (18 ... 30 V DC) Observe correct polarity!

Note!

The supply terminals (+/-) are protected against polarity reversal.

The supply status can be reported to the basic device via the error channel. Further information can be obtained from the documentation of the basic device.

Terminal data	Conductor cross-section		Tightening torque	
	[mm²]	[AWG]	[Nm]	[lb-in]
Single core	0.25 ... 2.5	24 ... 12	0.5 ... 0.6	4.4 ... 5.3
2 conductors [1)]	0.25 ... 1.5	24 ... 16		

1) Two conductors of the same cross-section with a twin wire end ferrule

8.7.5 Motor holding brake control module E94AZHA0051

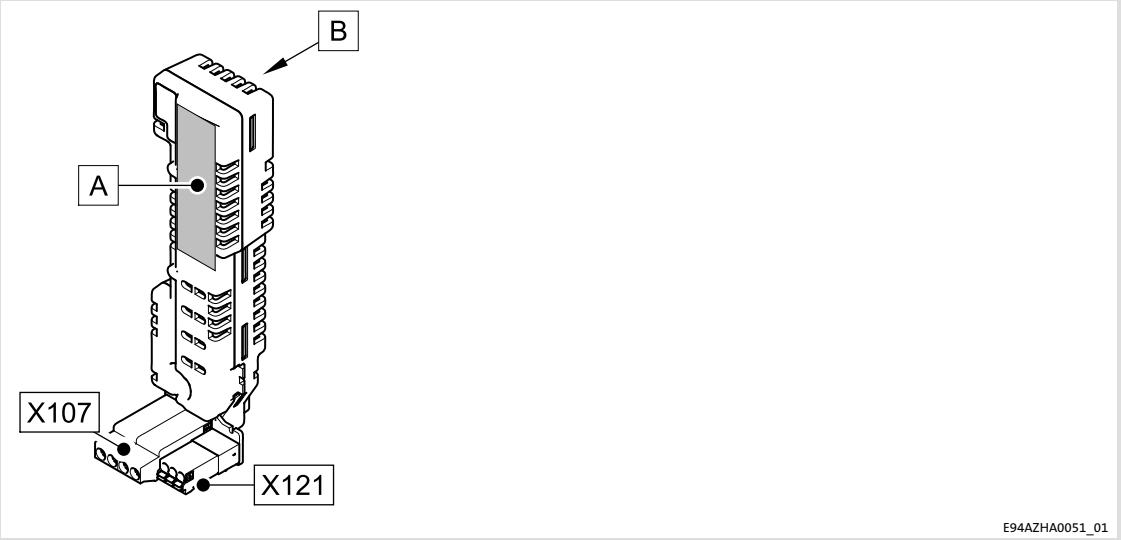

Scope of supply

Pos.	Description
	E94AZHA0051 motor brake control
	Mounting Instructions

Elements of the motor brake control

Pos.	Description
A	Nameplate
B	Terminal for the installation backplane
X107	Terminal for supply and brake
X121	Terminal for external control and feedback

Identification

Type code	①						
	E94	A	Z	H	A	005	1
Product series							
Version							
Accessories							
Type of motor brake control							
Rated current 005 = 2.5 A							
Voltage class 1 = 24 V							

Standards

Conformity and approval			
Conformity			
CE	2014/35/EU	Low-Voltage Directive	
CE	2014/30/EU	EMC Directive	
EAC	TP TC 004/2011 (TR CU 004/2011)	On safety of low voltage equipment	Eurasian Conformity TR CU: Technical Regulation of Customs Union
EAC	TP TC 020/2011 (TR CU 020/2011)	Electromagnetic compatibility of technical means	Eurasian Conformity TR CU: Technical Regulation of Customs Union
Approval			
$_{c}UL_{US}$	UL61800-5-1	Industrial Control Equipment (File No. E132659) for USA	
	CSA C22.2 No. 274-13	Industrial Control Equipment (File No. E132659) for Canada	

General electrical data

EMC			
Noise emission	EN 61800-3	Conducted, category C2.	
Noise immunity	EN 61800-3	Burst on control cable:	2 kV/5 kHz
		Surge on control cable:	1 kV (1.2 µs/50 µs; control cable - PE)

Rated data

Field	Values
Input voltage	DC 24 V (18 ... 30 V)
Output voltage	Corresponds to input voltage
Brake current	0.3 ... 2.5 A
Switching capacity	Max. 55 W
Breaking energy	Max. 5 Ws
Cable protection	Recommendation: 7.5 A, tripping characteristic ”B” or ”C”
Control input	
Input voltage	PLC input, IEC 61131-2, 24 V
Input current	Typically 15 mA
Control output	
Output voltage	PLC output, IEC 61131-2, 24 V
Output current	Typically 15 mA
Maximum cable length	In the chapter ”Electrical installation” the dependency of the cable length on the brake current and the cable cross-section is described.
Operating frequency	Max. 6/min
Operating times	Can be ignored compared to the delay time of the brake. See documentation of the brake.
Service life	> 10 millions of cycles
Protection against	
Overload	No
Short circuit of the terminals	Yes
Polarity reversal at the input	Yes
Insulation [1)]	Double insulation (EN61800-5-1: V_{rated} = 300 V AC), Separation (UL: V_{rated} = 500 V AC)

1) Brake connection against control card of the controller

Cable length

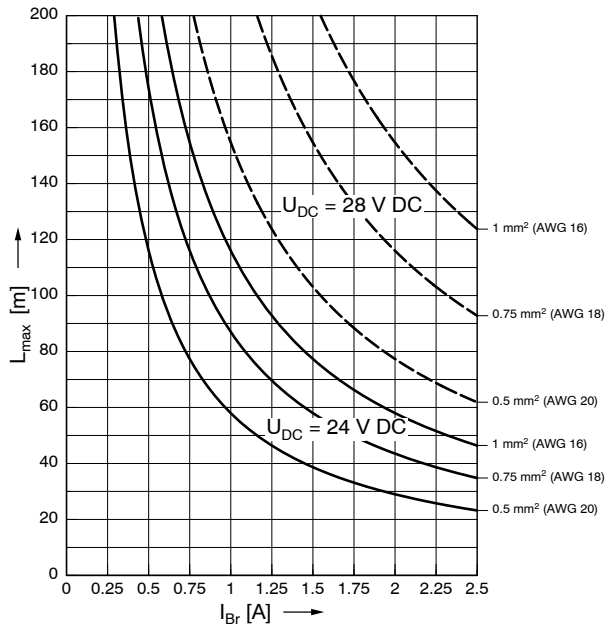

E94AZH004

L_{max}	Maximum brake cable length in [m]
I_{BR}	Brake current in [A]
U_{DC}	Supply voltage of the motor brake control

Installation steps

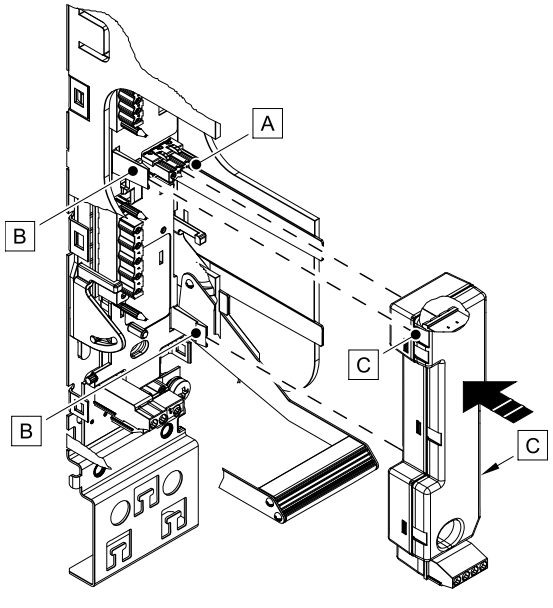

E94AZH003

1. Plug the motor brake control onto the terminal A of the installation backplane.
2. Make sure that both clips B engage in the slots C of the motor brake control.

Connection plan

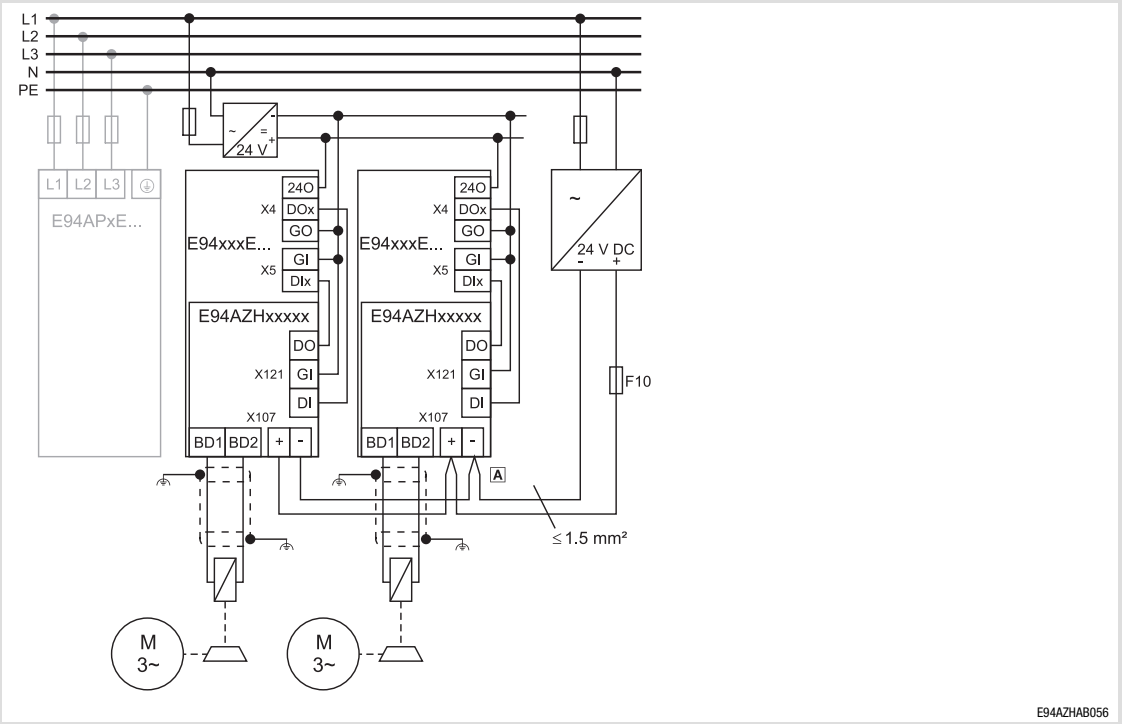

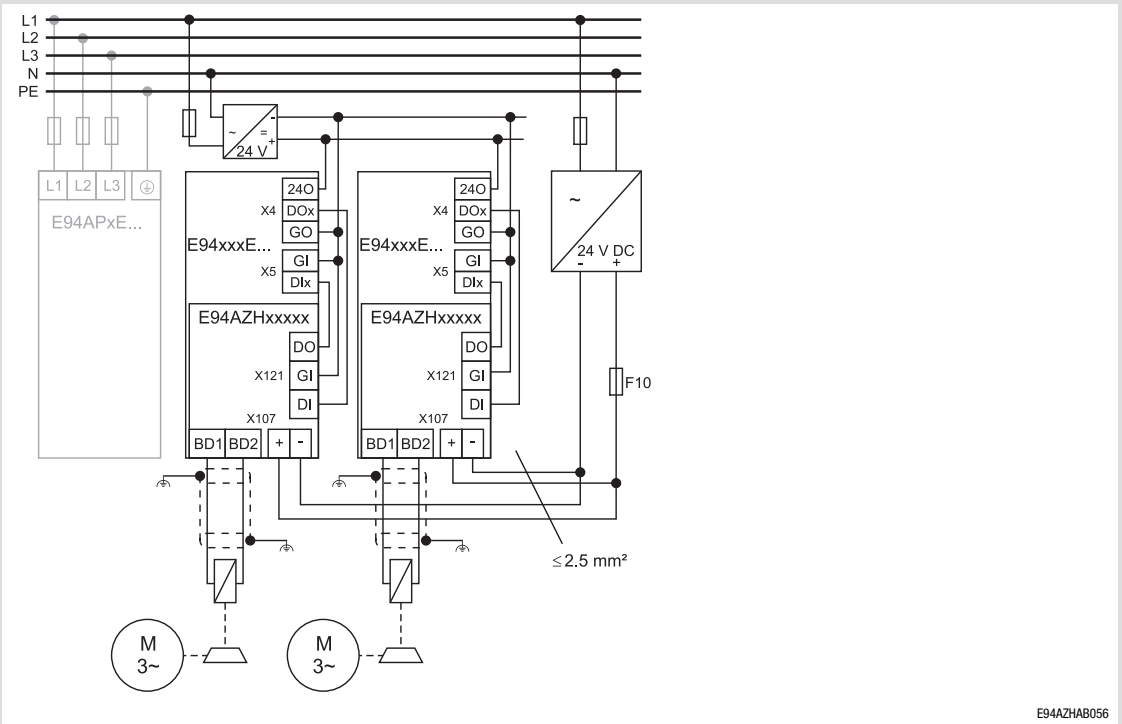

F10 Secondary cable protection. Observe the standards of the cable protection when selecting the fuse!

A Use twin wire end ferrules.

HF shield termination through large-surface PE connection

Terminal data

Terminal X107	Labelling	Description
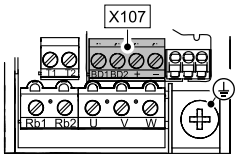 SSP940X107	BD1 BD2	Terminal for the motor holding brake + (Lenze: WH) - (Lenze: BN) E94AZHx0051: 24 V DC, max. 2.5 A Observe correct polarity!
	+ / -	Supply voltage for the motor holding brake (18 ... 30 V DC) Observe correct polarity!

Terminal data	Conductor cross-section		Tightening torque	
	[mm²]	[AWG]	[Nm]	[lb-in]
Single core	0.25 ... 2.5	24 ... 12	0.5 ... 0.6	4.4 ... 5.3
2 conductors [1]	0.25 ... 1.5	24 ... 16		

[1] Two conductors of the same cross-section with a twin wire end ferrule

Terminal X121	Labelling	Description
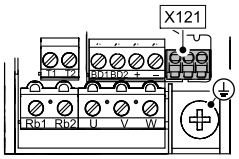 SSP940X107	DI	Terminal for external control in accordance with IEC 61131-2
	GI	Reference potential
	DO	Terminal for external feedback in accordance with IEC 61131-2

Terminal data				
	Conductor cross-section		Tightening torque	
	[mm²]	[AWG]	[Nm]	[lb-in]
Flexible	0.2 ... 1.5	24 ... 16	Spring terminal	
With wire end ferrule	0.25 ... 0.75	24 ... 18	Spring terminal	

8.7.6 Motor holding brake control module E94AZHY0101

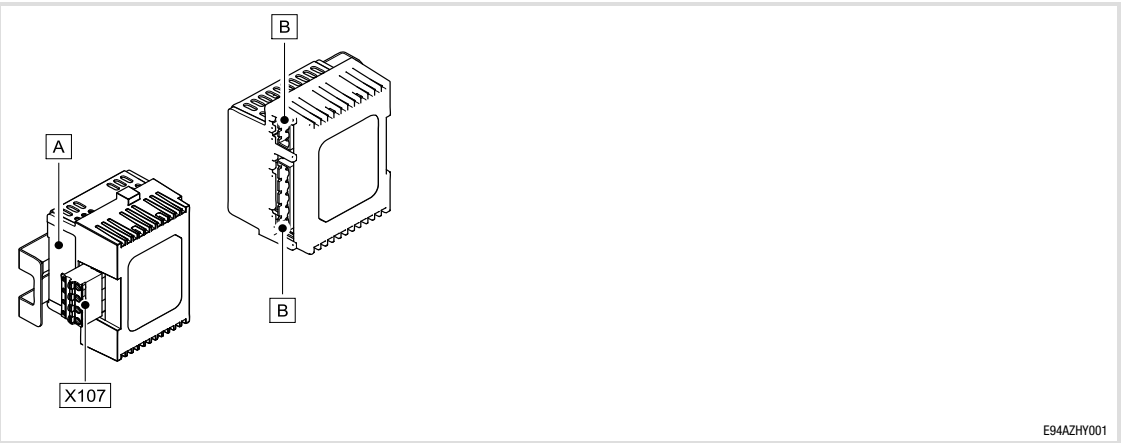

Scope of supply

Pos.	Description
	Motor brake control E94AZHY0101
	Mounting Instructions

Elements of the motor brake control

Pos.	Description
A	Nameplate
B	Connection of standard device
X107	Connection of supply and brake

Identification

Type code	①						
	E94	A	Z	H	Y	xxx	x

Product series

Version

Accessories

Motor brake control type

Rated current
002 = 0.75 A
010 = 5.0 A

Voltage class
1 = 24 V DC
5 = 205 V DC
6 = 180 V DC

Standards

Conformity and approval			
Conformity			
CE	2014/35/EU	Low-Voltage Directive	
CE	2014/30/EU	EMC Directive	
EAC	TP TC 004/2011 (TR CU 004/2011)	On safety of low voltage equipment	Eurasian Conformity TR CU: Technical Regulation of Customs Union
EAC	TP TC 020/2011 (TR CU 020/2011)	Electromagnetic compatibility of technical means	Eurasian Conformity TR CU: Technical Regulation of Customs Union
Approval			
$_{C}UR_{US}$	UL61800-5-1	Power Conversion Equipment (File No. E132659) for USA	
	CSA C22.2 No. 274-13	Power Conversion Equipment (File No. E132659) for Canada	

General electrical data

EMC			
Noise emission	EN 61800-3	Conducted, category C2.	
Noise immunity	EN 61800-3	Burst on mains cable:	2 kV/5 kHz
		Burst on control cable:	2 kV/5 kHz
		Surge on mains cable:	1 kV (1.2 µs/50 µs; phase - phase)
			2 kV (1.2 µs/50 µs; phase - PE)

Rated data

	Voltage	Frequency	Rated current [A]		Number of phases
	[V]	[Hz]	up to +45 °C ①	up to +55 °C ①	
E94AZHY0101	24	0 (DC)	0.3 ... 5	0.3 ... 5	2

① Temperature in the control cabinet

Area	Values
Input voltage	DC 24 V (18 ... 30 V)
Output voltage	Corresponds to input voltage
Brake current	0.3 ... 5 A
Switching capacity	Max. 110 W
Breaking energy	Max. 10 Ws
Cable protection	Recommendation: 7.5 A, tripping characteristic ”B” or ”C”
Control input	
Control voltage	Internal
Control current	
Protective function	
Maximum cable length	In the chapter ”Electrical installation” the dependency of the cable length on the brake current and the cable cross-section is described.
Operating frequency	Max. 6/min
Operating times	Can be ignored compared to the delay time of the brake. See documentation of the brake.
Service life	> 10 millions of cycles
Protection against	
Overload	No
Short circuit of the terminals	Yes
Polarity reversal at the input	Yes
Insulation [1)]	Double insulation (EN61800-5-1: V_{rated} = 300 V AC), Separation (UL: V_{rated} = 500 V AC)

1) Brake connection against control card of the controller

Cable length

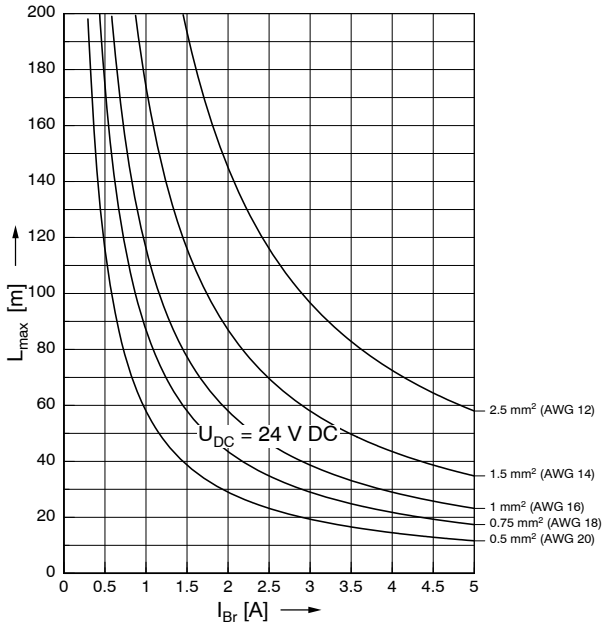

E94AZHY004

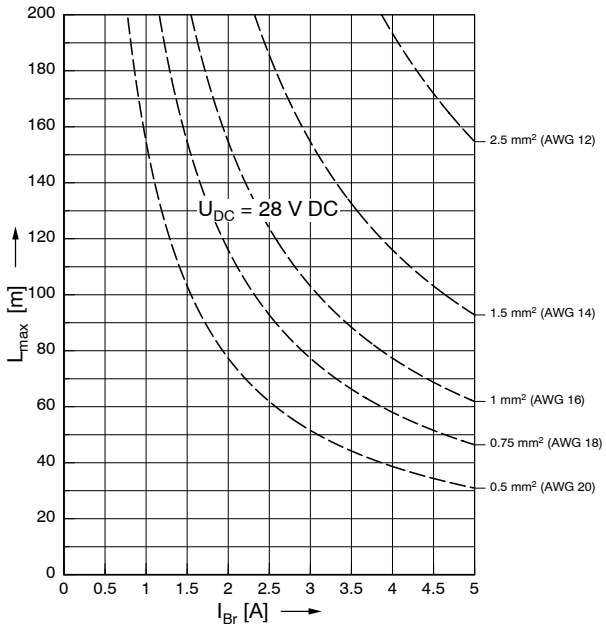

E94AZHY007

L_{max} Maximum brake cable length in [m]
I_{BR} Brake current in [A]
U_{DC} Supply voltage of the motor brake control

Installation steps

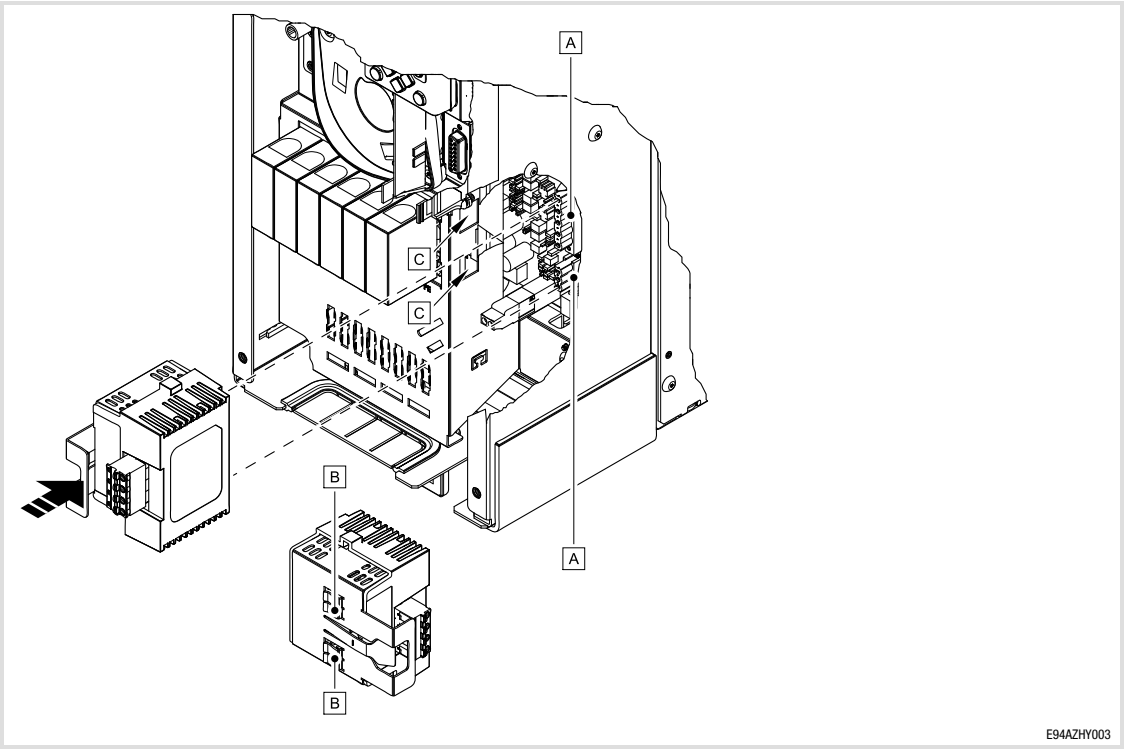

1. Plug the motor brake control module onto the terminals A of the standard device.
   – Ensure that both clips B snap into the slots C of the standard device!
2. Check that the motor brake control module is securely connected.

Connection plan

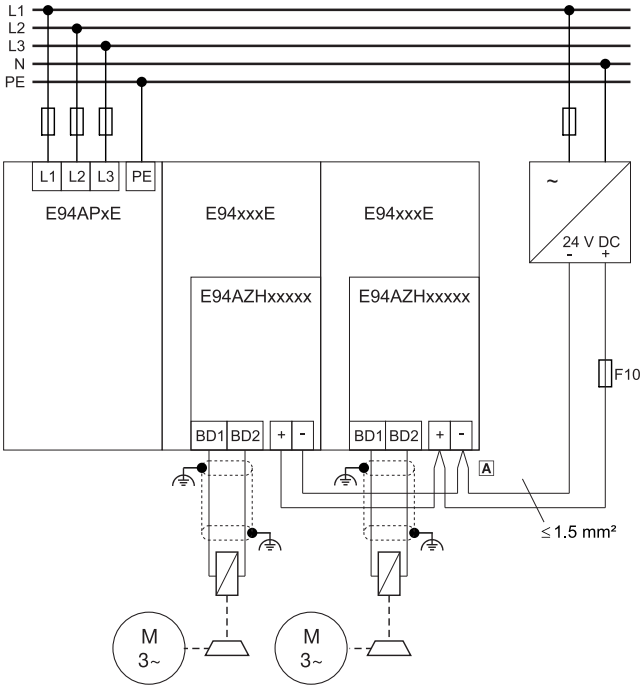

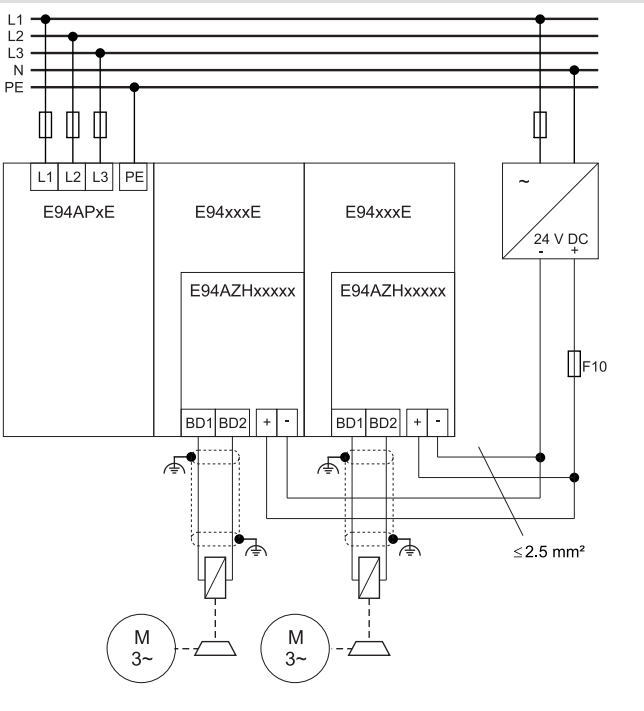

F10 Secondary cable protection. Observe the standards of the cable protection when selecting the fuse!

A Use twin wire end ferrules.

HF shield termination through large-surface PE connection

Terminal data

Terminal X107	Labelling	Description
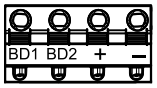 SSP94X6107	BD1 BD2	Connection of the motor holding brake + (Lenze: WH) - (Lenze: BN) E94AZHx0101: 24 V DC, max. 5.0 A Observe correct polarity!
	+ / -	Supply voltage for the motor holding brake (18 ... 30 V DC) Observe correct polarity!

Terminal data				
	Conductor cross-section		Tightening torque	
	[mm²]	[AWG]	[Nm]	[lb-in]
Flexible	0.5 ... 2.5	20 ... 12	Spring terminal	
With wire end ferrule				

Stripping length or contact length: 8 mm

8.7.7 Motor holding brake control module E94AZHB0101

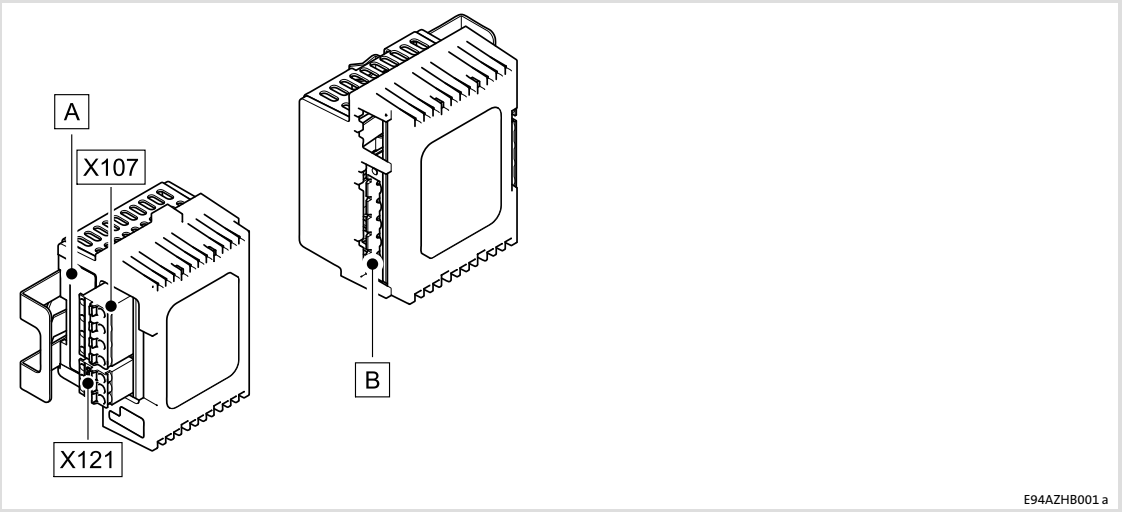

Scope of supply

Pos.	Description
	E94AZHB0101 motor brake control
	Mounting Instructions

Elements of the motor brake control

Pos.	Description
A	Nameplate
B	Terminal for standard device
X107	Terminal for supply and brake
X121	Terminal for external control and feedback

Identification

Type code	①						
	E94	A	Z	H	B	xxx	x
Product series							
Version							
Accessories							
Type of motor brake control							
Rated current 010 = 5.0 A							
Voltage class 1 = 24 V DC							

Standards

Conformity and approval			
Conformity			
CE	2014/35/EU	Low-Voltage Directive	
CE	2014/30/EU	EMC Directive	
EAC	TP TC 004/2011 (TR CU 004/2011)	On safety of low voltage equipment	Eurasian Conformity TR CU: Technical Regulation of Customs Union
EAC	TP TC 020/2011 (TR CU 020/2011)	Electromagnetic compatibility of technical means	Eurasian Conformity TR CU: Technical Regulation of Customs Union
Approval			
$_{C}UR_{US}$	UL61800-5-1	Power Conversion Equipment (File No. E132659) for USA	
	CSA C22.2 No. 274-13	Power Conversion Equipment (File No. E132659) for Canada	

General electrical data

EMC			
Noise emission	EN 61800-3	Conducted, category C2.	
Noise immunity	EN 61800-3	Burst on control cable:	2 kV/5 kHz
		Surge on control cable:	1 kV (1.2 µs/50 µs; control cable - PE)

Rated data

	Voltage	Frequency	Rated current [A]		Number of phases
	[V]	[Hz]	up to +45 °C ①	up to +55 °C ①	
E94AZHB0101	24	0 (DC)	0.3 ... 5	0.3 ... 5	2

① Temperature in the control cabinet

Area	Values
Input voltage	DC 24 V (18 ... 30 V)
Output voltage	Corresponds to input voltage
Brake current	0.3 ... 5 A
Switching capacity	Max. 110 W
Breaking energy	Max. 10 Ws
Cable protection	Recommendation: 7.5 A, tripping characteristic ”B” or ”C”
Maximum cable length	In the chapter ”Electrical installation” the dependency of the cable length on the brake current and the cable cross-section is described.
Operating frequency	Max. 6/min
Operating times	Can be ignored compared to the delay time of the brake. See documentation of the brake.
Service life	> 10 millions of cycles
Protection against	
Overload	No
Short circuit of the terminals	Yes
Polarity reversal at the input	Yes
Insulation [1)]	Double insulation (EN61800-5-1: V_{rated} = 300 V AC), Separation (UL: V_{rated} = 500 V AC)

1) Brake connection against control card of the controller

Cable length

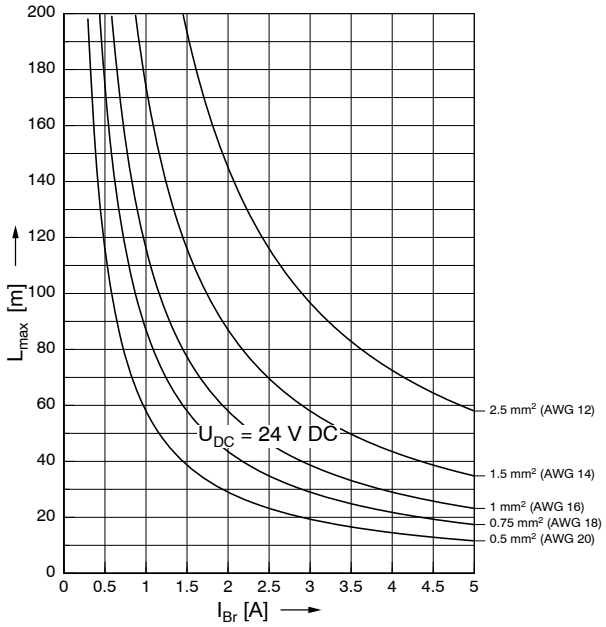

E94AZHY004

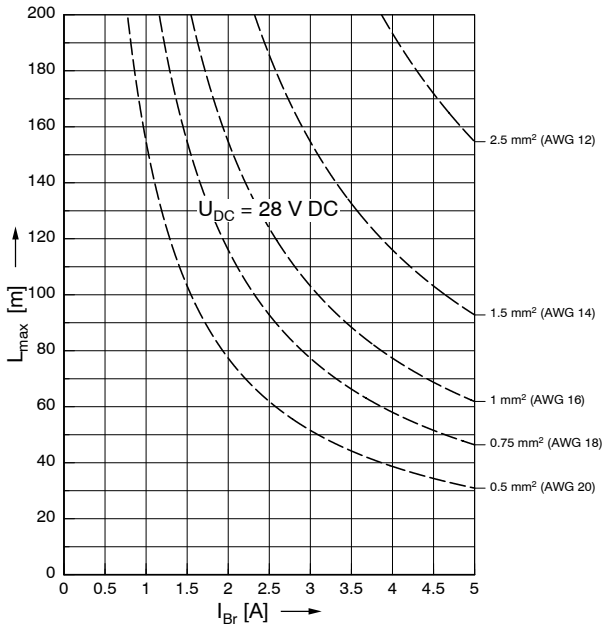

E94AZHY007

L_{max} Maximum brake cable length in [m]
I_{BR} Brake current in [A]
U_{DC} Supply voltage of the motor brake control

Installation steps

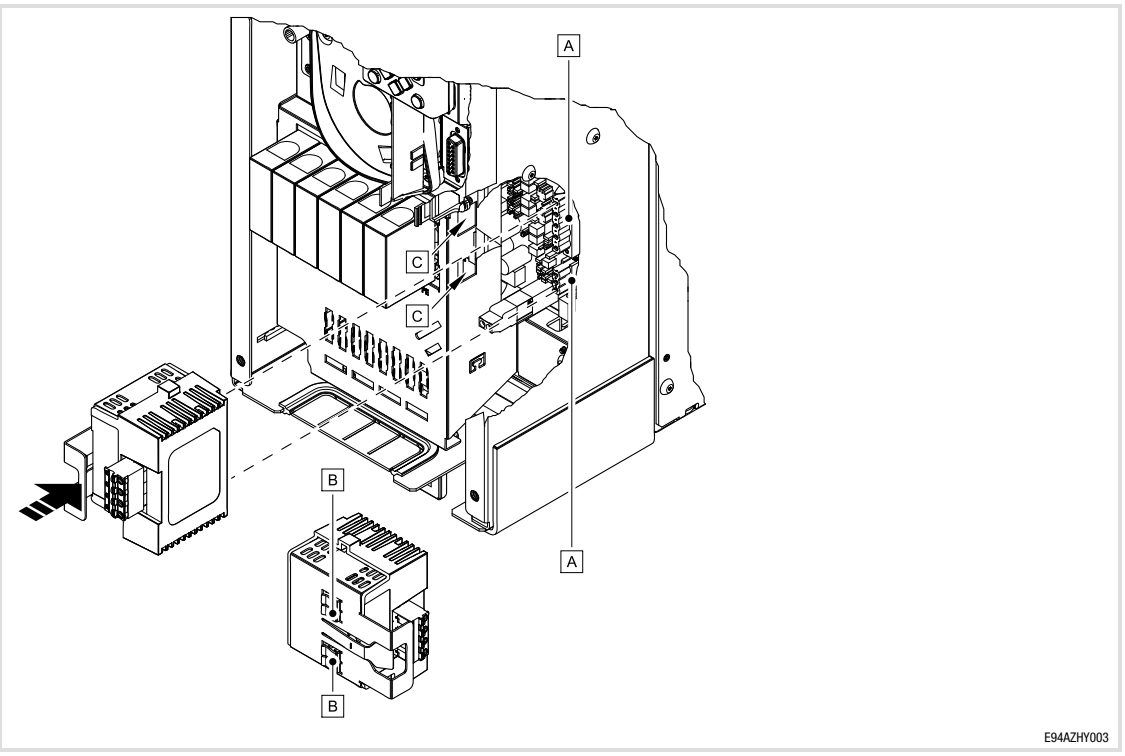

1. Plug the motor brake control module onto the terminals A of the standard device.
   – Ensure that both clips B snap into the slots C of the standard device!
2. Check that the motor brake control module is securely connected.

Connection plan

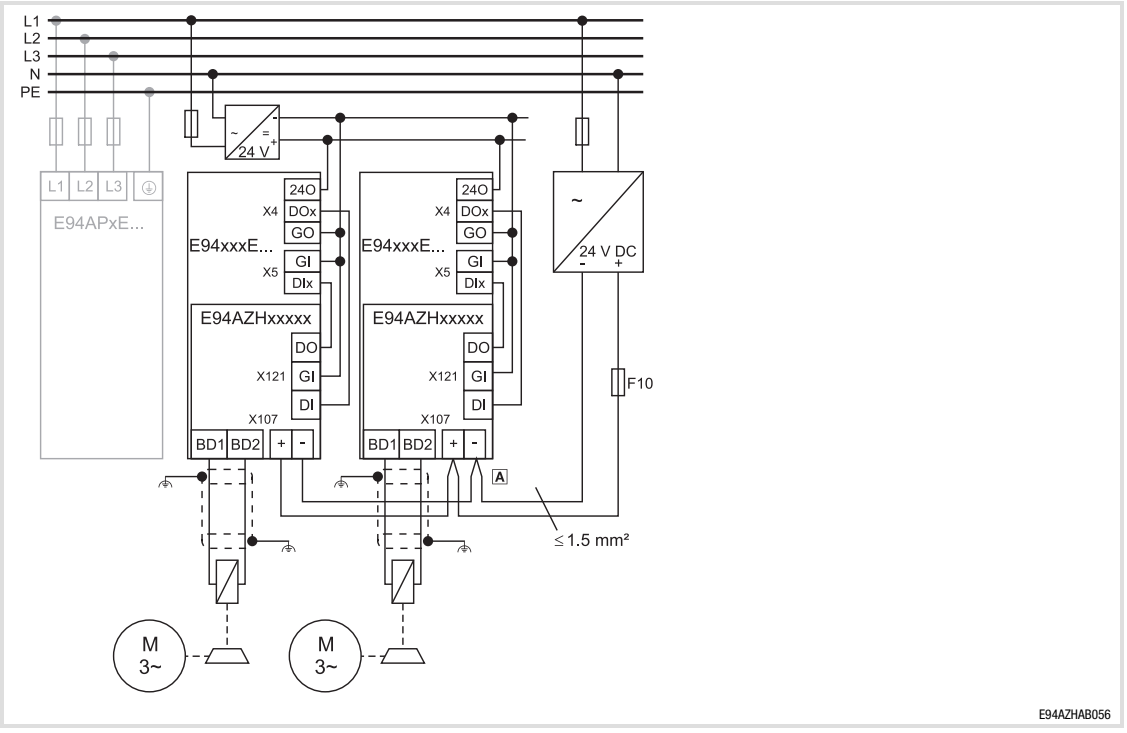

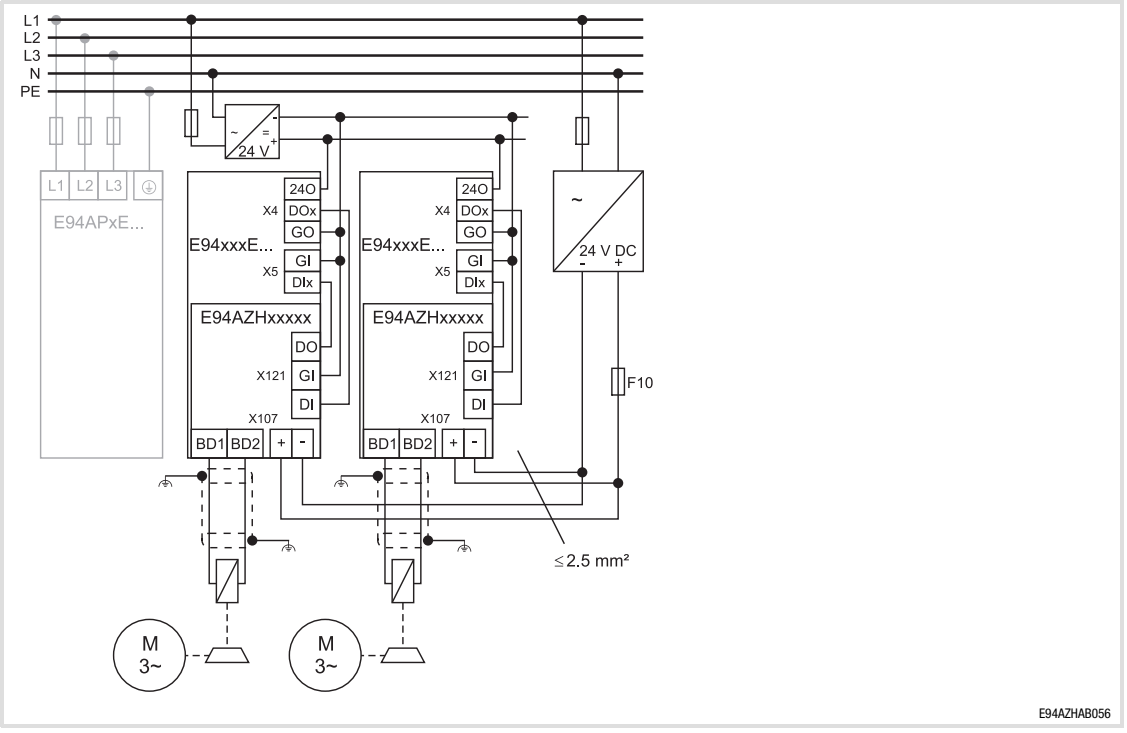

F10 Secondary cable protection. Observe the standards of the cable protection when selecting the fuse!

A Use twin wire end ferrules.

HF shield termination through large-surface PE connection

Terminal data

Terminal X107	Labelling	Description
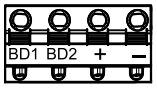 SSP94X6107	BD1 BD2	Connection of the motor holding brake + (Lenze: WH) - (Lenze: BN) E94AZHx0101: 24 V DC, max. 5.0 A Observe correct polarity!
	+ / -	Supply voltage for the motor holding brake (18 ... 30 V DC) Observe correct polarity!

Terminal data				
	Conductor cross-section		Tightening torque	
	[mm²]	[AWG]	[Nm]	[lb-in]
Flexible	0.5 ... 2.5	20 ... 12	Spring terminal	
With wire end ferrule				

Stripping length or contact length: 8 mm

Terminal X121	Labelling	Description
 SSP940X121	DI	Connection for external control in accordance with IEC 61131-2
	GI	Reference potential
	DO	Connection for external feedback in accordance with IEC 61131-2

Terminal data				
	Conductor cross-section		Tightening torque	
	[mm²]	[AWG]	[Nm]	[lb-in]
Flexible	0.2 ... 2.5	24 ... 12	Spring terminal	
With wire end ferrule				

8.7.8 Motor holding brake control module E94AZHY0025

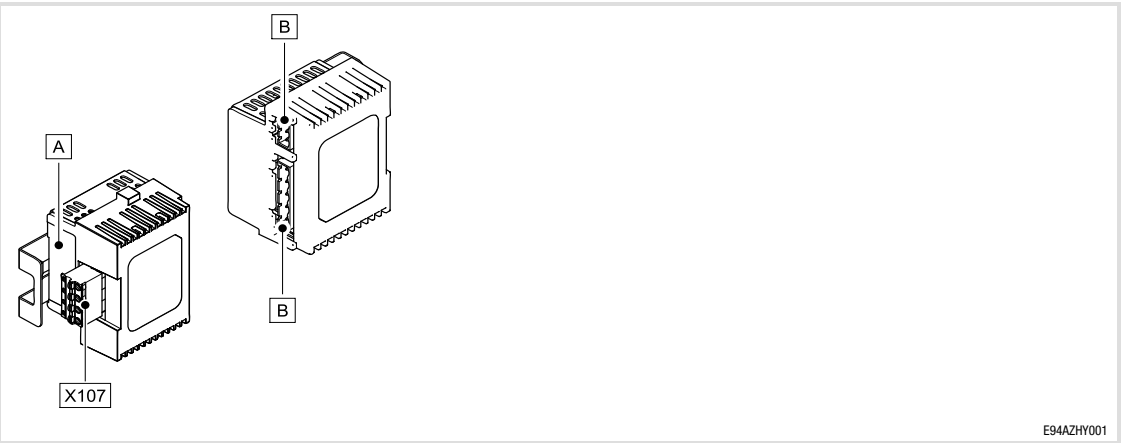

Scope of supply

Pos.	Description
	Motor brake control E94AZHY0025
	Mounting Instructions

Elements of the motor brake control

Pos.	Description
A	Nameplate
B	Connection of standard device
X107	Connection of supply and brake

Identification

Type code	①						
	E94	A	Z	H	Y	xxx	x

Product series
Version
Accessories
Motor brake control type
Rated current
002 = 0.75 A
010 = 5.0 A
Voltage class
1 = 24 V DC
5 = 205 V DC
6 = 180 V DC

Standards

Conformity and approval			
Conformity			
CE	2014/35/EU	Low-Voltage Directive	
CE	2014/30/EU	EMC Directive	
EAC	TP TC 004/2011 (TR CU 004/2011)	On safety of low voltage equipment	Eurasian Conformity TR CU: Technical Regulation of Customs Union
EAC	TP TC 020/2011 (TR CU 020/2011)	Electromagnetic compatibility of technical means	Eurasian Conformity TR CU: Technical Regulation of Customs Union
Approval			
$_{c}UR_{US}$	UL61800-5-1	Power Conversion Equipment (File No. E132659) for USA	
	CSA C22.2 No. 274-13	Power Conversion Equipment (File No. E132659) for Canada	

General electrical data

EMC			
Noise emission	EN 61800-3	Conducted, category C2.	
Noise immunity	EN 61800-3	Burst on mains cable:	2 kV/5 kHz
		Burst on control cable:	2 kV/5 kHz
		Surge on mains cable:	1 kV (1.2 µs/50 µs; phase - phase)
			2 kV (1.2 µs/50 µs; phase - PE)

Rated data

	Voltage	Frequency	Rated current [A]		Number of phases
	[V]	[Hz]	up to +45 °C ①	up to +55 °C ①	
E94AZHY0025	230/290	50/60	0.75/0.75	0.54/0.54	1
E94AZHY0025	205/260	0 (DC)	0.75/0.75	0.54/0.54	1

① Temperature in the control cabinet

Area	Values
Input voltage	AC 230 V (180 ... 317 V), 45 ... 65 Hz
Output voltage	DC 205 V With mains voltage of AC 230 V
Brake current	0.1 ... 0.75 A
Cable protection	Recommendation: 5 A, tripping characteristic ”B” or ”C”
Control input	
Control voltage	Internal
Control current	
Protective function	
Max. connectable cable cross-section	2.5 mm^2 AWG 12
Maximum cable length	150 m

Permissible operating frequencies

Recommended brake	Power	Coil: Voltage DC 205 V		Permissible operating frequency
Type	P [W]	L [H]	I [A] (20 °C)	[1/min]
BFK457-06E BFK458-06E	20	76	0.10	60
BFK457-08E BFK458-08E	25	66	0.12	60
BFK457-10E BFK458-10E	30	85	0.15	60
BFK457-12E BFK458-12E	40	107	0.20	40
BFK457-14E BFK458-14E	50	102	0.24	30
BFK457-16E BFK458-16E	55	127	0.27	20
BFK457-18E BFK458-18E	85	100	0.41	10
BFK457-20E BFK458-20E	100	115	0.49	8
BFK457-25E BFK458-25E	110	134	0.54	6

Installation steps

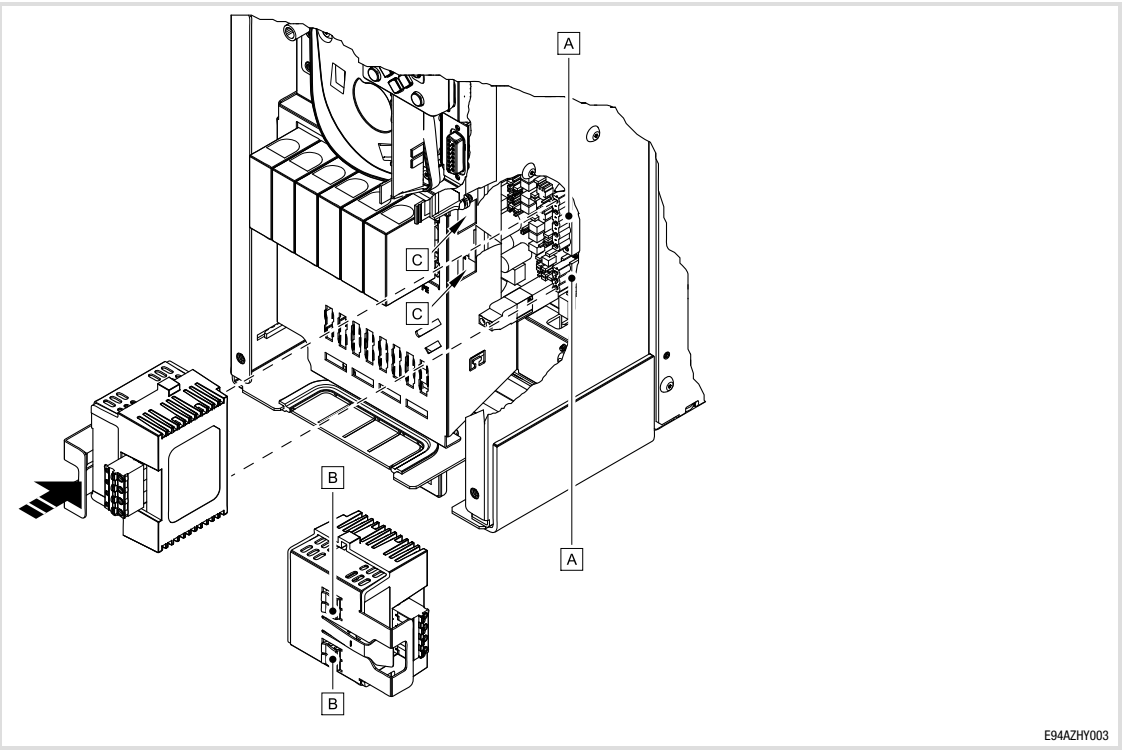

1. Plug the motor brake control module onto the terminals A of the standard device.
   – Ensure that both clips B snap into the slots C of the standard device!
2. Check that the motor brake control module is securely connected.

Connection plan

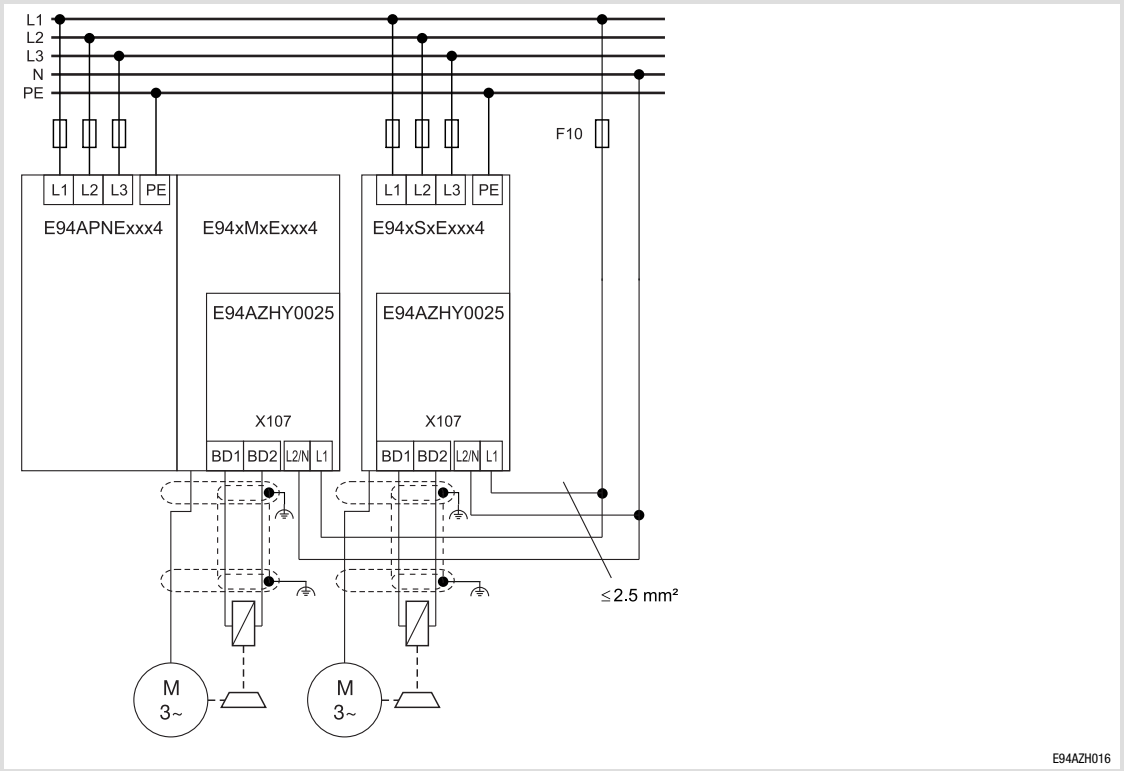

F10 Observe the cable protection standards for fuse dimensioning!
HF shield termination through large-surface PE connection

Terminal data

Terminal X107	Labelling	Description
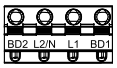 SSP94A6107	BD1 BD2	Connection of the motor holding brake: + (Lenze: WH) - (Lenze: BN) E94AZHY0025: 205 V DC, max. 0.75 A Ensure correct polarity!
	L1 L2/N	Supply voltage of the motor holding brake

Terminal data				
	Conductor cross-section		Tightening torque	
	[mm²]	[AWG]	[Nm]	[lb-in]
Flexible	0.5 ... 2.5	20 ... 12	Spring terminal	
With wire end ferrule				

Stripping length or contact length: 8 mm

8.7.9 Motor holding brake control module E94AZHN0025

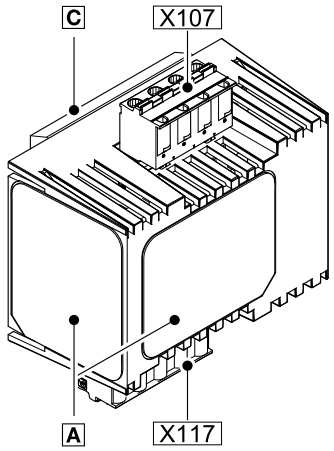

E94AZHN0025_003

Scope of supply

Pos.	Description
	Motor brake control E94AZHN0025
	Mounting Instructions
C	DIN rail adapter

Elements of the motor brake control

Pos.	Description
A	Nameplate
X117	Control connection
X107	Connection of supply and brake

Identification

Type code	①						
	E94	A	Z	H	N	xxx	x

Product series

Accessories

Motor brake control type

Rated current
002 = 0.75 A

Voltage class
5 = 205 V DC
6 = 180 V DC

Standards

Conformity and approval			
Conformity			
CE	2014/35/EU	Low-Voltage Directive	
CE	2014/30/EU	EMC Directive	
EAC	TP TC 004/2011 (TR CU 004/2011)	On safety of low voltage equipment	Eurasian Conformity TR CU: Technical Regulation of Customs Union
EAC	TP TC 020/2011 (TR CU 020/2011)	Electromagnetic compatibility of technical means	Eurasian Conformity TR CU: Technical Regulation of Customs Union
Approval			
$_{c}UR_{US}$	UL61800-5-1	Power Conversion Equipment (File No. E132659) for USA	
	CSA C22.2 No. 274-13	Power Conversion Equipment (File No. E132659) for Canada	

General electrical data

EMC			
Noise emission	EN 61800-3	Conducted, category C2.	
Noise immunity	EN 61800-3	Burst on mains cable:	2 kV/5 kHz
		Burst on control cable:	2 kV/5 kHz
		Surge on mains cable:	1 kV (1.2 µs/50 µs; phase - phase)
			2 kV (1.2 µs/50 µs; phase - PE)

Rated data

	Voltage	Frequency	Rated current [A]		Number of phases
	[V]	[Hz]	up to +45 °C ①	up to +55 °C ①	
E94AZHN0025	230/290	50/60	0.75/0.75	0.54/0.54	1
E94AZHN0025	205/260	0 (DC)	0.75/0.75	0.54/0.54	1

① Temperature in the control cabinet

Area	Values	
Input voltage	AC 230 V (180 ... 317 V), 45 ... 65 Hz	
Output voltage	DC 205 V	With mains voltage of AC 230 V
Brake current	0.1 ... 0.75 A	
Cable protection	Recommendation: 5 A, tripping characteristic "B" or "C"	
Control input DI **Signalling output DO**		
Control voltage	DC 24 V, PLC level	
	HIGH LOW	DC +15 ... 30 V DC 0 ... +3 V
Control current		
Input	5 ... 10 mA	
Output	5 ... 50 mA	
Protective function	Protected against polarity reversal up to DC 60 V	
Max. connectable cable cross-section	2.5 mm^2 AWG 12	
Maximum cable length	150 m	

Permissible operating frequencies

Recommended brake	Power	Coil: Voltage DC 205 V		Permissible operating frequency
Type	**P [W]**	**L [H]**	**I [A] (20 °C)**	**[1/min]**
BFK457-06E BFK458-06E	20	76	0.10	60
BFK457-08E BFK458-08E	25	66	0.12	60
BFK457-10E BFK458-10E	30	85	0.15	60
BFK457-12E BFK458-12E	40	107	0.20	40
BFK457-14E BFK458-14E	50	102	0.24	30
BFK457-16E BFK458-16E	55	127	0.27	20
BFK457-18E BFK458-18E	85	100	0.41	10
BFK457-20E BFK458-20E	100	115	0.49	8
BFK457-25E BFK458-25E	110	134	0.54	6

Dimensions

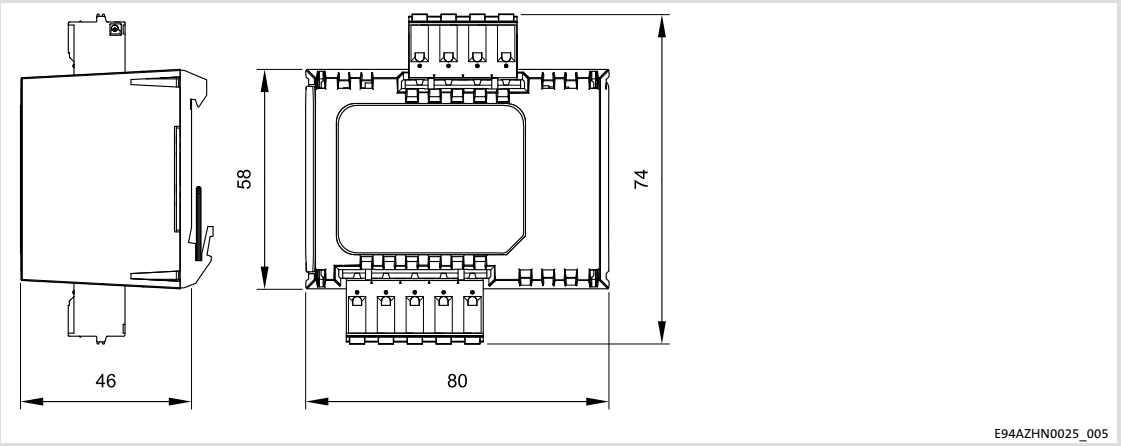

All dimensions in millimetres.

Installation steps

1. Attach the motor brake control with the DIN rail adapter [C] to the bottom of the DIN rail.
2. Engage the motor brake control against the spring pressure at the top of the DIN rail edge.
3. Check motor brake control for tight fit.

Connection plan

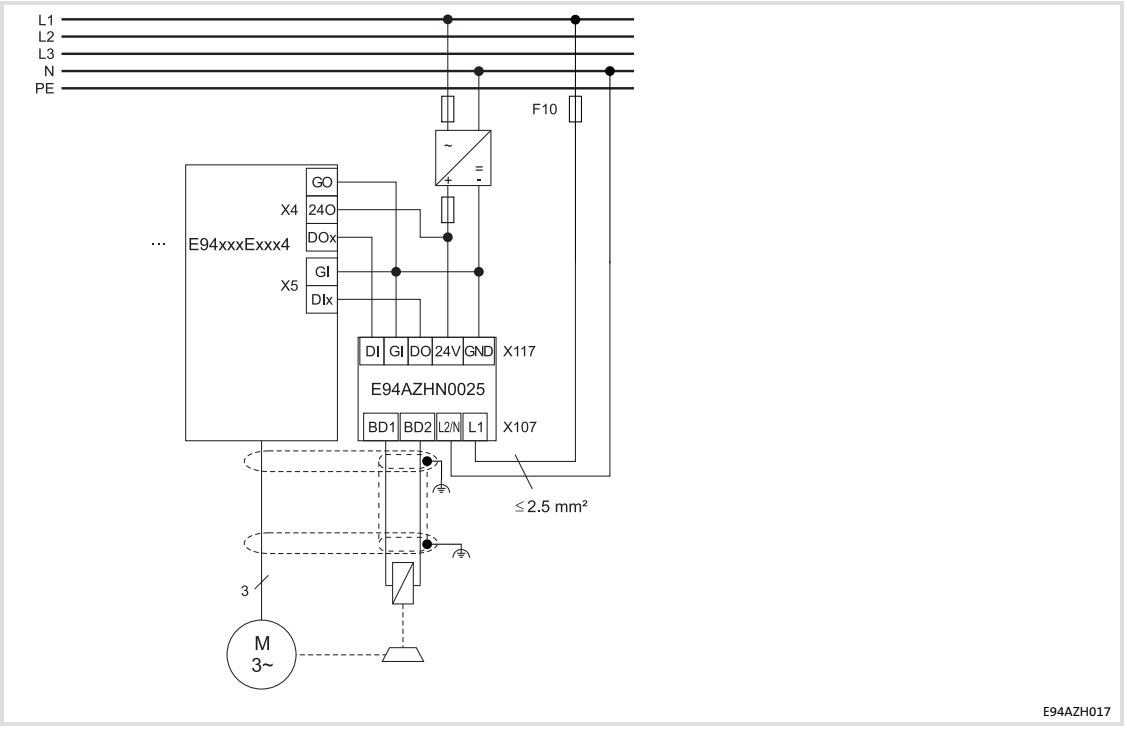

F10 Cable protection of the motor holding brake
Observe the cable protection standards for fuse dimensioning!
E94... Components of the 9400 series
⏚ HF shield termination through large-surface PE connection

Terminal data

Motor holding brake connection

Terminal X107	Labelling	Description
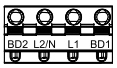 SSP94A6107	BD1 BD2	Connection of the motor holding brake: + (Lenze: WH) - (Lenze: BN) E94AZHN0025: 205 V DC, max. 0.75 A Ensure correct polarity!
	L1 L2/N	Supply voltage of the motor holding brake

Terminal data				
	Conductor cross-section		Tightening torque	
	[mm²]	[AWG]	[Nm]	[lb-in]
Flexible With wire end ferrule	0.5 ... 2.5	20 ... 12	Spring terminal	

Stripping length or contact length: 8 mm

Control connection

Terminal X117	Labelling	Description
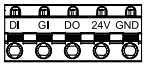 SSP94A6117	DI	Digital input
	GI	GND digital in
	DO	Signalling output
	24V	24-V supply by safely separated power supply unit (SELV/PELV)
	GND	GND digital out

Terminal data				
	Conductor cross-section		Tightening torque	
	[mm²]	[AWG]	[Nm]	[lb-in]
Flexible With wire end ferrule	0.5 ... 2.5	20 ... 12	Spring terminal	

Stripping length or contact length: 8 mm

8.7.10 Motor holding brake control module E94AZHY0026

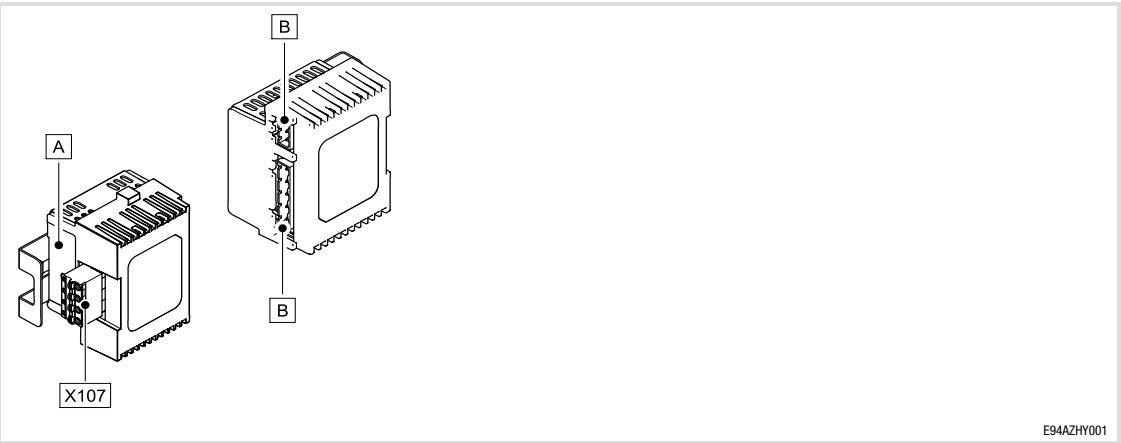

Scope of supply

Pos.	Description
	Motor brake control E94AZHY0026
	Mounting Instructions

Elements of the motor brake control

Pos.	Description
A	Nameplate
B	Connection of standard device
X107	Connection of supply and brake

Identification

Type code	①						
	E94	A	Z	H	Y	xxx	x

Product series

Version

Accessories

Motor brake control type

Rated current
002 = 0.75 A
010 = 5.0 A

Voltage class
1 = 24 V DC
5 = 205 V DC
6 = 180 V DC

Standards

Conformity and approval			
Conformity			
CE	2014/35/EU	Low-Voltage Directive	
CE	2014/30/EU	EMC Directive	
EAC	TP TC 004/2011 (TR CU 004/2011)	On safety of low voltage equipment	Eurasian Conformity TR CU: Technical Regulation of Customs Union
EAC	TP TC 020/2011 (TR CU 020/2011)	Electromagnetic compatibility of technical means	Eurasian Conformity TR CU: Technical Regulation of Customs Union
Approval			
$_{c}UR_{US}$	UL61800-5-1	Power Conversion Equipment (File No. E132659) for USA	
	CSA C22.2 No. 274-13	Power Conversion Equipment (File No. E132659) for Canada	

General electrical data

EMC			
Noise emission	EN 61800-3	Conducted, category C2.	
Noise immunity	EN 61800-3	Burst on mains cable:	2 kV/5 kHz
		Burst on control cable:	2 kV/5 kHz
		Surge on mains cable:	1 kV (1.2 µs/50 µs; phase - phase)
			2 kV (1.2 µs/50 µs; phase - PE)

Rated data

	Voltage [V]	Frequency [Hz]	Rated current [A]		Number of phases
			up to +45 °C ①	up to +55 °C ①	
E94AZHY0026	400/480	50/60	0.61/0.61	0.61/0.61	1
E94AZHY0026	180/216	0 (DC)	0.61/0.61	0.61/0.61	1

① Temperature in the control cabinet

Field	Values
Input voltage	AC 400 V (320 ... 528 V), 45 ... 65 Hz
Output voltage	DC 180 V at a mains voltage of AC 400 V
Brake current	0.1 ... 0.61 A
Cable protection	Recommendation: 5 A, tripping characteristic ”B” or ”C”
Control input	
Control voltage	Internal
Control current	
Protective function	
Max. connectable cable cross-section	2.5 mm^2 AWG 12
Maximum cable length	150 m

Permissible operating frequencies

Recommended brake	Power	Coil: Voltage DC 180 V		Permissible operating frequency
Type	P [W]	L [H]	I [A] (20 °C)	[rpm]
BFK457-06E BFK458-06E	20	60	0.11	60
BFK457-08E BFK458-08E	25	50	0.14	60
BFK457-10E BFK458-10E	30	69	0.17	60
BFK457-12E BFK458-12E	40	81	0.22	40
BFK457-14E BFK458-14E	50	78	0.28	30
BFK457-16E BFK458-16E	55	102	0.31	20
BFK457-18E BFK458-18E	85	77	0.47	10
BFK457-20E BFK458-20E	100	92	0.56	8
BFK457-25E BFK458-25E	110	102	0.61	6

Installation steps

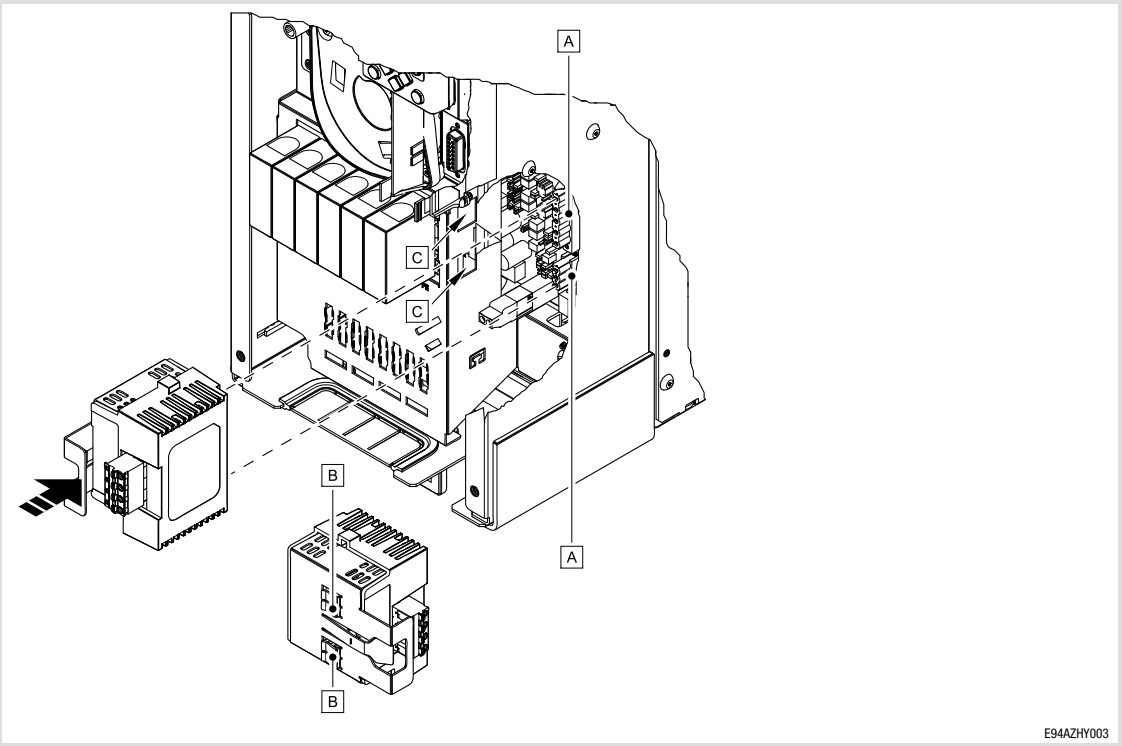

1. Plug the motor brake control module onto the terminals A of the standard device.
   – Ensure that both clips B snap into the slots C of the standard device!
2. Check that the motor brake control module is securely connected.

Connection plan

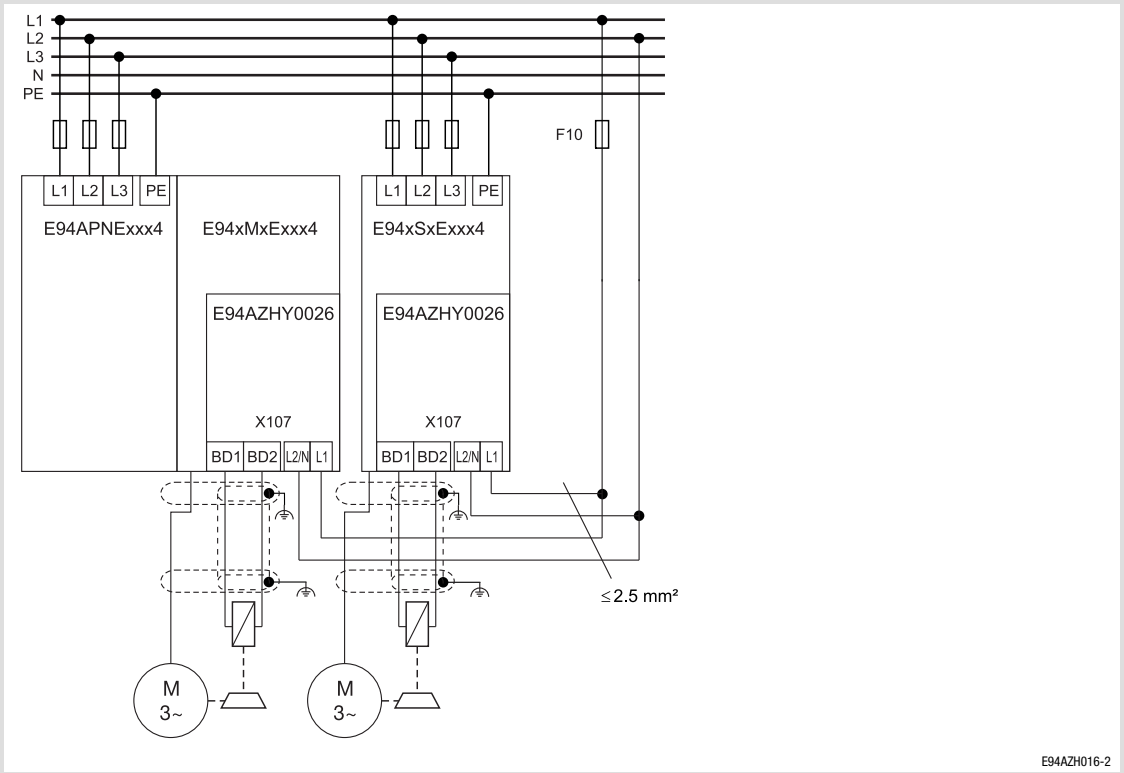

F10 Observe the cable protection standards for fuse dimensioning!

HF shield termination through large-surface PE connection

Terminal data

Terminal X107	Labelling	Description
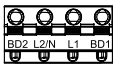 SSP94A6107	BD1 BD2	Connection of the motor holding brake: + (Lenze: WH) - (Lenze: BN) E94AZHY0026: 180 V DC, max. 0.61 A Ensure correct polarity!
	L1 L2/N	Supply voltage of the motor holding brake

Terminal data				
	Conductor cross-section		Tightening torque	
	[mm²]	[AWG]	[Nm]	[lb-in]
Flexible	0.5 ... 2.5	20 ... 12	Spring terminal	
With wire end ferrule				

Stripping length or contact length: 8 mm

8.7.11 Motor holding brake control module E94AZHN0026

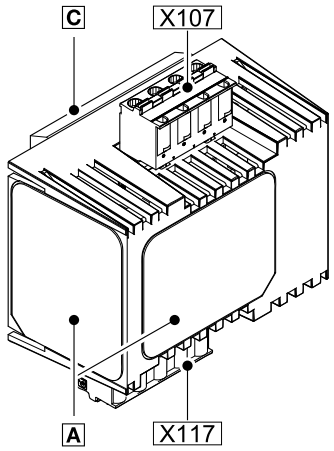

E94AZHN0025_003

Scope of supply

Pos.	Description
	Motor brake control E94AZHN0026
	Mounting Instructions
C	DIN rail adapter

Elements of the motor brake control

Pos.	Description
A	Nameplate
X117	Control connection
X107	Connection of supply and brake

Identification

Type code	①						
	E94	A	Z	H	N	xxx	x

Product series

Accessories

Motor brake control type

Rated current
002 = 0.75 A

Voltage class
5 = 205 V DC
6 = 180 V DC

Standards

Conformity and approval			
Conformity			
CE	2014/35/EU	Low-Voltage Directive	
CE	2014/30/EU	EMC Directive	
EAC	TP TC 004/2011 (TR CU 004/2011)	On safety of low voltage equipment	Eurasian Conformity TR CU: Technical Regulation of Customs Union
EAC	TP TC 020/2011 (TR CU 020/2011)	Electromagnetic compatibility of technical means	Eurasian Conformity TR CU: Technical Regulation of Customs Union
Approval			
$_{C}UR_{US}$	UL61800-5-1	Power Conversion Equipment (File No. E132659) for USA	
	CSA C22.2 No. 274-13	Power Conversion Equipment (File No. E132659) for Canada	

General electrical data

EMC			
Noise emission	EN 61800-3	Conducted, category C2.	
Noise immunity	EN 61800-3	Burst on mains cable:	2 kV/5 kHz
		Burst on control cable:	2 kV/5 kHz
		Surge on mains cable:	1 kV (1.2 µs/50 µs; phase - phase)
			2 kV (1.2 µs/50 µs; phase - PE)
Mounting conditions			
Mounting place		In the control cabinet	
Mounting position		Vertically	
Mounting clearances			
Above/below		≥ 25 mm	
To the sides		Side-by-side mounting without clearance	

Rated data

	Voltage	Frequency	Rated current [A]		Number of phases
	[V]	[Hz]	up to +45 °C ①	up to +55 °C ①	
E94AZHN0026	400/480	50/60	0.75/0.75	0.61/0.61	1
E94AZHN0026	180/216	0 (DC)	0.75/0.75	0.61/0.61	1

① Temperature in the control cabinet

Field	Values
Input voltage	AC 400 V (320 ... 528 V), 45 ... 65 Hz
Output voltage	DC 180 V at a mains voltage of AC 400 V
Brake current	0.1 ... 0.61 A
Cable protection	Recommendation: 5 A, tripping characteristic "B" or "C"
Control input DI **Signalling output DO**	
Control voltage	DC 24 V, PLC level
	HIGH DC +15 ... 30 V LOW DC 0 ... +3 V
Control current	
Input	5 ... 10 mA
Output	5 ... 50 mA
Protective function	Protected against polarity reversal up to DC 60 V
Max. connectable cable cross-section	2.5 mm^2 AWG 12
Maximum cable length	150 m

Permissible operating frequencies

Recommended brake	Power	Coil: Voltage DC 180 V		Permissible operating frequency
Type	P [W]	L [H]	I [A] (20 °C)	[rpm]
BFK457-06E BFK458-06E	20	60	0.11	60
BFK457-08E BFK458-08E	25	50	0.14	60
BFK457-10E BFK458-10E	30	69	0.17	60
BFK457-12E BFK458-12E	40	81	0.22	40
BFK457-14E BFK458-14E	50	78	0.28	30
BFK457-16E BFK458-16E	55	102	0.31	20
BFK457-18E BFK458-18E	85	77	0.47	10
BFK457-20E BFK458-20E	100	92	0.56	8
BFK457-25E BFK458-25E	110	102	0.61	6

Dimensions

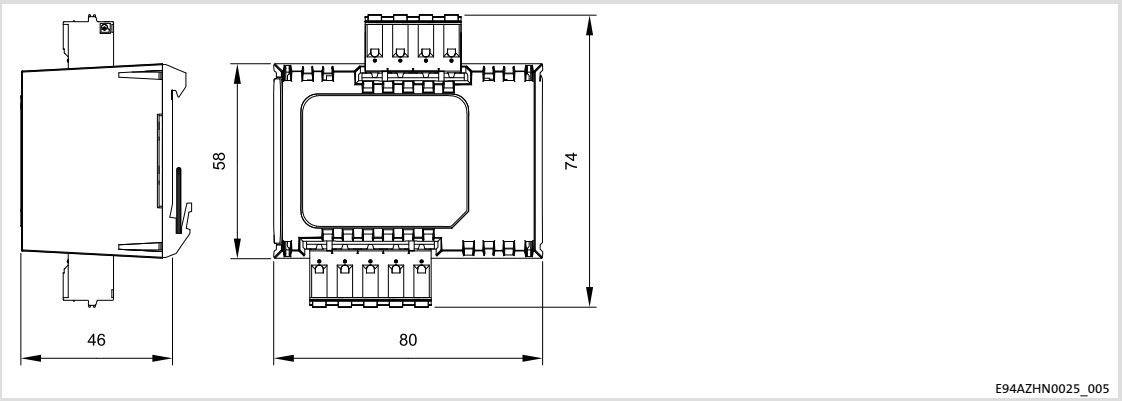

All dimensions in millimetres.

Installation steps

1. Attach the motor brake control with the DIN rail adapter Ⓒ to the bottom of the DIN rail.
2. Engage the motor brake control against the spring pressure at the top of the DIN rail edge.
3. Check motor brake control for tight fit.

Connection plan

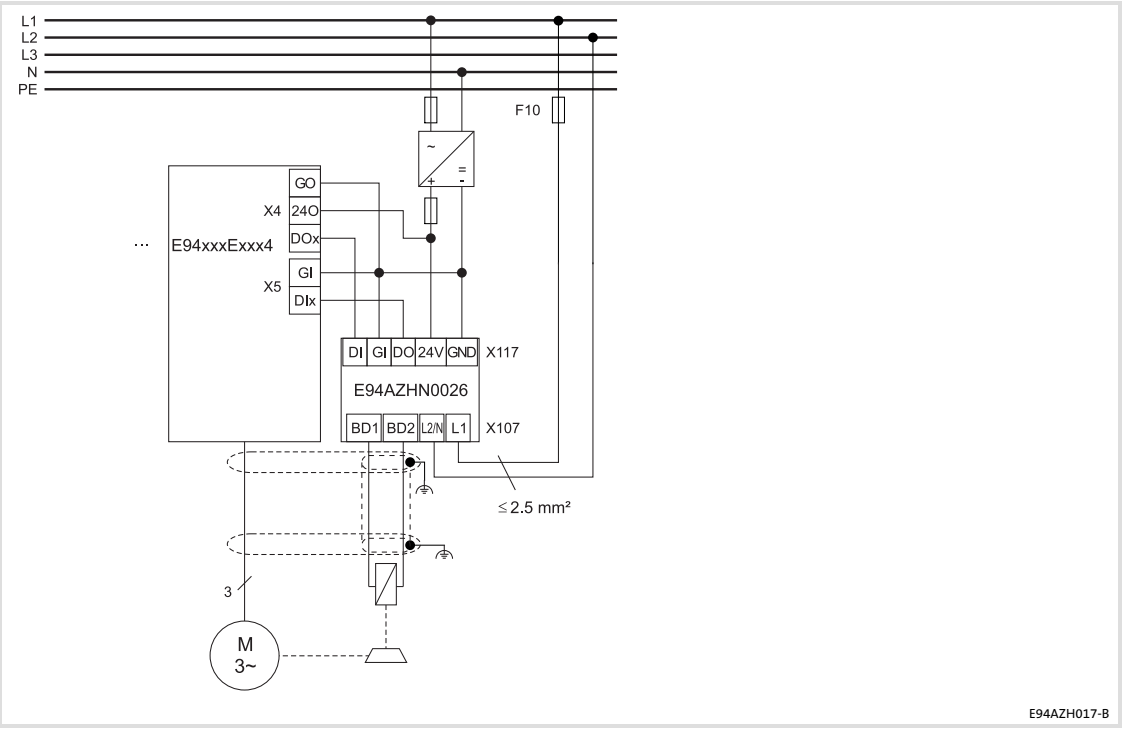

F10 Cable protection of the motor holding brake
Observe the cable protection standards for fuse dimensioning!
E94... Components of the 9400 series
⏚ HF shield termination through large-surface PE connection

Terminal data

Connection of the motor holding brake

Terminal X107	Labelling	Description
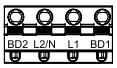 SSP94A6107	BD1 BD2	Connection of the motor holding brake: + (Lenze: WH) - (Lenze: BN) E94AZHN0026: 180 V DC, max. 0.75 A Ensure correct polarity!
	L1 L2/N	Supply voltage of the motor holding brake

Terminal data				
	Conductor cross-section		Tightening torque	
	[mm²]	[AWG]	[Nm]	[lb-in]
Flexible With wire end ferrule	0.5 ... 2.5	20 ... 12	Spring terminal	

Stripping length or contact length: 8 mm

Control connection

Terminal X117	Labelling	Description
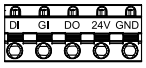 SSP94A6117	DI	Digital input
	GI	GND digital in
	DO	Signalling output
	24V	24-V supply by safely separated power supply unit (SELV/PELV)
	GND	GND digital out

Terminal data				
	Conductor cross-section		Tightening torque	
	[mm²]	[AWG]	[Nm]	[lb-in]
Flexible With wire end ferrule	0.5 ... 2.5	20 ... 12	Spring terminal	

Stripping length or contact length: 8 mm

8.8 Accessories for diagnostics

8.8.1 USB diagnostic adapter

Identification

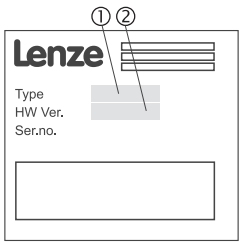

E94ZCUS003

	①					②
	E94	A	Z	C	US	VA

Product range
Version
Module identification: accessories
Module type: communication module
USB diagnostic adapter
Hardware version

Scope of supply

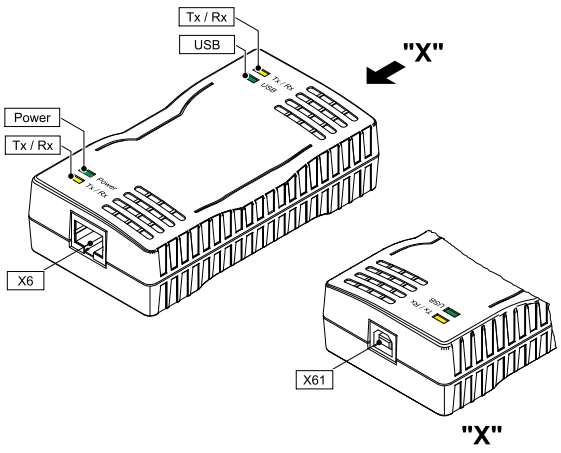

E894ZCUS001BA

Pos.	Description
	USB diagnostic adapter E94AZCUS
	USB cable
	Mounting Instructions

Connections

Pos.	Description
X61	USB connection
X6	Connection of the basic device (RJ69 socket)

Displays

LED			
Pos.	Colour	Condition	Description
Power	Green	On	Diagnostic adapter is supplied with voltage by the basic device.
Tx / Rx	Yellow	Blinking	Basic device and PC communicate with each other via the diagnostic adapter.
USB	Green	On	Diagnostic adapter is connected to the PC and configured via USB.

Rated data

Field	Details
USB connection (X61)	Maximum current consumption: 100 mA

Installation steps

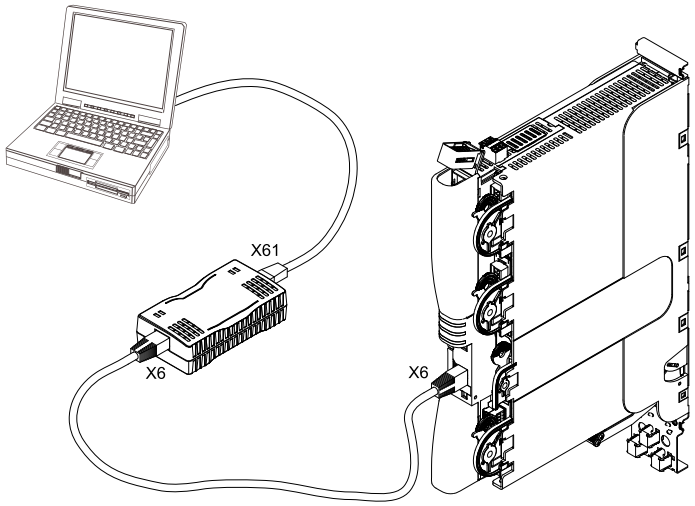

E94ZCUS002

8.8.2 Keypad

Identification

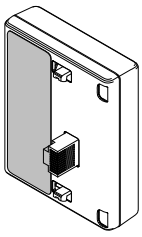

E94AZKAE036

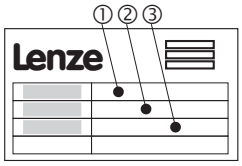

E94AZKAE100

	①					②	③
	EZ	AE	B	K	xxxx	xx	xx

Product range: accessories

Design
AE = display unit

Version

Module type: keypad

100x = Keypad
200x = Diagnosis terminal

Hardware version

Software version

Scope of supply

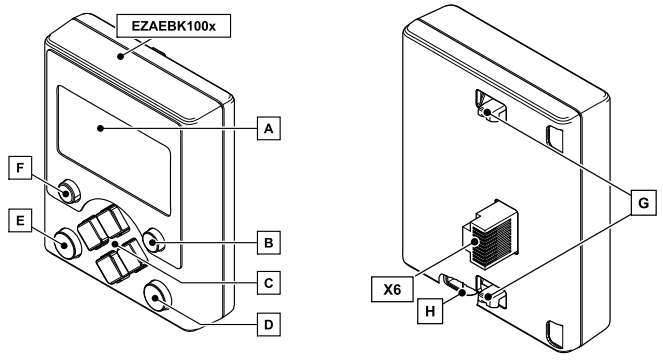

E94AZKAE025/035

Elements on the front

Pos.	Description
A	LCD display
B	Right function key
C	Navigation keys ⇧⇩⇦⇨
D	run key
E	stop key
F	Left function key

Elements on the back side

Pos.	Description
G	Lock hook
H	Release button
X6	RJ69 connector, connection on diagnostic interface (X6) on the basic device

Application range

The use of this module is permissible with basic devices as of nameplate designation:

Inverter				Keypad X400		
	Type	HW	SW	Type	HW	SW
Servo Drives 9400	E94...	VB	01.10	EZAEBK1001	VA	02.00
Inverter Drives 8400	E84AV...	VA	00.07	EZAEBK1001	VA	02.00 1)
				EZAEBK1001	VA	04.xx

Rated data

Field	Values	
Enclosure	IP20	IP65 (EZAEBK200x with EZAMSHHT)
Ambient temperature	In operation:	-10 °C ... +55 °C
	Transport:	-25 °C ... +70 °C
	Storage:	-25 °C ... +55 °C
Climatic conditions	Class 3K3 in accordance with EN 50178 (without condensation, average relative humidity 85 %)	
Degree of pollution	EN 61800-5-1, degree of pollution 2	

Mounting

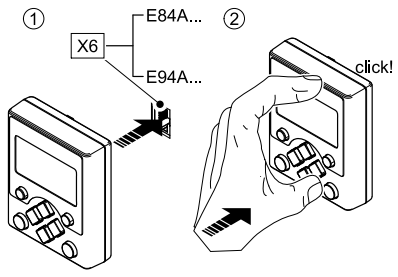

E94AZKAE055

Dismounting

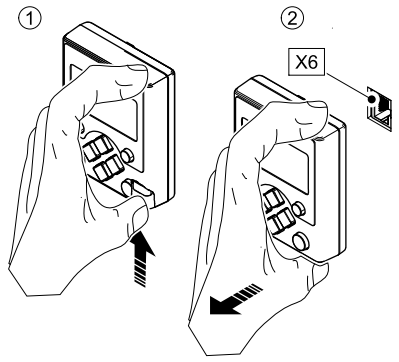

E94AZKAE060

Commissioning steps

Commissioning step		Comment
1.	Connect keypad to the diagnostic interface.	**You can also connect or remove the keypad during operation.**
2.	If the keypad is supplied with voltage, it carries out a short self test.	
3.	The keypad is ready for operation if it displays the main menu.	If you commission the keypad for the **first** time, you are requested to select the dialog language.
4.	You can now communicate with the basic device.	How to navigate through the menus and how to view and alter parameters can be learned here: 🕮 LEERER MERKER

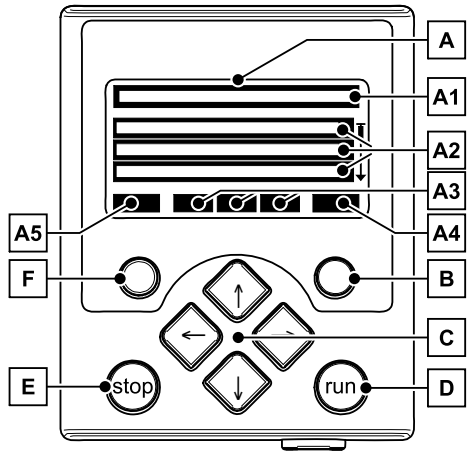

E94AZKAE003

Display		Meaning	Comment
A	**LCD display**		
A1	**Headline**		
	<MMM>	Meaning of the menu	In the menu level only
	<PPP>	Meaning of the parameter	In the parameter level only
A2	**Triple-spaced display**		
	<M1> <M2> <...>	List of the menus available	In the menu level only
	<P1> <P2> <...>	List of the parameters available	In the parameter level only
	<xxx>	Setting of the selected parameter	
A3	**Status of the basic device**		
	RDY	The basic device is ready for operation.	
	RUN	The basic device is enabled.	
	STP	Application in the basic device is stopped.	
	QSP	Quick stop active	
	CINH	The basic device is inhibited.	The power outputs are inhibited.
	OFF	The basic device is ready to start.	
	Mmax	Speed controller 1 in the limitation	The drive is torque-controlled.
	Imax	Set current limit exceeded in motor or generator mode	
	IMP	Pulse inhibit active	The power outputs are inhibited.
	ISYST	System error active	
	IFLT	Error active	
	ITRB	Fault active	
	ITQSP	Quick stop by trouble active	
	WRN	Warning active	
A4	**Current function of the right function key**		
	OK	Confirm and accept changes	
	HELP	Call up help	Is only displayed if a detailed help is available.
	NEXT	Browse to the next page.	
A5	**Current function of the left function key**		
		Back to the main menu	
	SAVE	Save parameter set in the drive non-volatilely.	
	EDIT	Alter parameter	
	ESC	Cancel action without accepting the change.	
	PREV	Browse to the previous page.	
	PLC!!	Parameter can only be altered if the application of the basic device is stopped.	
	CINH!!	Parameter can only be altered if the basic device is inhibited.	

Key		Function	Comment
B	○	Carry out the function indicated in the field A4.	
D	run	Deactivate the function of the stop key. The LED in the stop key goes out.	
E	stop	Carry out the function selected in C00469 in the "Keypad" menu. The LED in the key is on.	Lenze setting: activate quick stop.
F	○	Carry out the function indicated in the field A5.	

Key		Function				
		Menu level		Parameter level		
		Main menu	Submenu	Overview (9400)	Detail	Editing mode
C	⇳	Select menu	Select submenu	Select parameter		Alter selected digit
	⇨	To the submenu	To the parameter level	To the detail view		Cursor to the right
	⇦		Back to the main menu	Back to the menu level	Back to the overview	Cursor to the left

Operation

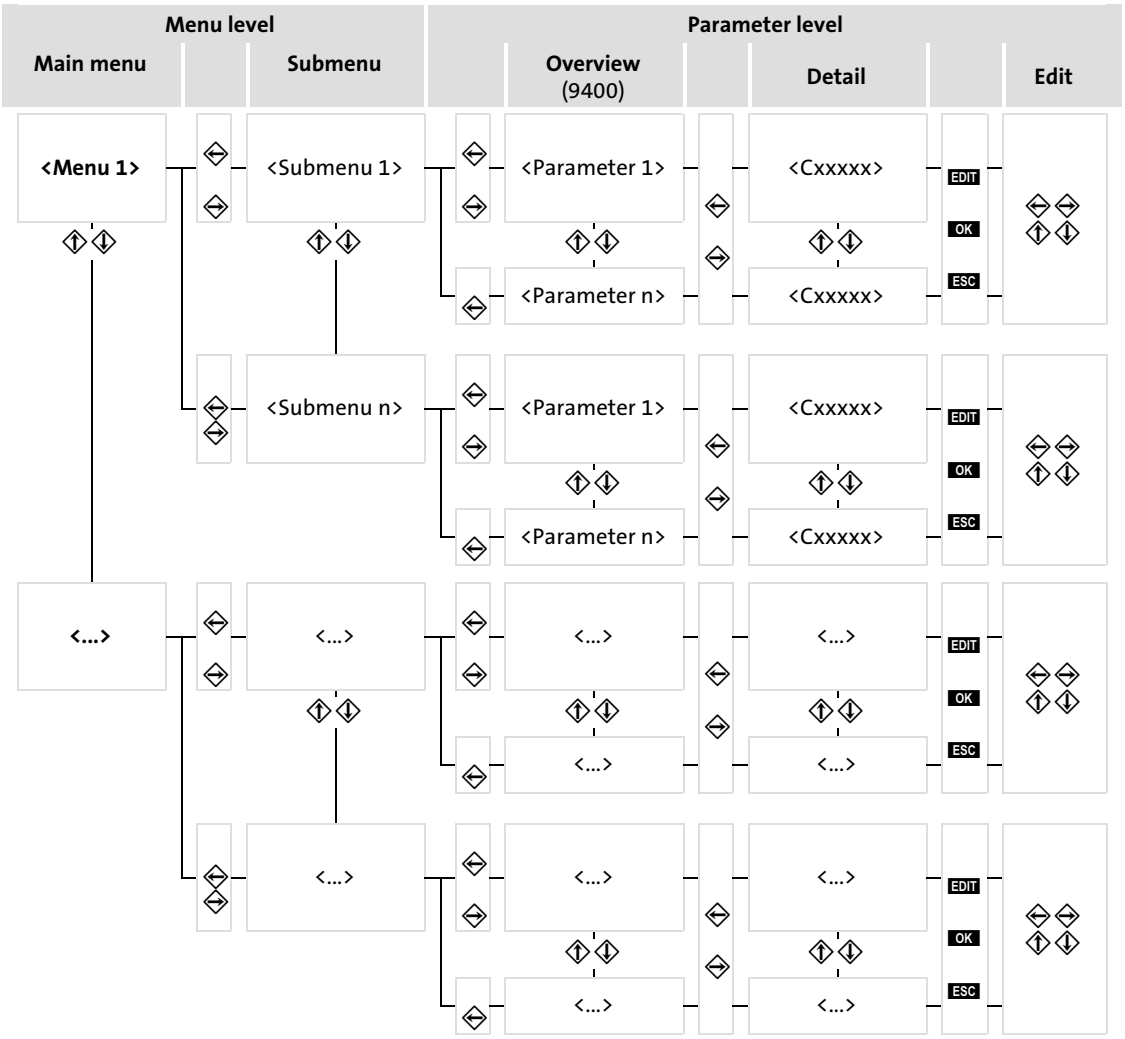
Menu level
Parameter level
Main menu
Submenu
Overview (9400)
Detail
Edit
<Menu 1>
<Submenu 1>
<Parameter 1>
<Cxxxxx>
<Parameter n>
<Cxxxxx>
<Submenu n>
<Parameter 1>
<Cxxxxx>
<Parameter n>
<Cxxxxx>
<...>
<...>
<...>
<...>
<...>
<...>
<...>
<...>
EDIT
OK
ESC

In the main menu, you'll find the self-explanatory "Keypad" menu.

In the "Keypad" menu, you'll find parameters by means of which you can adapt the keypad to your needs:

- Settings for the LCD display:
  - Duration and brightness of the background lighting
  - Contrast
- Starting values:
  - Display after the initialisation
  - Display of error messages
  - Representation of integers
- Function of the STOP key

In the "Keypad" menu, you can also call up status information on the keypad:

- Manufacturing data
- Hardware version and software version
- Serial number

8.8.3 Hand-held terminal

Scope of supply

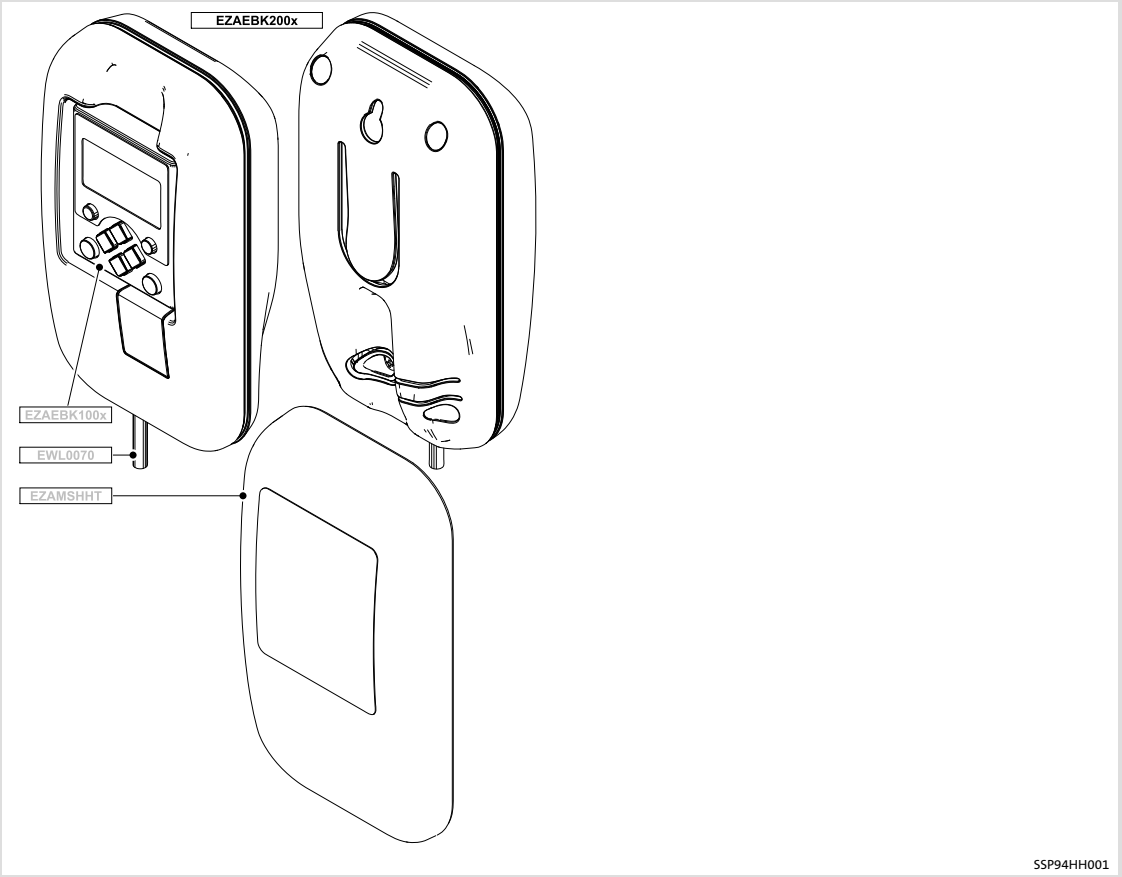

Connection

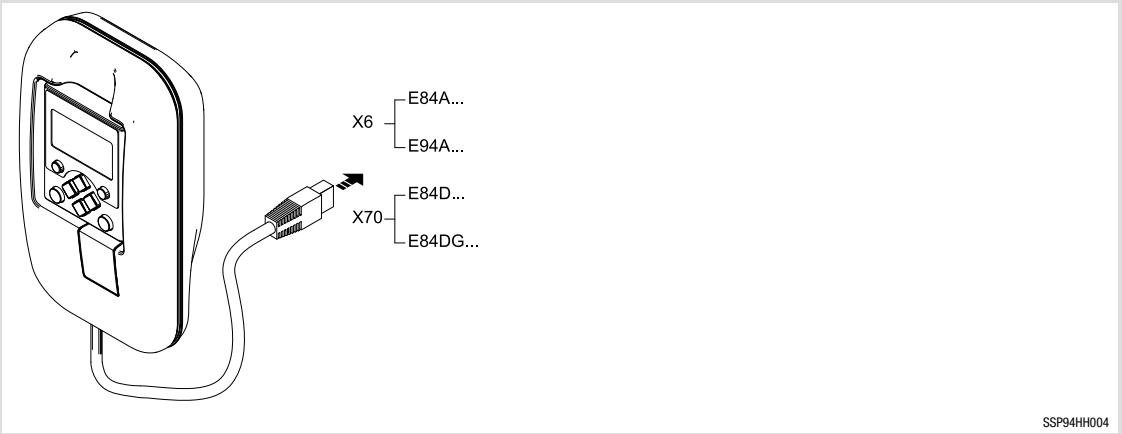

Dimensions

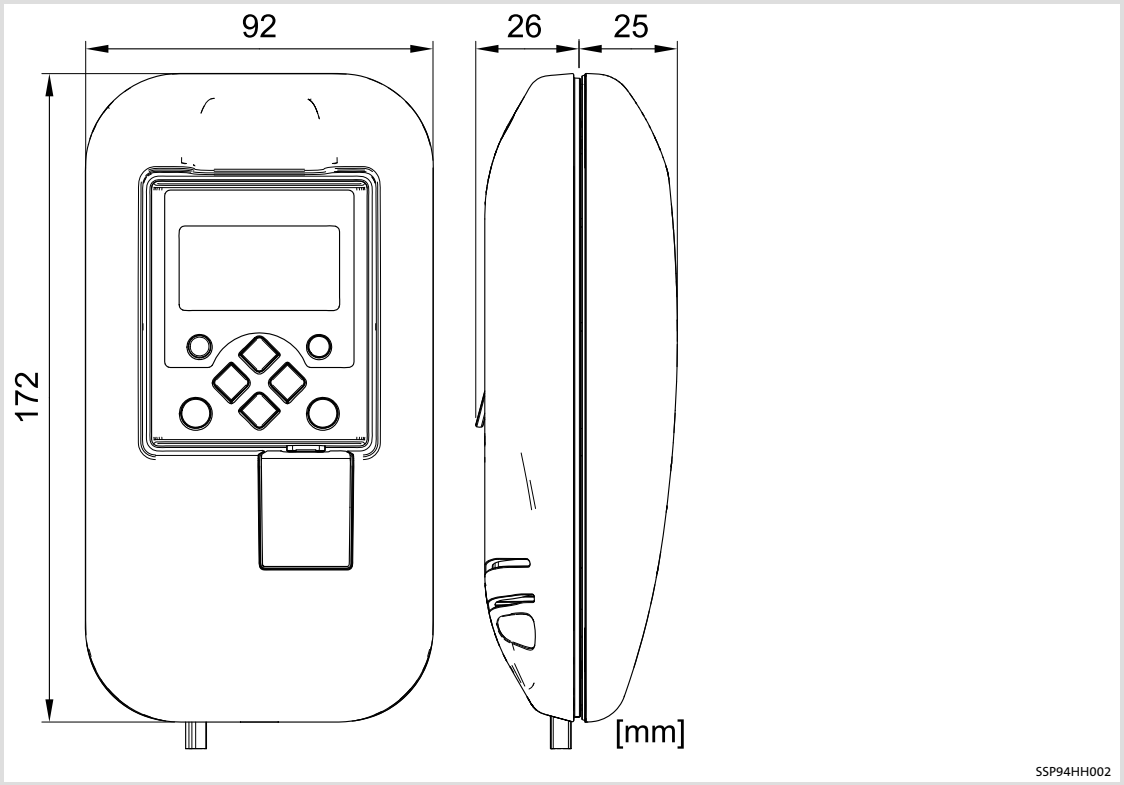

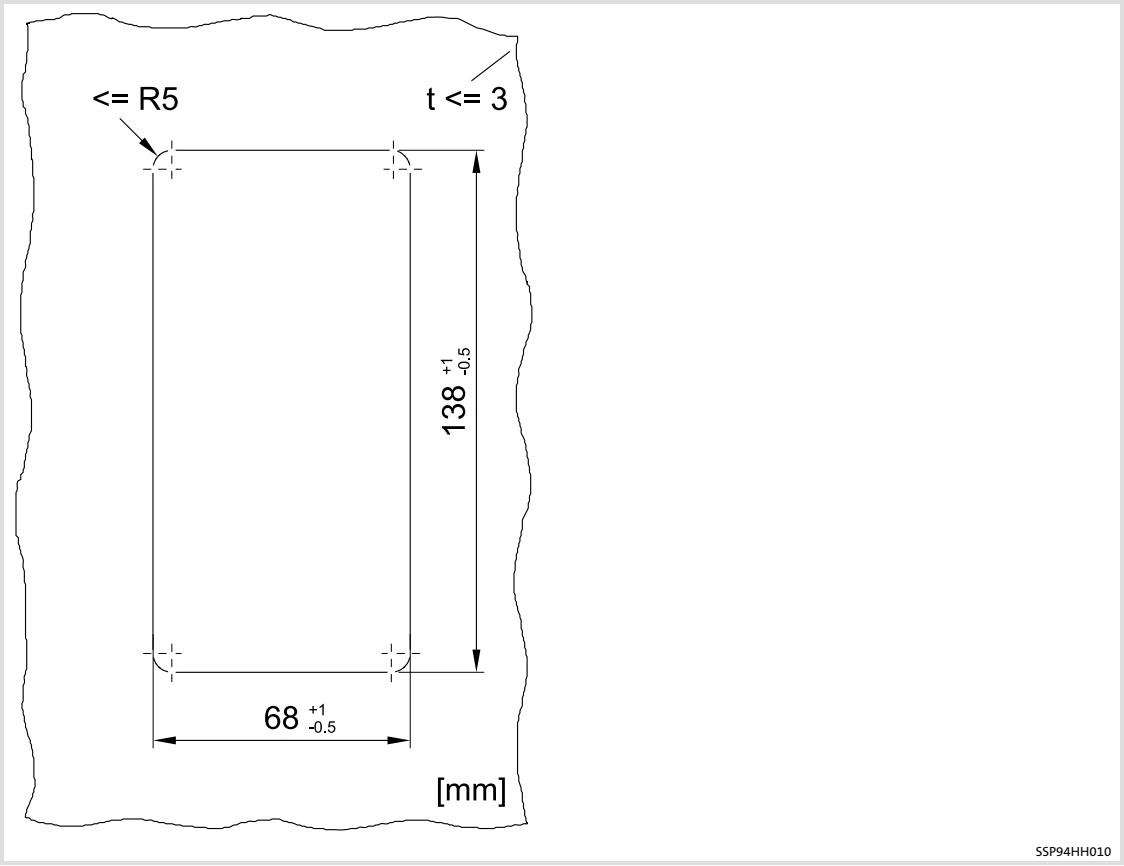

Installation steps

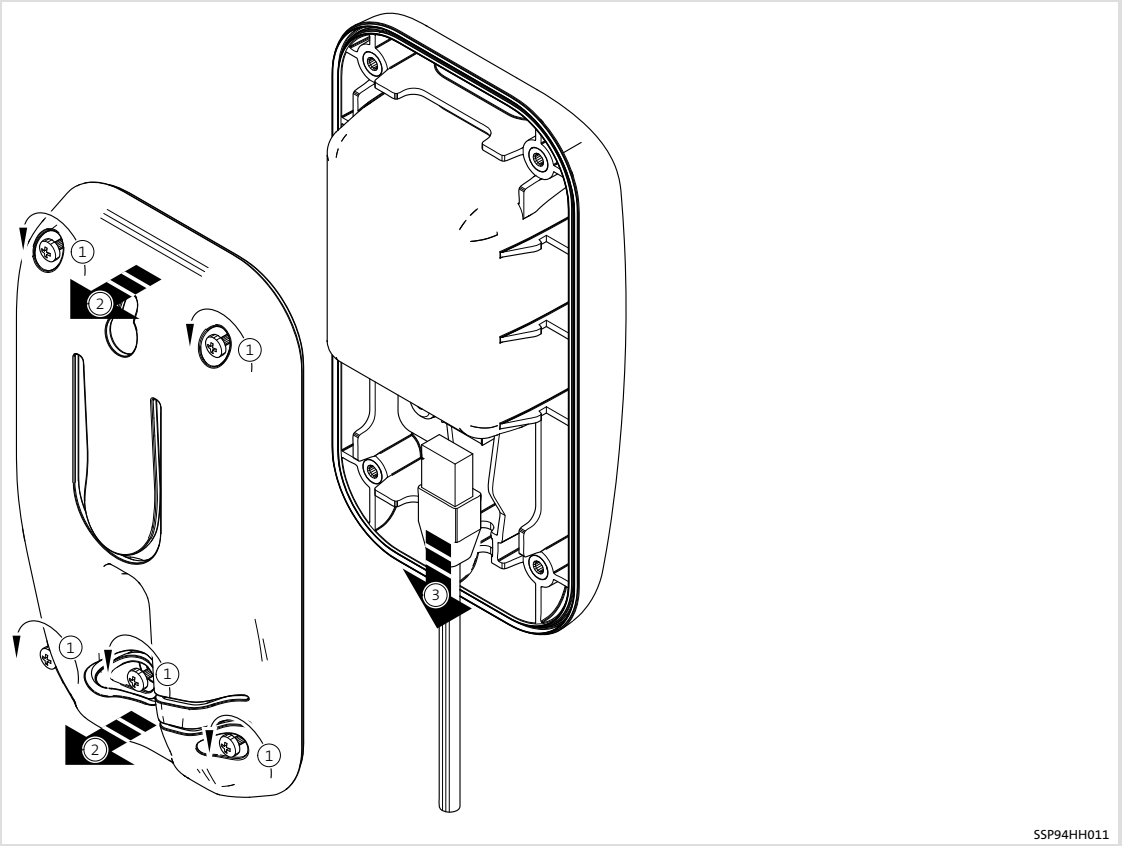

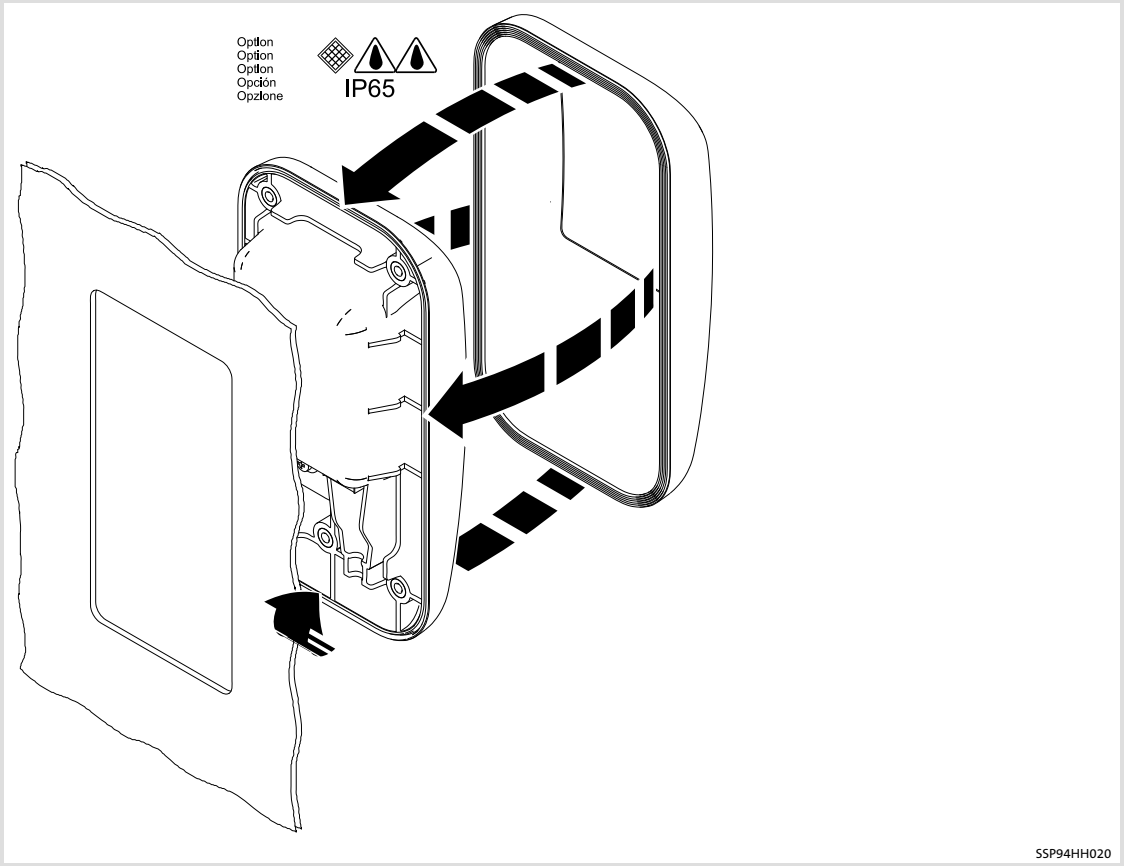
Option
Option
Option
Opción
Opzione
IP65
SSP94HH020

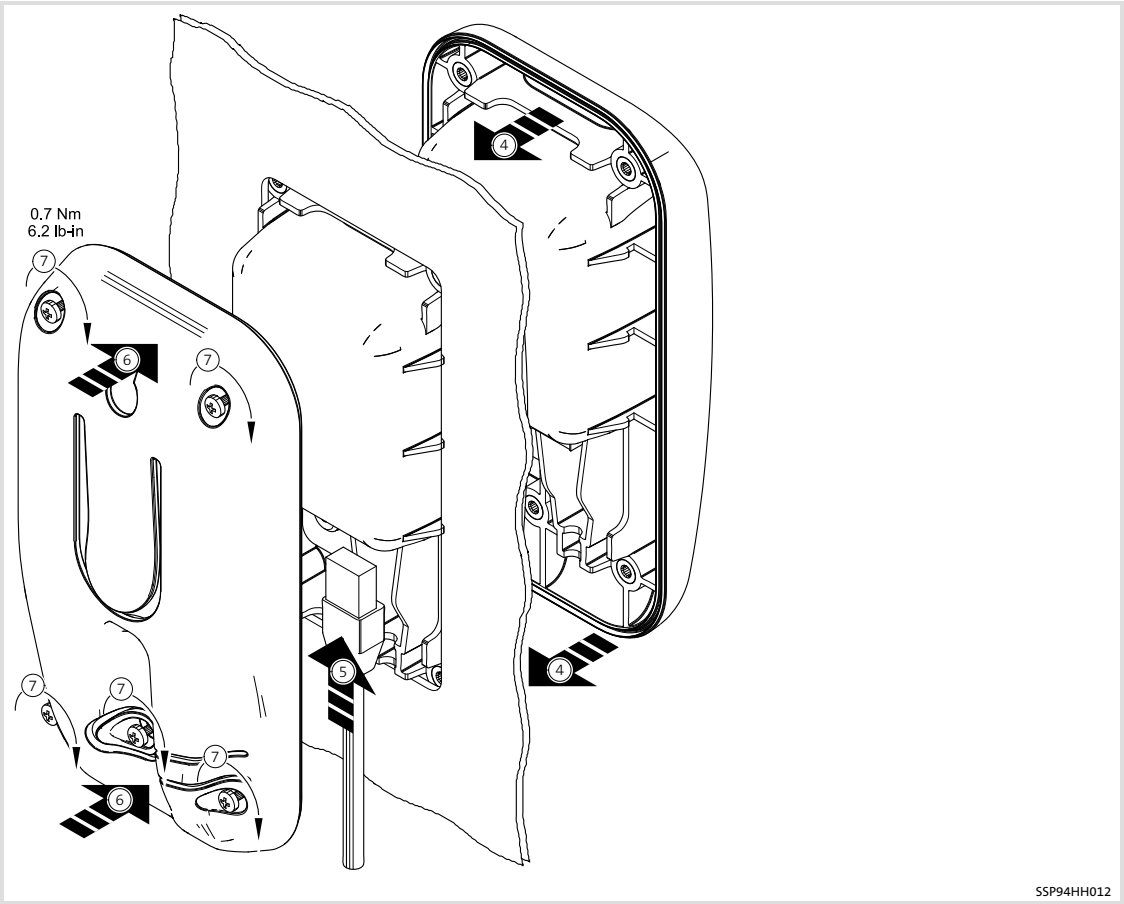
0.7 Nm
6.2 lb-in
4
4
5
6
6
7
7
7
7
7
SSP94HH012

8.9 Components for operation in the DC-bus connection

8.9.1 DC-feeding point

Identification

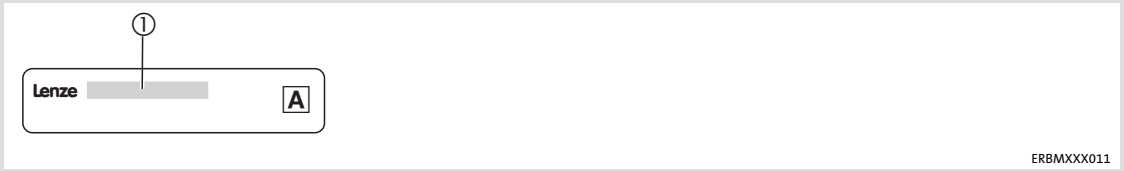

Type code	①					
	E94	A	Z	E	X	100

Product range

Device generation

Accessories

Type
E = input module

Rated current
100 = 100 A

Elements

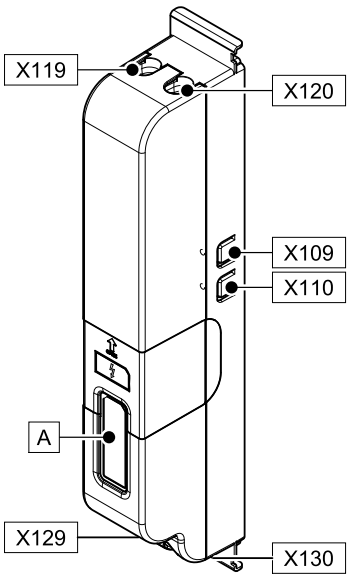

Pos.	Description
A	Nameplate
X109	+UG busbar input
X110	-UG busbar input
X119	+UG cable input
X120	-UG cable input
X129	+UG cable output
X130	-UG cable output

Standards

Conformity and approval			
Conformity			
CE	2014/35/EU	Low-Voltage Directive	
CE	2014/30/EU	EMC Directive	
EAC	TP TC 004/2011 (TR CU 004/2011)	On safety of low voltage equipment	Eurasian Conformity TR CU: Technical Regulation of Customs Union
EAC	TP TC 020/2011 (TR CU 020/2011)	Electromagnetic compatibility of technical means	Eurasian Conformity TR CU: Technical Regulation of Customs Union
Approval			
$_{C}UL_{US}$	UL61800-5-1	Power Conversion Equipment (File No. E132659) for USA	
	CSA C22.2 No. 274-13	Power Conversion Equipment (File No. E132659) for Canada	

Operating conditions

Environmental conditions		
Climate		
Storage	IEC/EN 60721-3-1	1K3 (-25 ... +60 °C)
Transport	IEC/EN 60721-3-2	2K3 (-25 ... +70 °C)
Operation	IEC/EN 60721-3-3	3K3 (-10 ... +55 °C) Current derating from +45 ... +55 °C: 2.5 %/°C
Site altitude		0 ... 4000 m amsl 1000 ... 4000 m amsl: current derating of 5 %/1000 m
Pollution	EN 61800-5-1	Degree of pollution 2
Vibration resistance (9.81 m/s² = 1 g)		
Transport	IEC/EN 60721-3-2	2M2
	EN 61800-2	2 ... 9 Hz: Amplitude 3.5 mm
		10 ... 200 Hz: acceleration resistant up to 10 m/s²
		200 ... 500 Hz: acceleration resistant up to 15 m/s²
Operation	Germanischer Lloyd	5 ... 13.2 Hz: Amplitude ±1 mm 13.2 ... 100 Hz: acceleration resistant up to 0.7 g
	IEC/EN 60068-2-6	10 ... 57 Hz: Amplitude 0.075 mm
		57 ... 150 Hz: Acceleration resistant up to 1 g

Protection		
Enclosure	EN 60529	IP 20
	NEMA 250	Protection against accidental contact acc. to type 1
Insulation resistance	EN 61800-5-1	Overvoltage category III Reduction from 2000 m: Overvoltage category II

Rated data

Mains	Voltage U_{DC} [V]	Voltage range U_{DC} [V]	Frequency range f [Hz]
2/PE DC	325	260 - 0 % ... 370 + 0 %	-
2/PE DC	565	455 - 0 % ... 620 + 0 %	-
2/PE DC	675	480 - 0 % ... 746 + 0 %	-

	Voltage [V]	Frequency [Hz]	Rated current [A] up to +45 °C ①	 up to +55 °C ①	Number of phases
E94AZEX100	325/565/675	0 (DC)	100/100/100	100/100/100	-

① Temperature in the control cabinet

Safety instructions



Danger!

Hazardous electrical voltage

All power connections carry a hazardous electrical voltage for a longer time after mains disconnection. Observe the information regarding the discharge time on the device.

Possible consequences:

► Death or severe injuries when touching the power terminals.

Protective measures:

► Before working on the power connections, wait at least until the discharge time has passed (depending on the device, this may be up to 30 minutes).

► Make sure that all power terminals are deenergised.

► Implement active discharge, e.g. by:
– Connection of a discharge resistor when the mains contactor drops.

Safety instructions for the installation according to UL/CSA

Original - English



Warnings!

► Maximum surrounding air temperature: 55 °C

► Use 60/75°C copper wire only, except for control circuits.

► Use appropriate listed (ZMVV) wire connectors and soldering lugs, suitable for current and voltage.

Original - French

Avertissement !

- ► Température ambiante maximale : 55 °C
- ► Utiliser exclusivement des conducteurs en cuivre 60/75 °C, sauf pour les circuits de commande.
- ► Utiliser les connecteurs de câble et les cosses à souder indiqués (ZMVV), à sélectionner en fonction du courant et de la tension d'alimentation.

Dimensions

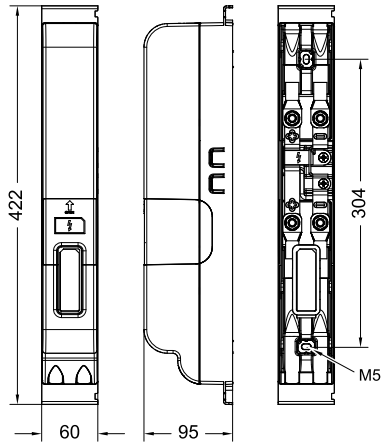

E94AZEX004

All dimensions in millimetres.

Type	Weight [kg]
E94AZEX100	0.9

Arrangement of the devices

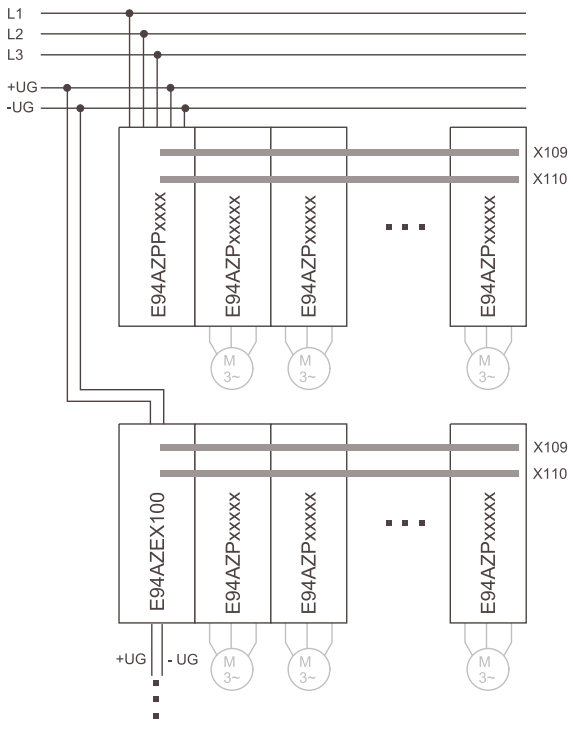

SSP94PN200

E94AZEX100	DC input module
E94AZPPxxxx	Installation backplane - 9400 DC power supply module
E94AZPxxxxx	Installation backplane - 9400 axis module

Installation steps

Note!

The place of installation and mounting material must ensure a permanent mechanical connection.

We recommend to keep to the hole patterns of the axis modules when fixing the DC input module. The hole spacing corresponds to device size I. For further information, please see the Mounting Instructions for the axis module installation backplane (EDK94ZPM113).

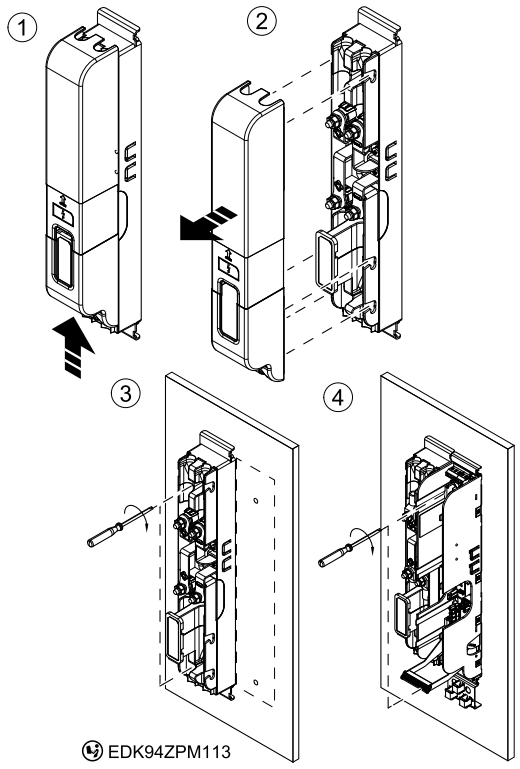

E94AZEX002

Connection plan

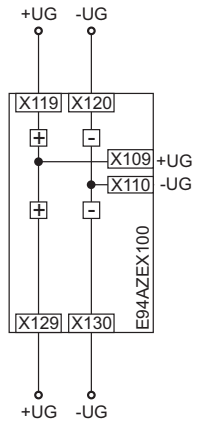

E94AZEX006

Electrical installation

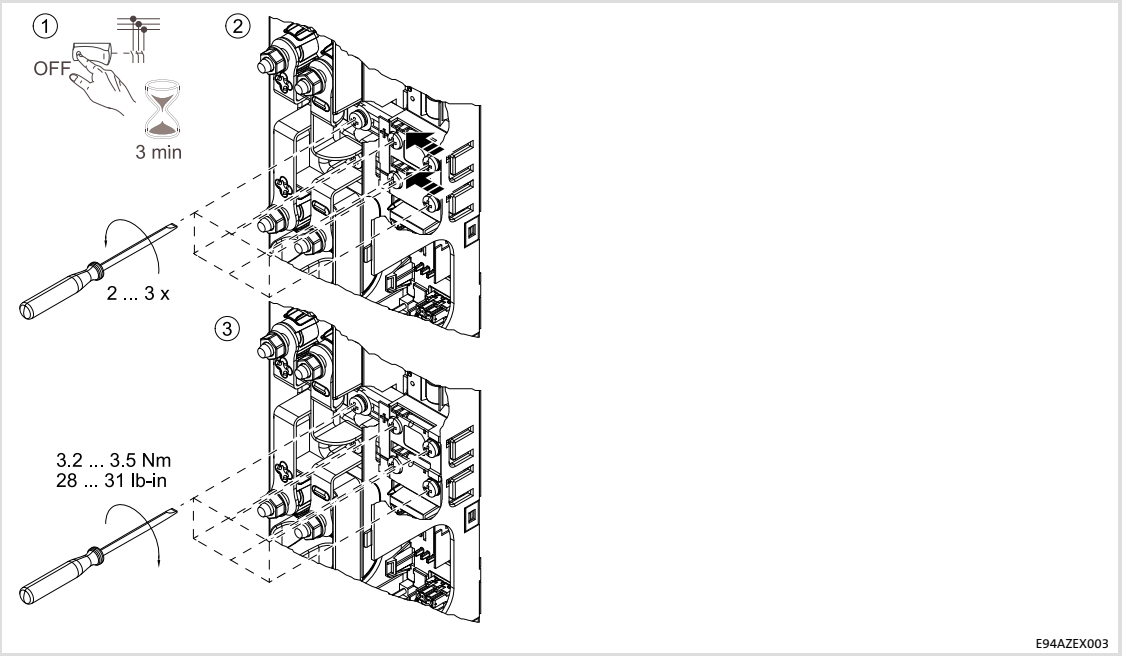

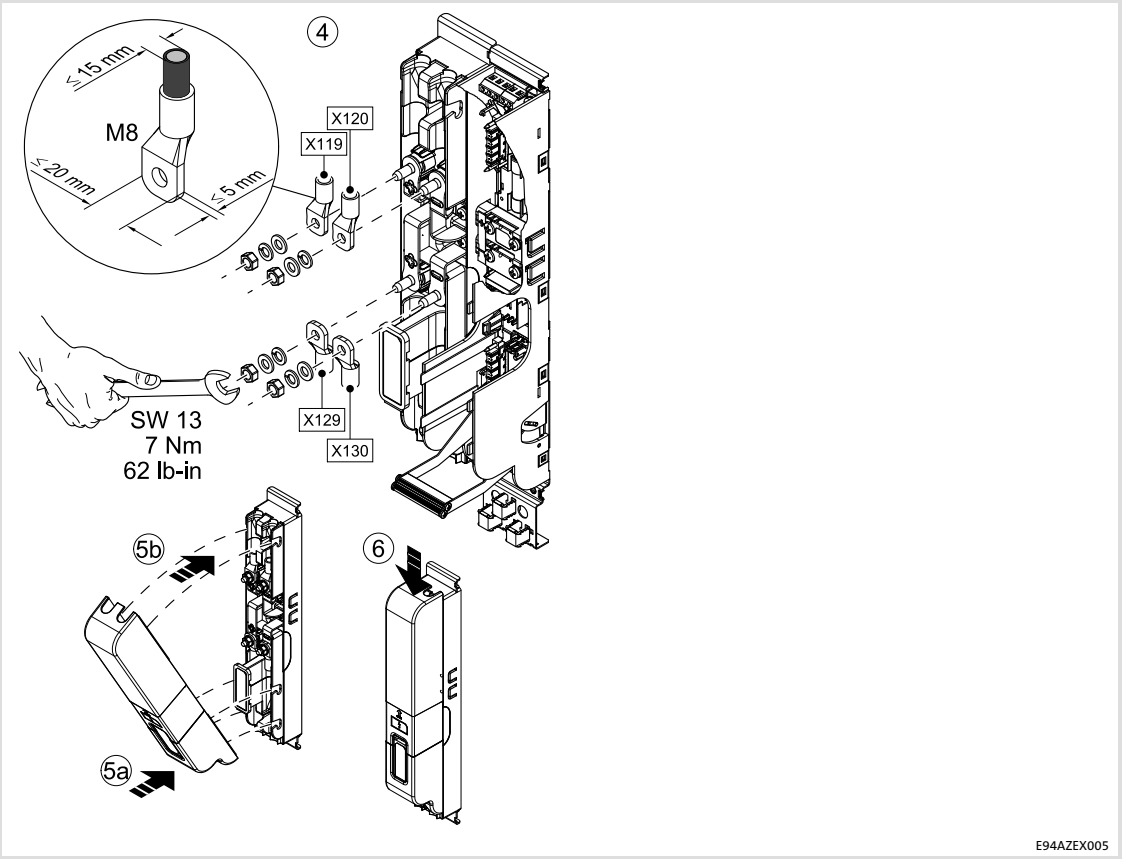

Terminal data

Terminal X119/X120/X129/X130	Labelling	Description
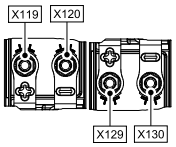 E94AZEX007	*/-	Threaded bolt for connecting the input and output cables (+UG, -UG) with M8 ring cable lug

Terminal data					
	Max. conductor cross-section		Tightening torque		
	[mm²]	[AWG]	[Nm]	[lb-in]	
E94AZEX100	50	1	7	62	SW13

Terminal X109/X110	Labelling	Description
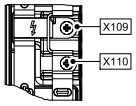 E94AZEX008	*/-	Busbar connection (+UG, -UG)

Terminal data					
	Max. conductor cross-section		Tightening torque		
	[mm²]	[AWG]	[Nm]	[lb-in]	
E94AZEX100	–	–	3.2 ... 3.5	28 ... 31	PH2

8.9.2 Busbar mounting set E94AZJA003

Elements

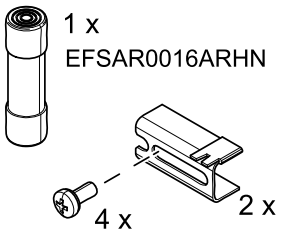

E94AZJA-001

Application range

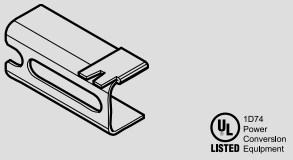	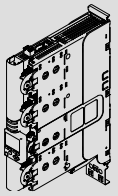
E94AZJA003	E94xSxE002x E94xSxE003x

Safety instructions for the installation according to UL/CSA

Original - English

Warnings!

The busbar mounting set needs to be installed in accordance with the Mounting Instructions of Lenze Power Conversion Equipment, E94 servo system.

Risk of electrical shock - Disconnect power supply before you start working with the busbar mounting set.

Original - French

Avertissement !

Le kit de montage de barres conductrices doit être utilisé conformément aux instructions de montage des convertisseurs de puissance Lenze, système servo E94.

Risque d’électrocution - Débrancher l’alimentation avant le début des travaux de montage des barres conductrices.

Installation steps

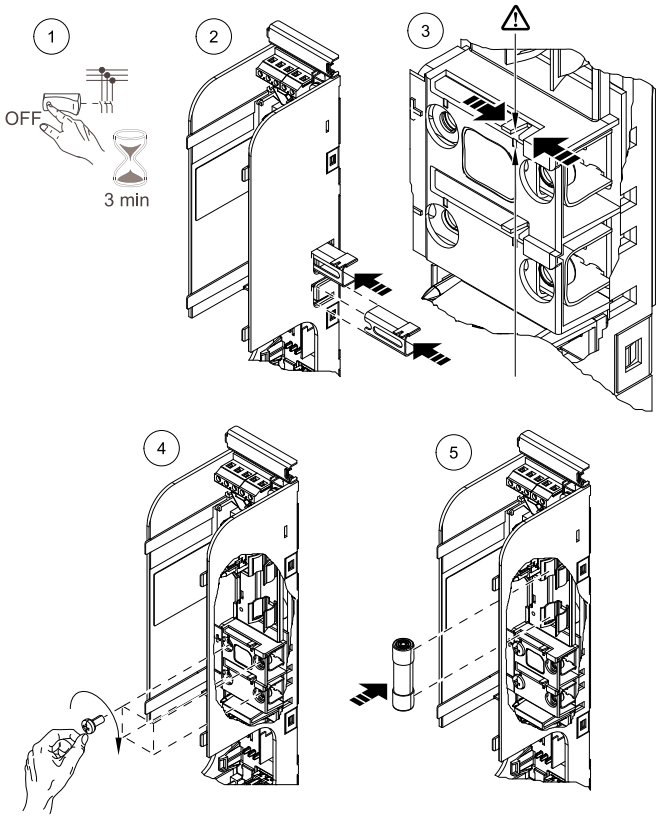

8.9.3 Busbar mounting set E94AZJA007

Elements

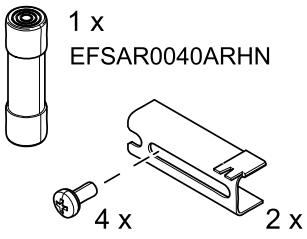

E94AZJA-011

Application range

	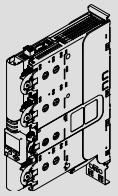
E94AZJA007	E94xSxE004x E94xSxE007x

Safety instructions for the installation according to UL/CSA

Original - English

Warnings!

The busbar mounting set needs to be installed in accordance with the Mounting Instructions of Lenze Power Conversion Equipment, E94 servo system.

Risk of electrical shock - Disconnect power supply before you start working with the busbar mounting set.

Original - French

Avertissement !

Le kit de montage de barres conductrices doit être utilisé conformément aux instructions de montage des convertisseurs de puissance Lenze, système servo E94.

Risque d’électrocution - Débrancher l’alimentation avant le début des travaux de montage des barres conductrices.

Installation steps

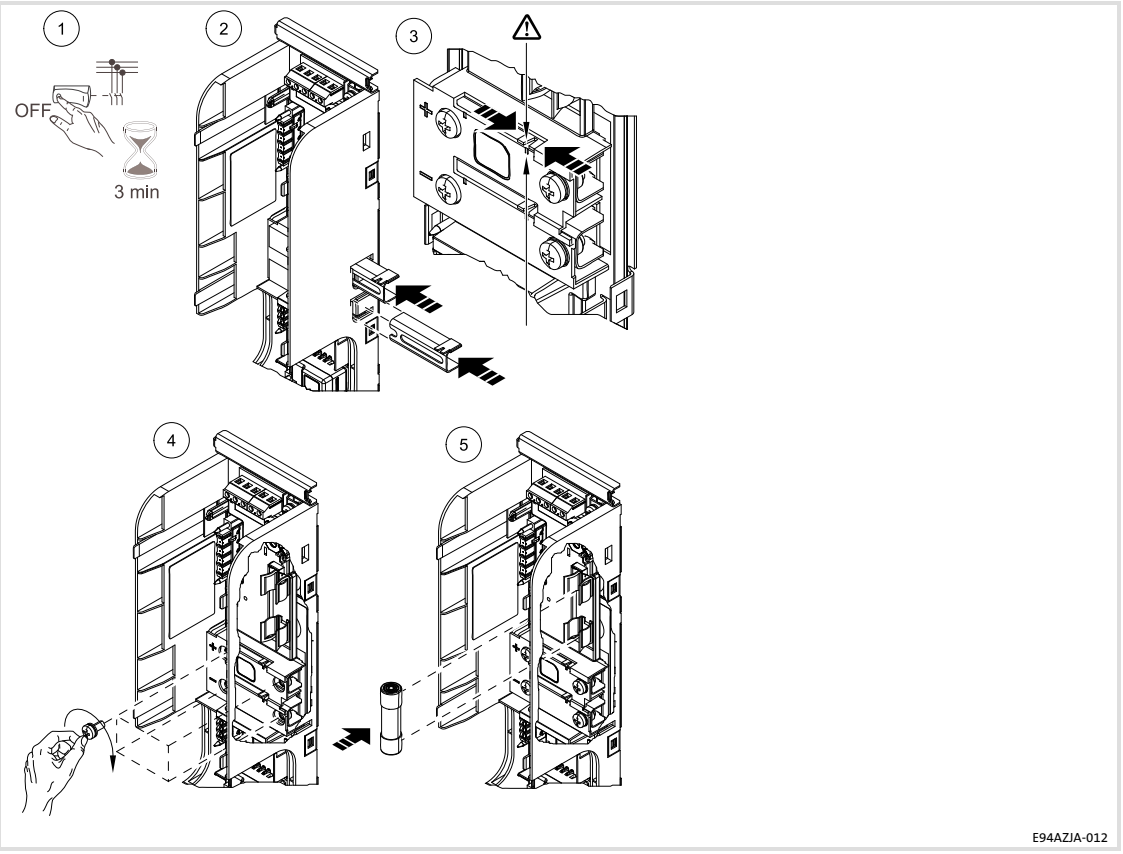

8.9.4 Busbar mounting set E94AZJA024

Elements

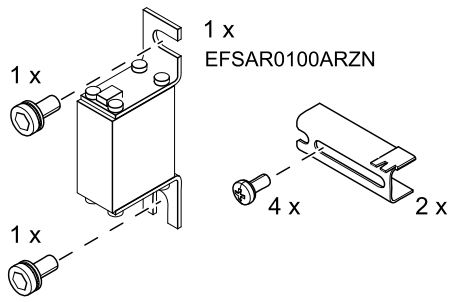

E94AZJA-021

Application range

	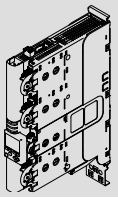
E94AZJA024	E94xSxE013x E94xSxE017x E94xSxE024x

Safety instructions for the installation according to UL/CSA

Original - English

Warnings!

The busbar mounting set needs to be installed in accordance with the Mounting Instructions of Lenze Power Conversion Equipment, E94 servo system.

Risk of electrical shock - Disconnect power supply before you start working with the busbar mounting set.

Original - French

Avertissement !

Le kit de montage de barres conductrices doit être utilisé conformément aux instructions de montage des convertisseurs de puissance Lenze, système servo E94.

Risque d’électrocution - Débrancher l’alimentation avant le début des travaux de montage des barres conductrices.

Installation steps

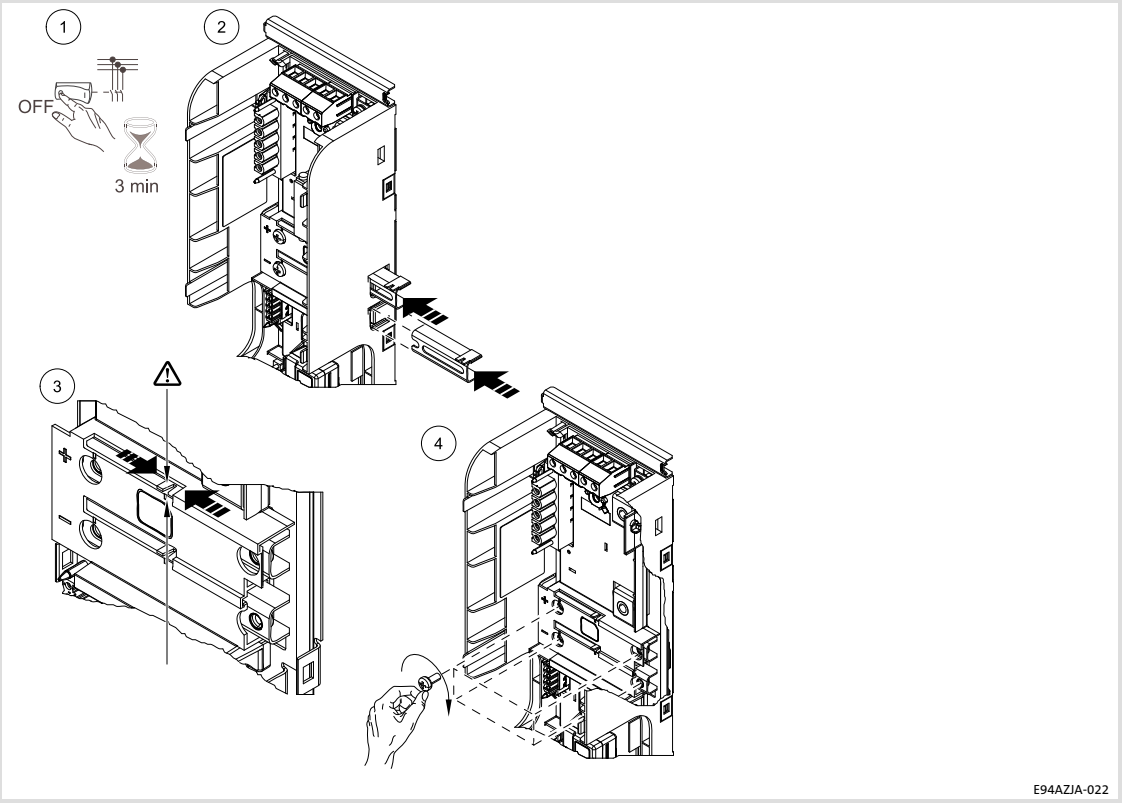

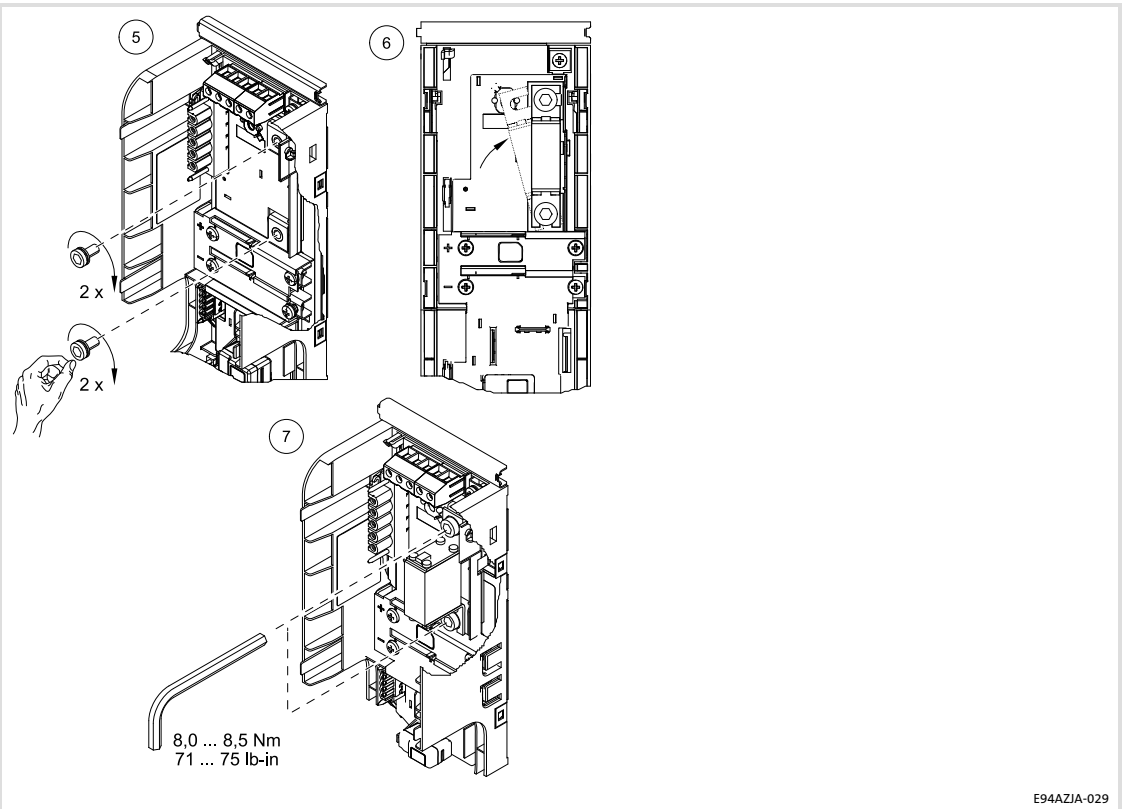

8.10 Filters

Advantages by the use of filters:

- Compliance with EMC requirements
- Reduction of the current load
- Positive effects on the service life of the controllers possible
  – Strong reliability
  – Reduction of the failure rate
- Operation on 30 mA residual-current circuit breakers for device sizes 1 ... 3 (up to 24 A/11 kW) is enabled.

Mains chokes:
Inductances for damping conducted harmonic interferences which may arise from reloading the DC bus and the switching frequency of the inverter.

RFI filters:
RFI filters are capacitive accessories for compliance with the requirements acc. to EN 61800-3 for conducted interference emission. RFI filters can be directly connected upstream of the power supply modules. RFI filters are also called EMC filters.

Mains filters:
Mains filters reduce the conducted interference emission into the mains for compliance with the requirements acc. to EN 61800-3. Mains filters are a combination of mains choke and RFI filter in one housing.

A sinusoidal filter (LC filter) in the motor cable limits the rate of rise of voltage (du/dt < 500 V/µs) and the capacitive charge/discharge currents which occur during inverter operation. This enables considerably larger shielded motor cables and the service life of the motor is increased.

Accessories	Single Drive			Multi Drive		Power supply modules		VR modules	
Field	GG (device size)			GG		GG		GG	
Designation	1 ... 3	6 ... 7	81 ... 91	1 ... 3	6	1 & 3	4 & 5	1 & 3	Page
Filters									
Mains filter									
E94AZMSxxxx 3 ... 31 A	+	+	---	---	---	---	---	---	536
E94AZMSxxxx 180 ... 415 A (3F480-xxx.290EM)	---	---	+	---	---	---	---	---	579
E94AZMPxxxx 8 ... 29 A	---	---	---	---	---	+	+	---	543
E94AZMPxxxx 82 ... 200 A	---	---	---	---	---	+	+	---	550
E94AZMRxxxx 26 ... 47 A	---	---	---	---	---	---	---	+	558
RFI filter									
E94AZRSxxxx 4 ... 29 A	+	+	---	---	---	---	---	---	565
E94AZRSxxxx 54 ... 95 A	+	+	---	---	---	---	---	---	572
E94AZMSxxxx 180 ... 415 A (3F480-xxx.290EM)	---	---	+	---	---	---	---	---	579
E94AZRPxxxx 8 ... 29 A	---	---	---	---	---	+	+	---	583
E94AZRPxxxx 82 ... 200 A	---	---	---	---	---	+	+	---	590
Sine filter									
EZS3-xxxA200 4 ... 90 A	+	+	-	-	-	---	---	---	597
EZS3-xxxA200 115 ... 150 A	+	+	-	-	-	---	---	---	605
EZS3-xxxA200 180 ... 480 A	+	+	-	-	-	---	---	---	611

1)	Component from this range is absolutely necessary
+	Can be used without restrictions
o	Can be used with restrictions
-	Can be used, but check alternative
^	Already included
---	No use

8.10.1 Mains filters for single-axis controllers E94AZMSxxxx 3 ... 31 A

Assignment of filters to standard devices

Mains filter type	Single-axis controller type	Device size
E94AZMS0034	E94xSxE002x	1
	E94xSxE003x	
E94AZMS0094	E94xSxE004x	2
	E94xSxE007x	
E94AZMS0184	E94xSxE013x	3
	E94xSxE017x	
E94AZMS0314	E94xSxE024x	

Elements on the filter

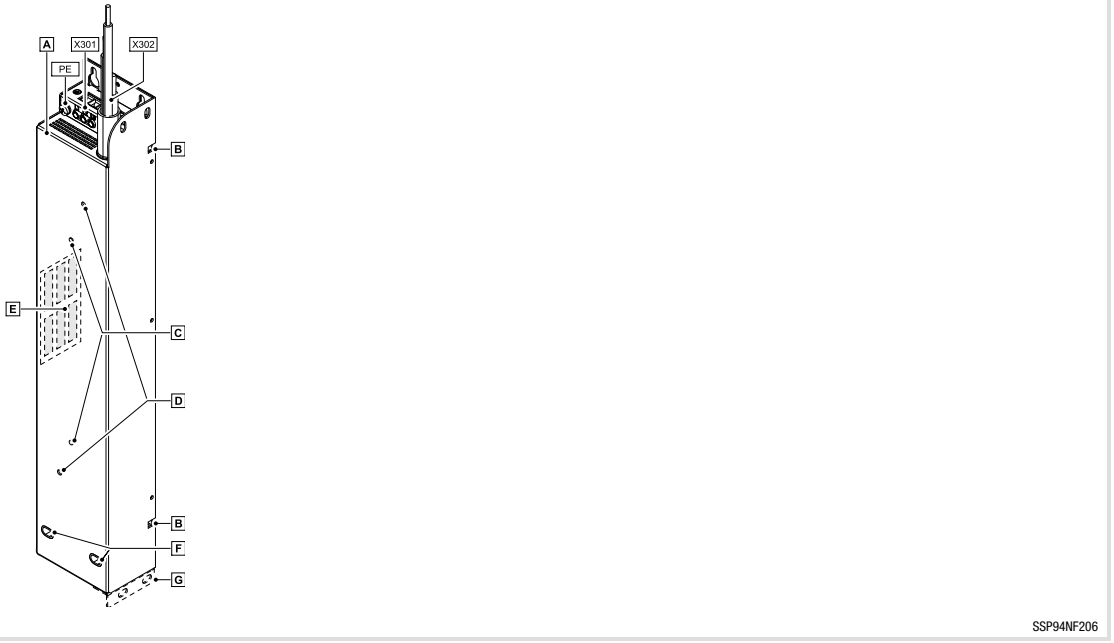

Pos.	Description
A	Mains filter E94AZMSxxxx
	Mounting Instructions

Pos.	Description
PE	PE connection (for M5 ring or fork-type cable lug)
X301	Mains terminal L1 ... L3
X302	Connection cable to controller, 4-core
B	Mounting aid for mounting base
C	Guide pins for mounting base
D	Mounting thread for mounting base
E	Nameplate
F	Fastening at the bottom
G	Angle bracket for "side-by-side" mounting variant, device sizes 2 and 3

Identification

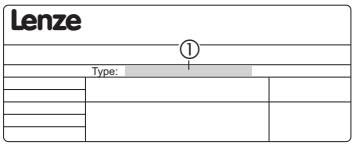

SSP94NF002

	①						
Type code	**E94**	**A**	**Z**	**M**	**S**	**xxx**	**x**
Product range							
Version							
accessories							
Mains filter type							
for 9400 Single Drive							
Rated current [A]							
Voltage class 4 = 230 ... 400/480 V							

General data

Conformity and approval			
Conformity			
EAC	TP TC 004/2011 (TP ZU 004/2011)	Regarding the safety of low-voltage equipment	Eurasian conformity TR ZU: Technical regulation of the tariff union
EAC	TP TC 020/2011 (TP ZU 020/2011)	Electromagnetic compatibility of technical products	Eurasian conformity TR ZU: Technical regulation of the tariff union
Approval			
$_{C}UR_{US}$	UL508 CSA C22.2 No.14	Industrial Control Equipment, Underwriter Laboratories (File-No. E219022) for USA and Canada	

Mains data	
Mains types	
With grounded neutral (TT/TN systems)	Operation permitted without restrictions
Other mains types	Observe instructions for special measures in the documentation for the basic device!

Protection of persons and equipment			
Enclosure	EN 60529	IP20	Not in the wire range of the terminals
	NEMA 250	Protection against contact to type 1	
Earth leakage current	IEC/EN 61800-5-1	> 3.5 mA AC > 10 mA DC	Observe regulations and safety instructions!
Insulation resistance	IEC/EN 61800-5-1	< 2000 m site altitude: overvoltage category III	
		> 2000 m site altitude: overvoltage category II	

Environmental conditions		
Climate		
Storage	IEC/EN 60721-3-1	1K3 (-25 ... +60 °C)
Transport	IEC/EN 60721-3-2	2K3 (-25 ... +70 °C)
Operation	IEC/EN 60721-3-3	3K3 (-10 ... +55 °C) Current derating from +45 ... +55 °C: 2.5 %/°C
Site altitude		0 ... 4000 m amsl 1000 ... 4000 m amsl: current derating of 5 %/1000 m
Pollution	EN 61800-5-1	Degree of pollution 2
Vibration resistance (9.81 m/s² = 1 g)		
Transport	IEC/EN 60721-3-2	2M2
	EN 61800-2	2 ... 9 Hz: Amplitude 3.5 mm
		10 ... 200 Hz: acceleration resistant up to 10 m/s²
		200 ... 500 Hz: acceleration resistant up to 15 m/s²
Operation	Germanischer Lloyd	5 ... 13.2 Hz: Amplitude ±1 mm 13.2 ... 100 Hz: acceleration resistant up to 0.7 g
	IEC/EN 60068-2-6	10 ... 57 Hz: Amplitude 0.075 mm
		57 ... 150 Hz: Acceleration resistant up to 1 g

Mounting conditions		
Mounting place		In the control cabinet
Mounting position		Vertically
Free space		The required free space results from the mounting position and the specifications of the standard device.
Mounting position		
Standard		Footprint mounting; standard device is screwed on the filter
Variant		Side-by-side mounting; filter is directly screwed to the left of the standard device (📖Mechanical installation)

Rated data

Mains	Voltage U_{Lrated} [V]	Voltage range U_{Lrated} [V]	Frequency range f [Hz]
3/PE AC	230	180 - 0 % ... 264 + 0 %	45 - 0 % ... 65 + 0 %
3/PE AC	400	320 - 0 % ... 440 + 0 %	45 - 0 % ... 65 + 0 %
3/PE AC	480	340 - 0 % ... 528 + 0 %	45 - 0 % ... 65 + 0 %

	Voltage [V]	Freq. [Hz]	Current [A] ① max. +45° C	Current [A] ① max. +55° C	Number of phases
E94AZMS0034	230/400/480	50/60	3.2/3.2/3.2	2.0/2.0/2.0	3
E94AZMS0094	230/400/480	50/60	9.0/9.0/9.0	5.6/5.6/5.6	3
E94AZMS0184	230/400/480	50/60	18/18/18	11/11/11	3
E94AZMS0314	230/400/480	50/60	31/31/31	19/19/19	3

① Temperature in the control cabinet

	Power loss P_{loss} [W]	Inductance L [mH]	Voltage drop ΔU [V]
E94AZMS0034	15	10	10
E94AZMS0094	23	3.5	10
E94AZMS0184	38	1.1	7.4
E94AZMS0314	48	0.75	7.3

Dimensions

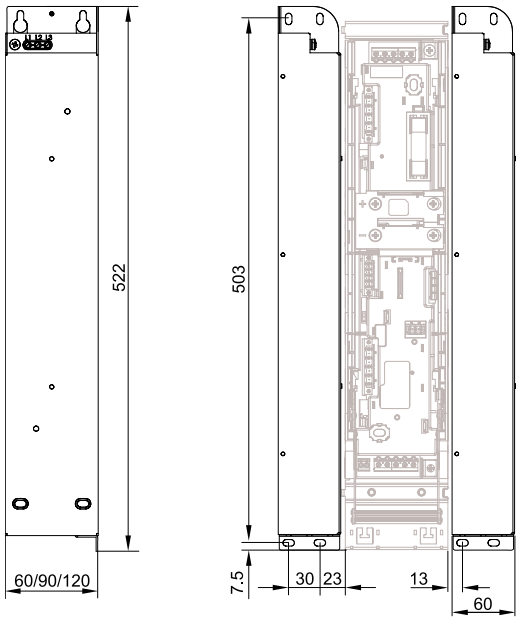

All dimensions in millimetres.

	Mass [kg]
E94AZMS0034	3.2
E94AZMS0094	5.2
E94AZMS0184	8.4
E94AZMS0314	8.8

Mechanical installation

Note!

The filter can be mounted in two different variants. This results in differing mounting dimensions.

- ► Standard mounting
  - – The filter is mounted below the mounting base of the basic device. The grid hole pattern of the L-force 9400 device series can be used.
- ► Side-by-side mounting for small control cabinet depth
  - – Device size I: The filter is mounted left to the basic device. The grid hole pattern of the L-force 9400 device series can be used.
  - – Device sizes II and III: The filter is turned by 90° and mounted left to the basic device. The grid hole pattern of the L-force 9400 device series cannot be used.

For information on this topic, please see the corresponding mounting instructions.

Electrical installation

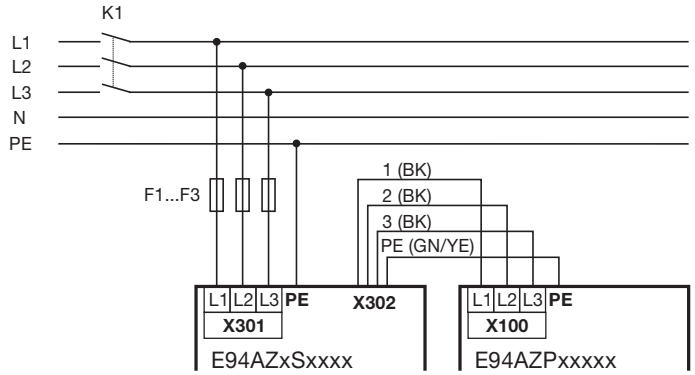

Mains

Terminal X301	Labelling	Description
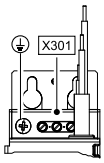 SSP94FF008	L1 L2 L3	Connection of the mains phases L1, L2, L3
	⏚	Connection for the supply-side PE conductor with M5 ring cable lug

Terminal data

	Max. conductor cross-section		Tightening torque		
	[mm²]	[AWG]	[Nm]	[lb-in]	
E94AZMS0034	2.5	14	0.5 ... 0.6	4.4 ... 5.3	PH1
E94AZMS0094	4	12			
E94AZMS0184	10	8	1.2 ... 1.5	10.6 ... 13.3	
E94AZMS0314					

PE connection data

	∅	Starting torque		
	[mm]	[Nm]	[lb-in]	
E94AZMS0034	M5	3.0	26.5	SW 8
E94AZMS0094				
E94AZMS0184				
E94AZMS0314				

Standard device

Cable X302	Labelling	Description
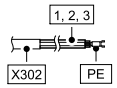 SSP94FF007	1 2 3	Filter output conductor (lead with wire end ferrule, colour BK)
	PE	Output-side PE conductor (lead with M5 fork-type cable lug, colour GN/YE)

Safety instructions for the installation according to UL/CSA

Original - English

Warnings!

Conditions of Acceptability:

- The products covered by this report are only intended for use with Power Conversion Equipment (inverters).
- Consideration shall be given to the field wiring leads. No strain relief test was performed on the leads.
- The devices in this report are only evaluated for factory wiring use.
- Temperature tests were performed with hook mounted drive.

Original - French

Avertissement !

Conditions d'acceptabilité :

- Les produits concernés par ce rapport sont destinés exclusivement à être utilisés avec des convertisseurs de puissance (variateurs ou power conversion equipment).
- Une attention particulière doit être apportée aux tresses de câblage à pied d'oeuvre. Aucun test de décharge de traction n'a été réalisé sur ces éléments.
- Les équipements concernés par ce rapport sont évalués exclusivement pour un câblage en usine.
- Les tests de température ont été réalisés avec un entraînement à crochet.

8.10.2 Mains filters for power supply modules E94AZMPxxxx (8 ... 29 A)

Assignment of filters to standard devices

Mains filter		DC power supply module	
Type	Device size	Type	Device size
E94AZMP0084	2	E94APNE0104	1
E94AZMP0294	3	E94APNE0364	3
E94AZMP0294	3	E70ACPSx0304x	1

Elements on the filter

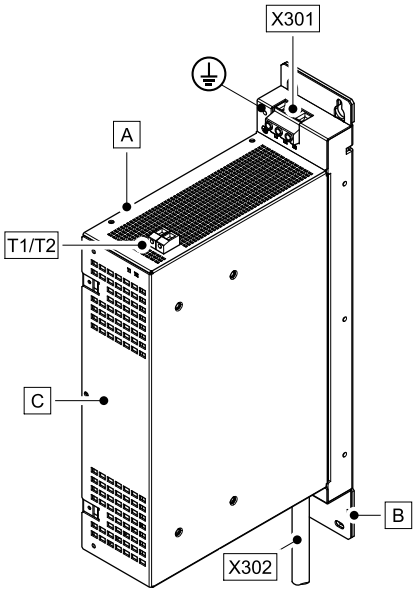

SSP94NF101

Pos.	Description
A	Mains filter E94AZMPxxxx
	Mounting Instructions

Pos.	Description
⏚	Connection of PE conductor
X301	Mains terminal L1 ... L3
X302	Connection cable to DC power supply module, four-core
T1/T2	Thermal contact terminal T1, T2
B	Mounting aid for installation backplane
C	Nameplate

Identification

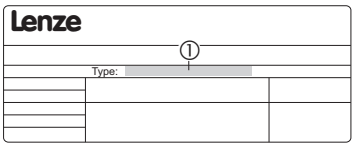

SSP94NF002

	①						
Type code	**E94**	**A**	**Z**	**M**	**P**	**xxx**	**x**
Product range							
Version							
accessories							
Mains filter type							
for 9400 power supply							
Rated current [A]							
Voltage class 4 = 230 ... 400/480 V							

General data

Conformity and approval			
Conformity			
EAC	TP TC 004/2011 (TP ZU 004/2011)	Regarding the safety of low-voltage equipment	Eurasian conformity TR ZU: Technical regulation of the tariff union
EAC	TP TC 020/2011 (TP ZU 020/2011)	Electromagnetic compatibility of technical products	Eurasian conformity TR ZU: Technical regulation of the tariff union
Approval			
$_{C}UR_{US}$	UL508 CSA C22.2 No.14	Industrial Control Equipment, Underwriter Laboratories (File-No. E219022) for USA and Canada	

Mains data	
Mains types	
With grounded neutral (TT/TN systems)	Operation permitted without restrictions
Other mains types	Observe instructions for special measures in the documentation for the basic device!

Protection of persons and equipment			
Enclosure	EN 60529	IP20	Not in the wire range of the terminals
	NEMA 250	Protection against contact to type 1	
Earth leakage current	IEC/EN 61800-5-1	> 3.5 mA AC > 10 mA DC	Observe regulations and safety instructions!
Insulation resistance	IEC/EN 61800-5-1	< 2000 m site altitude: overvoltage category III	
		> 2000 m site altitude: overvoltage category II	

Environmental conditions		
Climate		
Storage	IEC/EN 60721-3-1	1K3 (-25 ... +60 °C)
Transport	IEC/EN 60721-3-2	2K3 (-25 ... +70 °C)
Operation	IEC/EN 60721-3-3	3K3 (-10 ... +55 °C) Current derating from +45 ... +55 °C: 2.5 %/°C
Site altitude		0 ... 4000 m amsl 1000 ... 4000 m amsl: current derating of 5 %/1000 m
Pollution	EN 61800-5-1	Degree of pollution 2
Vibration resistance (9.81 m/s² = 1 g)		
Transport	IEC/EN 60721-3-2	2M2
	EN 61800-2	2 ... 9 Hz: Amplitude 3.5 mm
		10 ... 200 Hz: acceleration resistant up to 10 m/s²
		200 ... 500 Hz: acceleration resistant up to 15 m/s²
Operation	Germanischer Lloyd	5 ... 13.2 Hz: Amplitude ±1 mm 13.2 ... 100 Hz: acceleration resistant up to 0.7 g
	IEC/EN 60068-2-6	10 ... 57 Hz: Amplitude 0.075 mm
		57 ... 150 Hz: Acceleration resistant up to 1 g

Mounting conditions		
Mounting place		In the control cabinet
Mounting position		Vertically
Free space		The required free space results from the mounting position and the specifications of the standard device.

Rated data

Mains	Voltage U_{Lrated} [V]	Voltage range U_{Lrated} [V]	Frequency range f [Hz]
3/PE AC	230	180 - 0 % ... 264 + 0 %	45 - 0 % ... 65 + 0 %
3/PE AC	400	320 - 0 % ... 440 + 0 %	45 - 0 % ... 65 + 0 %
3/PE AC	480	340 - 0 % ... 528 + 0 %	45 - 0 % ... 65 + 0 %

	Voltage [V]	Freq. [Hz]	Current [A] ① max. +45° C	Current [A] ① max. +55° C	Number of phases
E94AZMP0084	230/400/480	50/60	8/8/8	6/6/6	3
E94AZMP0294	230/400/480	50/60	29/29/29	21.8/21.8/21.8	3

① Temperature in the control cabinet

	Power loss P_{loss} [W]	Inductance L [mH]	Voltage drop ΔU [V]
E94AZMP0084	50	3.9	9.8
E94AZMP0294	110	0.7	6.4

Thermal contact

	Design	max. switching voltage U_{Th} [V AC]	max. switching current I_{Th} [A]
E94AZMP0084	NC contact, 150 °C	250	2.5
E94AZMP0294			

Dimensions

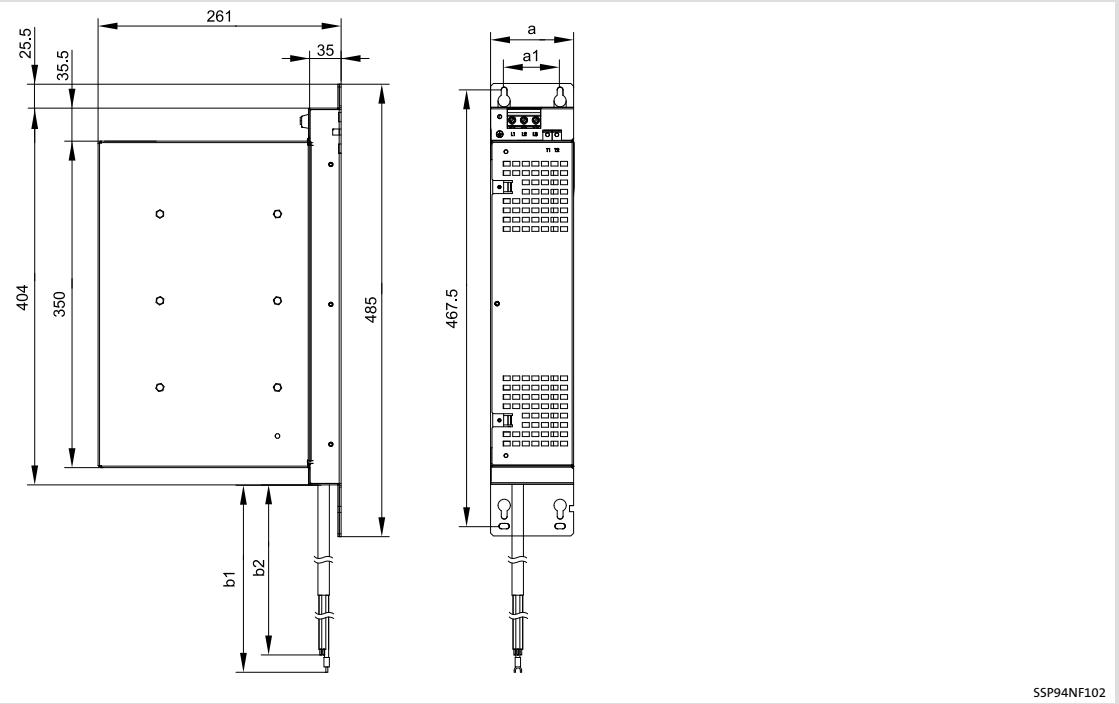

All dimensions in millimetres.

	a	a1	b1	b2	Mass
	[mm]				[kg]
E94AZMP0084	90	60	360 ±5	350 ±5	8.6
E94AZMP0294	120	90	430 ±5	420 ±5	16.0

Mechanical installation

For information on this topic, please see the corresponding mounting instructions.

Electrical installation

Standard mounting

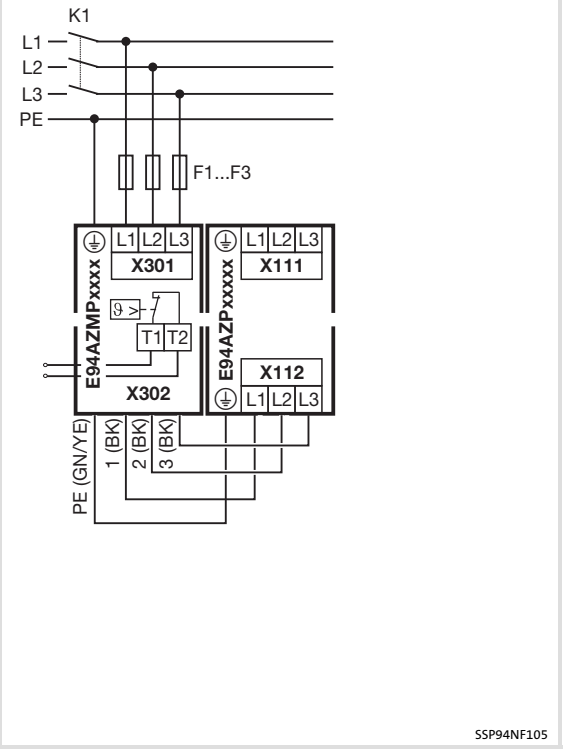

Mounting variant

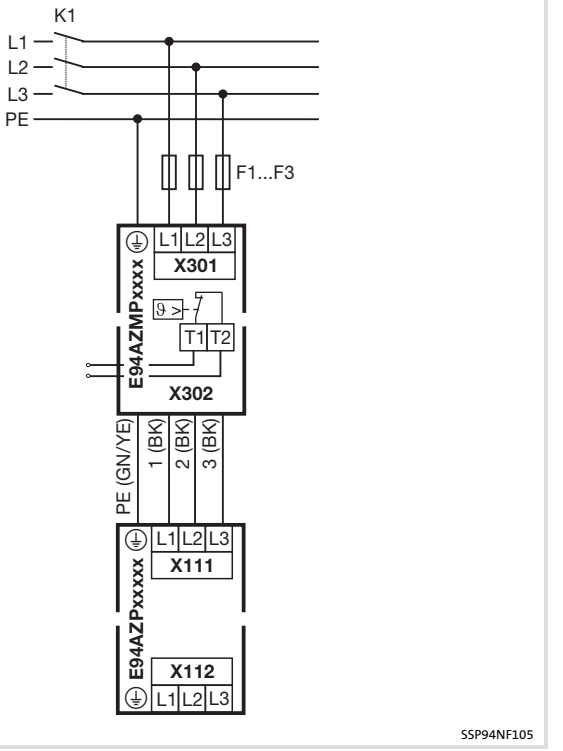

Fig. 8-4 Connection concept

E94AZMPxxxx	Mains filter
E94AZPxxxxx	Installation backplane for 9400 DC power supply module
F1 ... F3	Fuses
K1	Mains contactor

Mains

Terminal X301	Labelling	Description
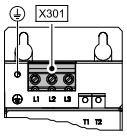 SSP94NF106	L1 L2 L3	Connection of the mains phases L1, L2, L3
	⏚	Connection for the supply-side PE conductor with M5 ring cable lug

Terminal data

	Max. conductor cross-section		Tightening torque		
	[mm²]	[AWG]	[Nm]	[lb-in]	
E94AZxP0084	10	6	1.2 ... 1.5	10.6 ... 13.3	PH1
E94AZxP0294					

PE connection data

	∅	Starting torque		
	[mm]	[Nm]	[lb-in]	
E94AZxP0084	M5	3	26.5	SW 8
E94AZxP0294				

Standard device

Cable X302	Labelling	Description
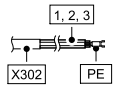 SSP94FF007	1 2 3	Filter output conductor (lead with wire end ferrule, colour BK)
	PE	Output-side PE conductor (lead with M5 fork-type cable lug, colour GN/YE)

Thermal contact

Terminal T1/T2	Labelling	Description
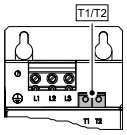 SSP94NF108	T1 T2	Thermal contact connection

Terminal data					
	Max. conductor cross-section		Tightening torque		
	[mm²]	[AWG]	[Nm]	[lb-in]	
E94AZMP0084	4	10	0.6 ... 0.8	5.3 ... 7.1	PZ1
E94AZMP0294					

Safety instructions for the installation according to UL/CSA

Original - English

Warnings!

Conditions of Acceptability:

- The products covered by this report are only intended for use with Power Conversion Equipment (inverters).
- Consideration shall be given to the field wiring leads. No strain relief test was performed on the leads.
- The devices in this report are only evaluated for factory wiring use.
- Temperature tests were performed with hook mounted drive.

Original - French

Avertissement !

Conditions d'acceptabilité :

- Les produits concernés par ce rapport sont destinés exclusivement à être utilisés avec des convertisseurs de puissance (variateurs ou power conversion equipment).
- Une attention particulière doit être apportée aux tresses de câblage à pied d'oeuvre. Aucun test de décharge de traction n'a été réalisé sur ces éléments.
- Les équipements concernés par ce rapport sont évalués exclusivement pour un câblage en usine.
- Les tests de température ont été réalisés avec un entraînement à crochet.

8.10.3 Mains filters for power supply modules E94AZMPxxxx (82 ... 200 A)

Assignment of filters to standard devices

Mains filter		DC power supply module	
Type	Device size	Type	Device size
E94AZMP0824	4	E94APNE1004	4
E94AZMP2004	5	E94APNE2454	5
E94AZMP0824	4	E70ACPSx0604x	2

Elements on the filter

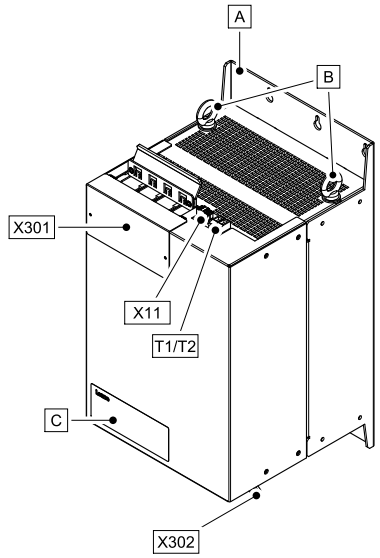

SSP94NF301

Pos.	Description
A	Mains filter E94AZMPxxxx
	Mounting Instructions

Pos.	Description
X301	Mains connection for L1 ... L3 and PE
X302	Connection cables to DC power supply module L1' ... L3' and PE
X11	Voltage supply for internal fan (24 V DC)
T1/T2	Thermal contact terminals T1, T2
B	Ring bolts
C	Nameplate

Identification

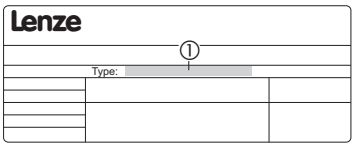

SSP94NF002

	①						
Type code	**E94**	**A**	**Z**	**M**	**P**	**xxx**	**x**
Product range							
Version							
accessories							
Mains filter type							
for 9400 power supply							
Rated current [A]							
Voltage class 4 = 230 ... 400/480 V							

General data

Conformity and approval			
Conformity			
EAC	TP TC 004/2011 (TP ZU 004/2011)	Regarding the safety of low-voltage equipment	Eurasian conformity TR ZU: Technical regulation of the tariff union
EAC	TP TC 020/2011 (TP ZU 020/2011)	Electromagnetic compatibility of technical products	Eurasian conformity TR ZU: Technical regulation of the tariff union
Approval			
$_{C}UR_{US}$	UL508 CSA C22.2 No.14	Industrial Control Equipment, Underwriter Laboratories (File-No. E219022) for USA and Canada	

Mains data	
Mains types	
With grounded neutral (TT/TN systems)	Operation permitted without restrictions
Other mains types	Observe instructions for special measures in the documentation for the basic device!

Protection of persons and equipment			
Enclosure	EN 60529	IP20	Not in the wire range of the terminals
	NEMA 250	Protection against contact to type 1	
Earth leakage current	IEC/EN 61800-5-1	> 3.5 mA AC > 10 mA DC	Observe regulations and safety instructions!
Insulation resistance	IEC/EN 61800-5-1	< 2000 m site altitude: overvoltage category III	
		> 2000 m site altitude: overvoltage category II	

Environmental conditions		
Climate		
Storage	IEC/EN 60721-3-1	1K3 (-25 ... +60 °C)
Transport	IEC/EN 60721-3-2	2K3 (-25 ... +70 °C)
Operation	IEC/EN 60721-3-3	3K3 (-10 ... +55 °C) Current derating from +45 ... +55 °C: 2.5 %/°C
Site altitude		0 ... 4000 m amsl 1000 ... 4000 m amsl: current derating of 5 %/1000 m
Pollution	EN 61800-5-1	Degree of pollution 2
Vibration resistance (9.81 m/s² = 1 g)		
Transport	IEC/EN 60721-3-2	2M2
	EN 61800-2	2 ... 9 Hz: Amplitude 3.5 mm
		10 ... 200 Hz: acceleration resistant up to 10 m/s²
		200 ... 500 Hz: acceleration resistant up to 15 m/s²
Operation	Germanischer Lloyd	5 ... 13.2 Hz: Amplitude ±1 mm 13.2 ... 100 Hz: acceleration resistant up to 0.7 g
	IEC/EN 60068-2-6	10 ... 57 Hz: Amplitude 0.075 mm
		57 ... 150 Hz: Acceleration resistant up to 1 g

Mounting conditions		
Mounting place		In the control cabinet
Mounting position		Vertically
Free space		The required free space results from the mounting position and the specifications of the standard device.

Rated data

Mains	Voltage U_{Lrated} [V]	Voltage range U_{Lrated} [V]	Frequency range f [Hz]
3/PE AC	230	180 - 0 % ... 264 + 0 %	45 - 0 % ... 65 + 0 %
3/PE AC	400	320 - 0 % ... 440 + 0 %	45 - 0 % ... 65 + 0 %
3/PE AC	480	340 - 0 % ... 528 + 0 %	45 - 0 % ... 65 + 0 %

	Voltage [V]	Freq. [Hz]	Current [A] ① max. +45° C	Current [A] ① max. +55° C	Number of phases
E94AZMP0824	230/400/480	50/60	82/82/82	61/61/61	3
E94AZMP2004	230/400/480	50/60	200/200/200	150/150/150	3

① Temperature in the control cabinet

	Power loss P_{loss} [W]	Inductance L [mH]	Voltage drop ΔU [V]
E94AZMP0824	200	0.25	6.4
E94AZMP2004	350	0.10	6.3

Thermal contact

	Design	max. switching voltage U_{Th} [V AC]	max. switching current I_{Th} [A]
E94AZMP0824	NC contact, 150 °C	250	2.5
E94AZMP2004			

Fan

	Voltage [V DC]	Current [A]
E94AZMP0824	24	0.3
E94AZMP2004		

Dimensions

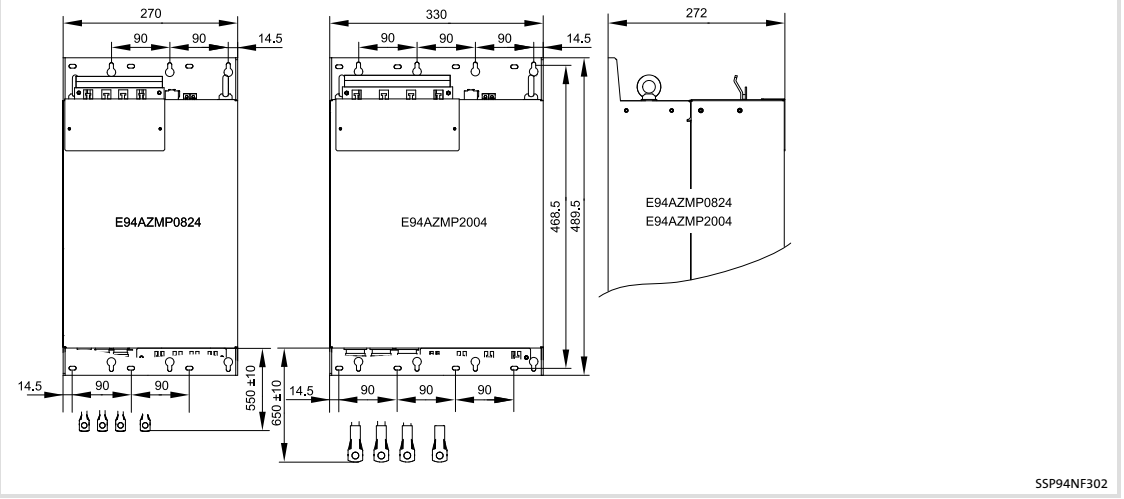

All dimensions in millimetres.

	Mass [kg]
E94AZMP0824	29.0
E94AZMP2004	51.5

Mechanical installation

For information on this topic, please see the corresponding mounting instructions.

Electrical installation

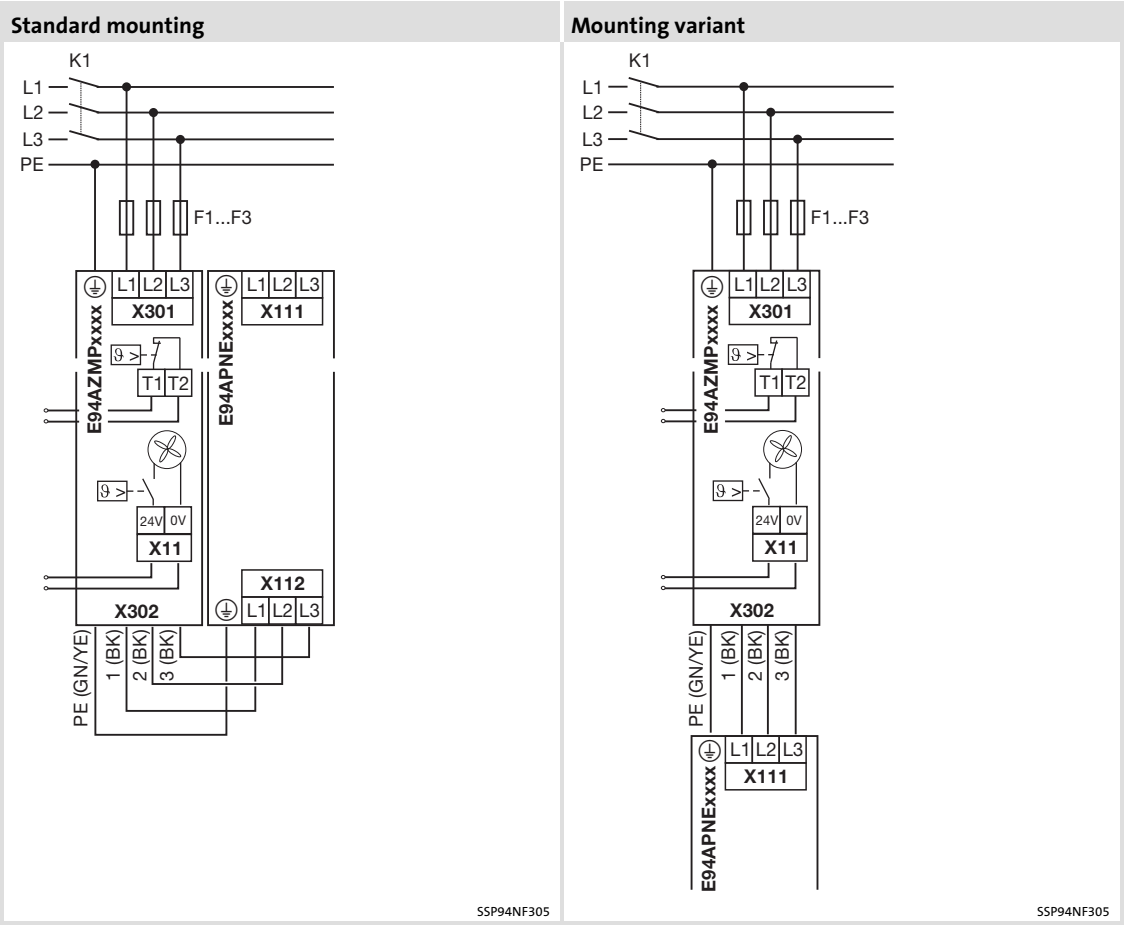

Fig. 8-5 Connection concept

E94AZMPxxxx	Mains filter
E94APNExxxx	9400 DC power supply module
F1 ... F3	Fuses
K1	Mains contactor

Mains

Terminal X301	Labelling	Description
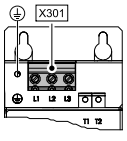 SSP94NF106	L1 L2 L3	Connection of the mains phases L1, L2, L3
	⏚	Connection for the supply-side PE conductor with M5 ring cable lug

Terminal data

	Max. conductor cross-section		Tightening torque		
	[mm²]	[AWG]	[Nm]	[lb-in]	
E94AZxP0824 Connection with M8 ring cable lug	70 (2 x 70)	2/0	12	106	SW13
E94AZxP2004 Connection with M10 ring cable lug	150 (2 x 120)	250 mcm	20	177	SW15

Standard device

Cable X302	Labelling	Description
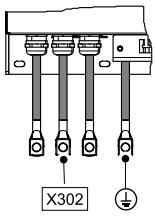 SSP94NF307	L1' L2' L3'	Filter output conductor (lead with ring cable lug, colour BK)
		Output PE conductor (lead with ring cable lug, colour GN/YE)

Thermal contact

Terminal T1/T2	Labelling	Description
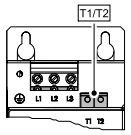 SSP94NF108	T1 T2	Thermal contact connection

Terminal data					
	Max. conductor cross-section		Tightening torque		
	[mm²]	[AWG]	[Nm]	[lb-in]	
E94AZxP0824	4.0	10	0.6 ... 0.8	5.3 ... 7.1	PZ1
E94AZxP2004					

Fan

Terminal X11	Labelling	Description
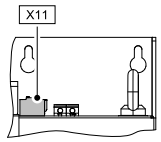 SSP94NF309	GE	GND External supply
	24E	24 V External supply through safely separated power supply unit (SELV/PELV)

Terminal data				
	Conductor cross-section		Tightening torque	
	[mm²]	[AWG]	[Nm]	[lb-in]
E94AZMP0824	0.2 ... 2.5	24 ... 12	-	
E94AZMP2004				

Safety instructions for the installation according to UL/CSA

Original - English

Warnings!

Conditions of Acceptability:

- The products covered by this report are only intended for use with Power Conversion Equipment (inverters).
- Consideration shall be given to the field wiring leads. No strain relief test was performed on the leads.
- The devices in this report are only evaluated for factory wiring use.
- Temperature tests were performed with hook mounted drive.

Original - French

Avertissement !

Conditions d'acceptabilité :

- Les produits concernés par ce rapport sont destinés exclusivement à être utilisés avec des convertisseurs de puissance (variateurs ou power conversion equipment).
- Une attention particulière doit être apportée aux tresses de câblage à pied d'oeuvre. Aucun test de décharge de traction n'a été réalisé sur ces éléments.
- Les équipements concernés par ce rapport sont évalués exclusivement pour un câblage en usine.
- Les tests de température ont été réalisés avec un entraînement à crochet.

8.10.4 Mains filters for regenerative power supply modules E94AZMRxxxx (26 ... 47 A)

Assignment of filters to standard devices

Mains filter	Regenerative power supply module		Device size
	Standard device	Installation backplane	
E94AZMR0264SDB E94AZMR0264LDB	E94ARNE0134	E94AZPP0364	GG3
E94AZMR0474SDB E94AZMR0474LDB	E94ARNE0244		

Elements on the filter

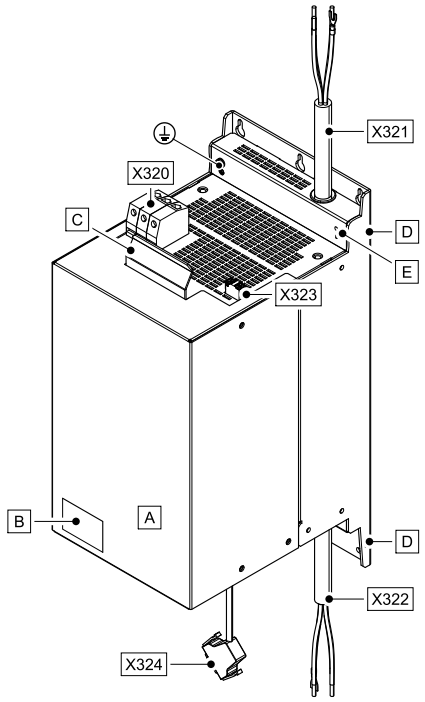

Pos.	Description
A	Mains filter
	Mounting Instructions

Pos.	Description
B	Nameplate
C	Lifting aid
D	Mounting aid for mounting base
E	Parking position of the IT screw
⏚	PE terminal
X320	Terminal L1 ... L3
X321	Connecting cable L1.1 ... L3.1
X322	Connecting cable L1.2 ... L3.2
X323	Terminal for 24-V supply voltage (use safely separated power supply unit (SELV/PELV), in accordance with IEC 61131-2)
X324	Mains filter control signal

Identification

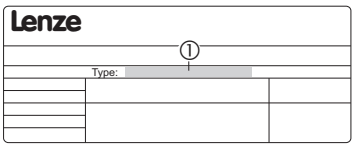

SSP94NF002

Type code	①							
	E94	A	Z	MR	xxx	4	xx	B

Product range

Version

accessories

Type mains filter for regenerative power supply module

Rated current [A]

Voltage class
4 = 230 ... 400/480 V

Version
SD = short-distance motor cables
LD = long-distance motor cables

Operating mode
B = block mode

General data

Conformity and approval			
Conformity			
EAC	TP TC 004/2011 (TP ZU 004/2011)	Regarding the safety of low-voltage equipment	Eurasian conformity TR ZU: Technical regulation of the tariff union
EAC	TP TC 020/2011 (TP ZU 020/2011)	Electromagnetic compatibility of technical products	Eurasian conformity TR ZU: Technical regulation of the tariff union
Approval			
$_{C}UR_{US}$	UL508 CSA C22.2 No.14	Industrial Control Equipment, Underwriter Laboratories (File-No. E219022) for USA and Canada	

Mains data	
Mains types	
With grounded neutral (TT/TN systems)	Operation permitted without restrictions
IT systems	Request specific measures from Lenze

Protection of persons and equipment			
Enclosure	EN 60529	IP20	Not in the wire range of the terminals
	NEMA 250	Protection against contact to type 1	
Earth leakage current	IEC/EN 61800-5-1	> 3.5 mA AC > 10 mA DC	Observe regulations and safety instructions!
Insulation resistance	IEC/EN 61800-5-1	< 2000 m site altitude: overvoltage category III	
		> 2000 m site altitude: overvoltage category II	

Environmental conditions		
Climate		
Storage	IEC/EN 60721-3-1	1K3 (-25 ... +60 °C)
Transport	IEC/EN 60721-3-2	2K3 (-25 ... +70 °C)
Operation	IEC/EN 60721-3-3	3K3 (-10 ... +55 °C) Current derating from +45 ... +55 °C: 2.5 %/°C
Site altitude		0 ... 4000 m amsl 1000 ... 4000 m amsl: current derating of 5 %/1000 m
Pollution	EN 61800-5-1	Degree of pollution 2
Vibration resistance (9.81 m/s² = 1 g)		
Transport	IEC/EN 60721-3-2	2M2
	EN 61800-2	2 ... 9 Hz: Amplitude 3.5 mm
		10 ... 200 Hz: acceleration resistant up to 10 m/s²
		200 ... 500 Hz: acceleration resistant up to 15 m/s²
Operation	Germanischer Lloyd	5 ... 13.2 Hz: Amplitude ±1 mm 13.2 ... 100 Hz: acceleration resistant up to 0.7 g
	IEC/EN 60068-2-6	10 ... 57 Hz: Amplitude 0.075 mm
		57 ... 150 Hz: Acceleration resistant up to 1 g

Mounting conditions		
Mounting place		In the control cabinet
Mounting position		Vertically
Free space		The required free space results from the mounting position and the specifications of the standard device.

Rated data

Mains	Voltage U_{Lrated} [V]	Voltage range U_{Lrated} [V]	Frequency range f [Hz]
3/PE AC	230	180 - 0 % ... 264 + 0 %	45 - 0 % ... 65 + 0 %
3/PE AC	400	320 - 0 % ... 440 + 0 %	45 - 0 % ... 65 + 0 %
3/PE AC	480	340 - 0 % ... 528 + 0 %	45 - 0 % ... 65 + 0 %

	Voltage [V]	Freq. [Hz]	Current [A] ① max. +45° C	Current [A] ① max. +55° C	Number of phases
E94AZMR0264xDB	230/400/480	50/60	26/26/26	19/19/19	3
E94AZMR0474xDB	230/400/480	50/60	47/47/47	35/35/35	3

① Temperature in the control cabinet

	Power loss	Inductance	Regenerative inductance	Voltage drop
	P_V [W]	L [mH]	L_{gen} [mH]	ΔU [V]
E94AZMR0264SDB	65	0.77 ±10 %	0.84 ±10 %	6.3
E94AZMR0264LDB	72			
E94AZMR0474SDB	85	0.42 ±10 %	1.54 ±10 %	6.2
E94AZMR0474LDB	101			

Dimensions

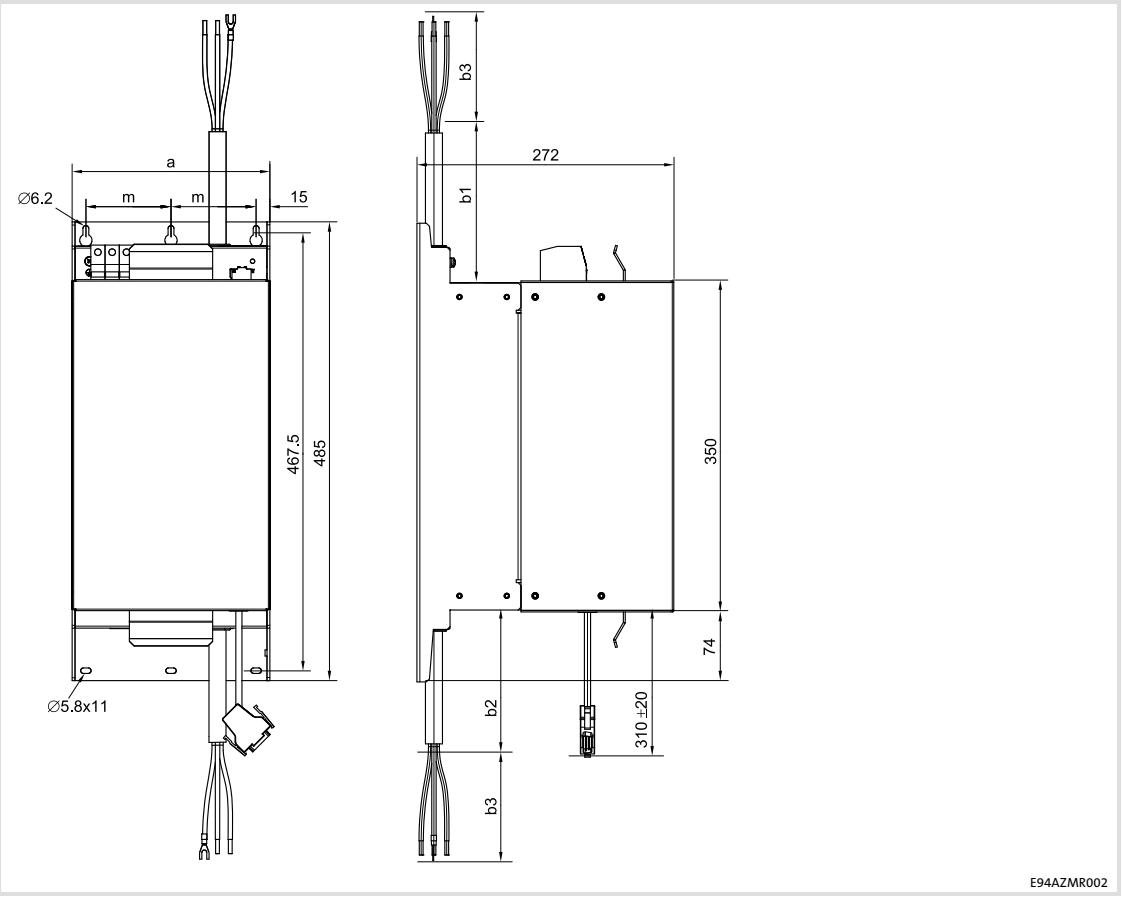

All dimensions in millimetres.

	a	m	b1	b2	b3	
	[mm]					[kg]
E94AZRM0264SDB	149	60	240 ±5	260 ±5	100 ±5	25
E94AZRM0264LDB						26
E94AZRM0474SDB	209	90	250 ±5	270 ±5	110 ±5	36
E94AZRM0474LDB						37

Mechanical installation

For information on this topic, please see the corresponding mounting instructions.

Electrical installation

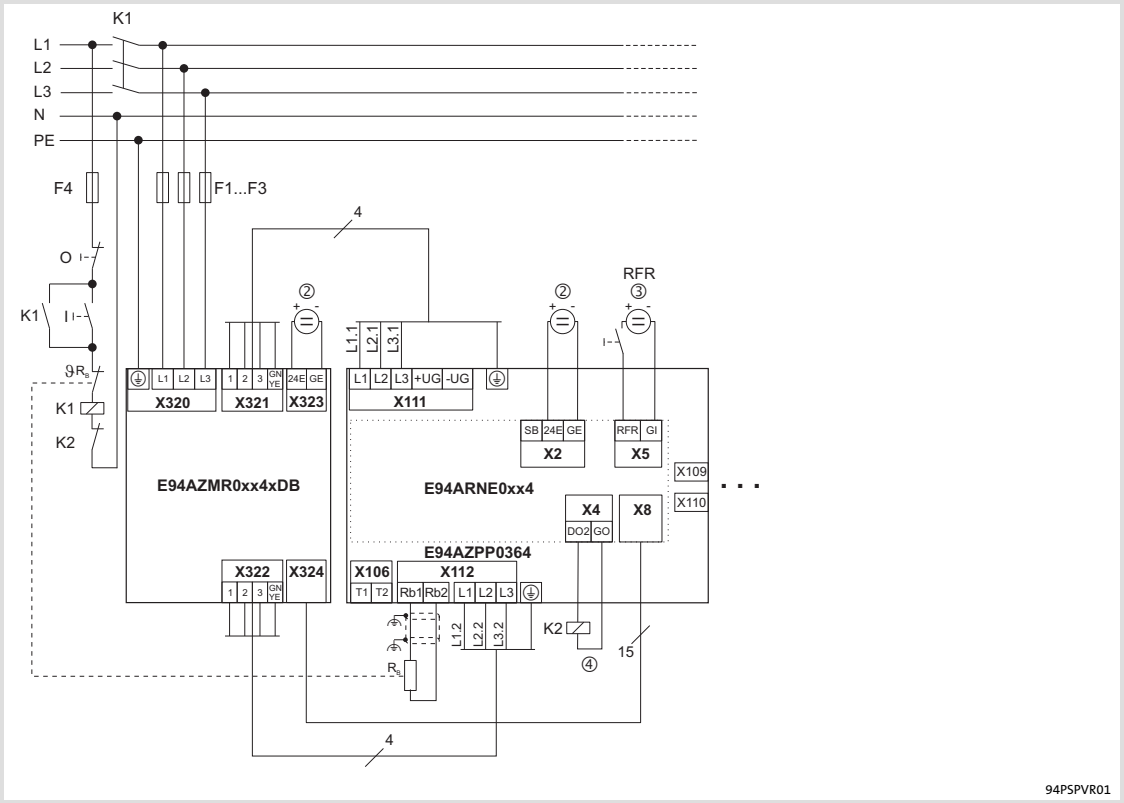

E94ARNE0xx4	Regenerative power supply module
E94AZPP0364	Installation backplane for the regenerative power supply module
E94AZMR0...	Mains filter
F1 ... F4	Fuses
RFR	Controller enable (only for regenerative feedback)
K1	Mains contactor
RB	Brake resistor (Mounting instructions brake resistor)
②	24 V voltage source for the control electronics (safely separated power supply unit (SELV/PELV) according to IEC 61131-2)
③	24 V voltage source for the digital inputs according to IEC 61131-2
④	From FW 02.00: Overtemperature disconnection DO2 load: max. 50 mA

Mains

Terminal X320	Labelling	Description
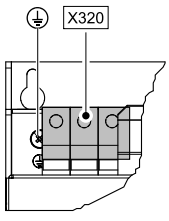 SSP94NF406	L1 L2 L3	Connection of the L1, L2, L3 mains phases
	⏚	Connection for the supply-side PE conductor with M5 ring cable lug

Terminal data					
	Max. conductor cross-section		Tightening torque		
	[mm²]	[AWG]	[Nm]	[lb-in]	
E94AZMR0264xDB	10	6	1.2 ... 1.5	10.6 ... 13.3	1.0 x 4.0
E94AZMR0474xDB	25	2	2.5	22.1	1.0 x 6.5

PE connection data				
	∅	Starting torque		
	[mm]	[Nm]	[lb-in]	
E94AZMR0264xDB	M5	3	26.5	PH2
E94AZMR0474xDB				

24 V supply

Terminal X323	Labelling	Description
 SSP9400X11	GE	GND external supply
	24E	24 V external supply through safely separated power supply unit (SELV/PELV) IEC 61131-2, 22.8 ... 28.8 V, residual ripple max. ±5 % Current during operation: 450 mA Starting current: max. 4 A for 100 ms

Terminal data				
	Conductor cross-section		Tightening torque	
	[mm²]	[AWG]	[Nm]	[lb-in]
Flexible	0.2 ... 2.5	24 ... 12	Spring terminal	
With wire end ferrule				

Stripping length / contact length: 10 mm

Safety instructions for the installation according to UL/CSA

Original - English

Warnings!

Conditions of Acceptability:

- ► The products are only intended to be used for Lenze Drives E94ARNE0134 and E94ARNE0244.
  - – All test results are only valid for this Lenze Drives.
- ► The devices are only evaluated for factory wiring use.

Original - French

Avertissement !

Conditions d'acceptabilité :

- ► Ces produits sont destinés exclusivement à être utilisés avec les systèmes d'entraînement Lenze E94ARNE0134 et E94ARNE0244.
  - – Tous les résultats des tests sont valables uniquement pour ces systèmes d'entraînement Lenze.
- ► Ces équipements sont évalués exclusivement pour un câblage en usine.

8.10.5 RFI filters for single-axis controllers E94AZRSxxxx (4 ... 29 A)

Assignment of filters to standard devices

RFI filter type	Single-axis controller type	Device size
E94AZRS0044	E94xSxE002x	1
	E94xSxE003x	
E94AZRS0104	E94xSxE004x	2
	E94xSxE007x	
E94AZRS0294	E94xSxE013x	3
	E94xSxE017x	
	E94xSxE024x	

Elements on the filter

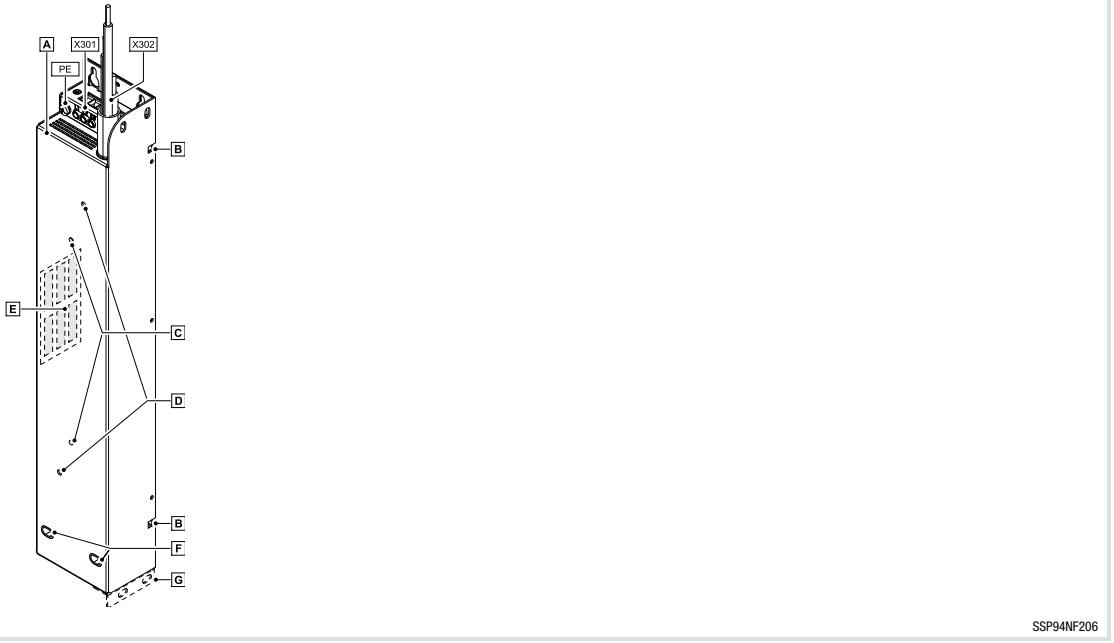

Pos.	Description
A	RFI filter E94AZRSxxxx
	Mounting Instructions

Pos.	Description
PE	PE connection (for M5 ring or fork-type cable lug)
X301	Mains terminal L1 ... L3
X302	Connection cable to controller, 4-core
B	Mounting aid for mounting base
C	Guide pins for mounting base
D	Mounting thread for mounting base
E	Nameplate
F	Fastening at the bottom
G	Angle bracket for ”side-by-side” mounting variant, device sizes 2 and 3

Identification

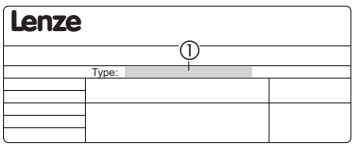

SSP94NF002

	①						
Type code	**E94**	**A**	**Z**	**R**	**S**	**xxx**	**x**
Product range							
Version							
accessories							
RFI filter type							
for 9400 Single Drive							
Rated current [A]							
Voltage class 4 = 230 ... 400/480 V							

General data

Conformity and approval			
Conformity			
EAC	TP TC 004/2011 (TP ZU 004/2011)	Regarding the safety of low-voltage equipment	Eurasian conformity TR ZU: Technical regulation of the tariff union
EAC	TP TC 020/2011 (TP ZU 020/2011)	Electromagnetic compatibility of technical products	Eurasian conformity TR ZU: Technical regulation of the tariff union
Approval			
$_{C}UR_{US}$	UL508 CSA C22.2 No.14	Industrial Control Equipment, Underwriter Laboratories (File-No. E219022) for USA and Canada	

Mains data	
Mains types	
With grounded neutral (TT/TN systems)	Operation permitted without restrictions
Other mains types	Observe instructions for special measures in the documentation for the basic device!

Protection of persons and equipment			
Enclosure	EN 60529	IP20	Not in the wire range of the terminals
	NEMA 250	Protection against contact to type 1	
Earth leakage current	IEC/EN 61800-5-1	> 3.5 mA AC > 10 mA DC	Observe regulations and safety instructions!
Insulation resistance	IEC/EN 61800-5-1	< 2000 m site altitude: overvoltage category III	
		> 2000 m site altitude: overvoltage category II	

Environmental conditions		
Climate		
Storage	IEC/EN 60721-3-1	1K3 (-25 ... +60 °C)
Transport	IEC/EN 60721-3-2	2K3 (-25 ... +70 °C)
Operation	IEC/EN 60721-3-3	3K3 (-10 ... +55 °C) Current derating from +45 ... +55 °C: 2.5 %/°C
Site altitude		0 ... 4000 m amsl 1000 ... 4000 m amsl: current derating of 5 %/1000 m
Pollution	EN 61800-5-1	Degree of pollution 2
Vibration resistance (9.81 m/s² = 1 g)		
Transport	IEC/EN 60721-3-2	2M2
	EN 61800-2	2 ... 9 Hz: Amplitude 3.5 mm
		10 ... 200 Hz: acceleration resistant up to 10 m/s²
		200 ... 500 Hz: acceleration resistant up to 15 m/s²
Operation	Germanischer Lloyd	5 ... 13.2 Hz: Amplitude ±1 mm 13.2 ... 100 Hz: acceleration resistant up to 0.7 g
	IEC/EN 60068-2-6	10 ... 57 Hz: Amplitude 0.075 mm
		57 ... 150 Hz: Acceleration resistant up to 1 g

Mounting conditions		
Mounting place		In the control cabinet
Mounting position		Vertically
Free space		The required free space results from the mounting position and the specifications of the standard device.

Rated data

Mains	Voltage U_{Lrated} [V]	Voltage range U_{Lrated} [V]	Frequency range f [Hz]
3/PE AC	230	180 - 0 % ... 264 + 0 %	45 - 0 % ... 65 + 0 %
3/PE AC	400	320 - 0 % ... 440 + 0 %	45 - 0 % ... 65 + 0 %
3/PE AC	480	340 - 0 % ... 528 + 0 %	45 - 0 % ... 65 + 0 %

	Voltage	Frequency	Rated current [A]		Number of phases
	[V]	[Hz]	up to +45 °C ①	up to +55 °C ①	
E94AZRS0044	230/400/480	50/60	3.5/3.5/3.5	2.2/2.2/2.2	3
E94AZRS0104	230/400/480	50/60	10/10/10	6.2/6.2/6.2	3
E94AZRS0294	230/400/480	50/60	29/29/29	18/18/18	3

① Temperature in the control cabinet

	Power loss P_{loss} [W]	Inductance L [mH]	Voltage drop ΔU [V]
E94AZRS0044	4	-	-
E94AZRS0104	8	-	-
E94AZRS0294	22	-	-

Dimensions

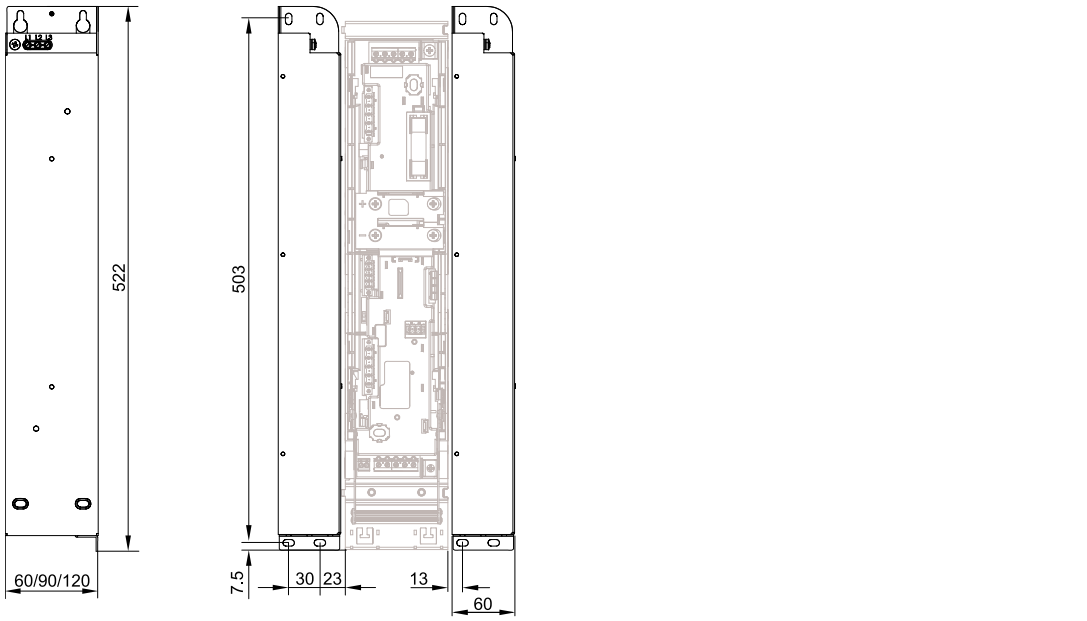

All dimensions in millimetres.

	Mass [kg]
E94AZRS0044	1.8
E94AZRS0104	2.3
E94AZRS0294	3.6

Mechanical installation

For information on this topic, please see the corresponding mounting instructions.

Electrical installation

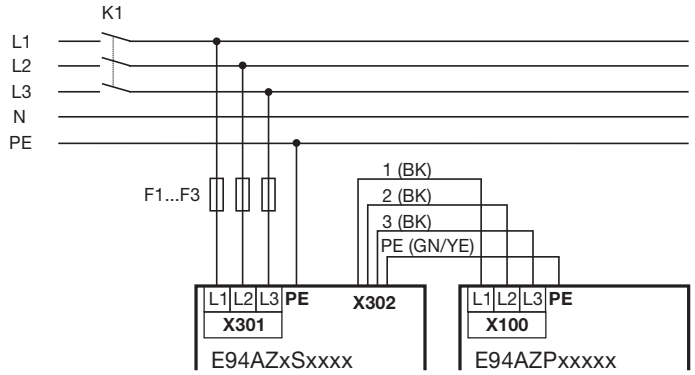

Mains

Terminal X301	Labelling	Description
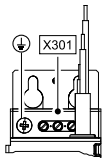 SSP94FF008	L1 L2 L3	Connection of the mains phases L1, L2, L3
	⏚	Connection for the supply-side PE conductor with M5 ring cable lug

Terminal data

	Max. conductor cross-section		Tightening torque		
	[mm²]	[AWG]	[Nm]	[lb-in]	
E94AZRS0044	2.5	14	0.5 ... 0.6	4.4 ... 5.3	PH1
E94AZRS0104	4	12			
E94AZRS0294	10	8	1.2 ... 1.5	10.6 ... 13.3	

PE connection data

	∅	Starting torque		
	[mm]	[Nm]	[lb-in]	
E94AZRS0044	M5	3.0	26.5	SW 8
E94AZRS0104				
E94AZRS0294				

Standard device

Cable X302	Labelling	Description
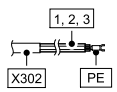 SSP94FF007	1 2 3	Filter output conductor (lead with wire end ferrule, colour BK)
	PE	Output-side PE conductor (lead with M5 fork-type cable lug, colour GN/YE)

Safety instructions for the installation according to UL/CSA

Original - English

Warnings!

Conditions of Acceptability:

- The products covered by this report are only intended for use with Power Conversion Equipment (inverters).
- Consideration shall be given to the field wiring leads. No strain relief test was performed on the leads.
- The devices in this report are only evaluated for factory wiring use.
- Temperature tests were performed with hook mounted drive.

Original - French

Avertissement !

Conditions d'acceptabilité :

- Les produits concernés par ce rapport sont destinés exclusivement à être utilisés avec des convertisseurs de puissance (variateurs ou power conversion equipment).
- Une attention particulière doit être apportée aux tresses de câblage à pied d'oeuvre. Aucun test de décharge de traction n'a été réalisé sur ces éléments.
- Les équipements concernés par ce rapport sont évalués exclusivement pour un câblage en usine.
- Les tests de température ont été réalisés avec un entraînement à crochet.

8.10.6 RFI filters for single-axis controllers E94AZRSxxxx (54 ... 95 A)

Assignment of filters to standard devices

RFI filter		Single-axis controller	
Type	Device size	Type	Device size
E94AZRS0544	6	E94xSxE032x	6
		E94xSxE047x	
		E94xSxE059x	
E94AZRS0954	7	E94xSxE086x	7
		E94xSxE104x	

Elements on the filter

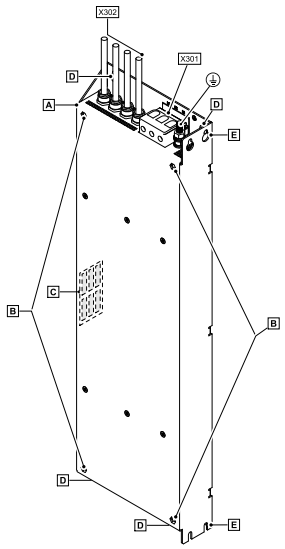

SSP94FF601

Pos.	Description
A	RFI filter E94AZRSxxxx
	Mounting Instructions

Pos.	Description
⏚	PE connection (for ring or fork-type cable lug M8)
X301	Mains terminal L1 ... L3
X302	Connection cable to controller, four-core
B	Fastening thread for standard device
C	Nameplate
D	Fixings for standard mounting (footprint mounting)
E	Fixings for mounting variant (side-by-side mounting)

Identification

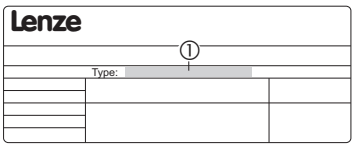

SSP94NF002

	①						
Type code	**E94**	**A**	**Z**	**R**	**S**	**xxx**	**x**

Product range
Version
accessories
RFI filter type
for 9400 Single Drive
Rated current [A]
Voltage class
4 = 230 ... 400/480 V

General data

Conformity and approval			
Conformity			
EAC	TP TC 004/2011 (TP ZU 004/2011)	Regarding the safety of low-voltage equipment	Eurasian conformity TR ZU: Technical regulation of the tariff union
EAC	TP TC 020/2011 (TP ZU 020/2011)	Electromagnetic compatibility of technical products	Eurasian conformity TR ZU: Technical regulation of the tariff union
Approval			
$_{C}UR_{US}$	UL508 CSA C22.2 No.14	Industrial Control Equipment, Underwriter Laboratories (File-No. E219022) for USA and Canada	

Mains data	
Mains types	
With grounded neutral (TT/TN systems)	Operation permitted without restrictions
Other mains types	Observe instructions for special measures in the documentation for the basic device!

Protection of persons and equipment			
Enclosure	EN 60529	IP20	Not in the wire range of the terminals
	NEMA 250	Protection against contact to type 1	
Earth leakage current	IEC/EN 61800-5-1	> 3.5 mA AC > 10 mA DC	Observe regulations and safety instructions!
Insulation resistance	IEC/EN 61800-5-1	< 2000 m site altitude: overvoltage category III	
		> 2000 m site altitude: overvoltage category II	

Environmental conditions		
Climate		
Storage	IEC/EN 60721-3-1	1K3 (-25 ... +60 °C)
Transport	IEC/EN 60721-3-2	2K3 (-25 ... +70 °C)
Operation	IEC/EN 60721-3-3	3K3 (-10 ... +55 °C) Current derating from +45 ... +55 °C: 2.5 %/°C
Site altitude		0 ... 4000 m amsl 1000 ... 4000 m amsl: current derating of 5 %/1000 m
Pollution	EN 61800-5-1	Degree of pollution 2
Vibration resistance (9.81 m/s² = 1 g)		
Transport	IEC/EN 60721-3-2	2M2
	EN 61800-2	2 ... 9 Hz: Amplitude 3.5 mm
		10 ... 200 Hz: acceleration resistant up to 10 m/s²
		200 ... 500 Hz: acceleration resistant up to 15 m/s²
Operation	Germanischer Lloyd	5 ... 13.2 Hz: Amplitude ±1 mm 13.2 ... 100 Hz: acceleration resistant up to 0.7 g
	IEC/EN 60068-2-6	10 ... 57 Hz: Amplitude 0.075 mm
		57 ... 150 Hz: Acceleration resistant up to 1 g

Mounting conditions		
Mounting place		In the control cabinet
Mounting position		Vertically
Free space		The required free space results from the mounting position and the specifications of the standard device.

Rated data

Mains	Voltage U_{Lrated} [V]	Voltage range U_{Lrated} [V]	Frequency range f [Hz]
3/PE AC	230	180 - 0 % ... 264 + 0 %	45 - 0 % ... 65 + 0 %
3/PE AC	400	320 - 0 % ... 440 + 0 %	45 - 0 % ... 65 + 0 %
3/PE AC	480	340 - 0 % ... 528 + 0 %	45 - 0 % ... 65 + 0 %

	Voltage	Frequency	Rated current [A]		Number of phases
	[V]	[Hz]	up to +45 °C ①	up to +55 °C ①	
E94AZRS0544	230/400/480	50/60	54.0/54.0/54.0	40.5/40.5/40.5	3
E94AZRS0954	230/400/480	50/60	95.0/95.0/95.0	71.0/71.0/71.0	3

① Temperature in the control cabinet

	Power loss P_{loss} [W]	Inductance L [mH]	Voltage drop ΔU [V]
E94AZRS0544	50	–	–
E94AZRS0954	70	–	–

Dimensions

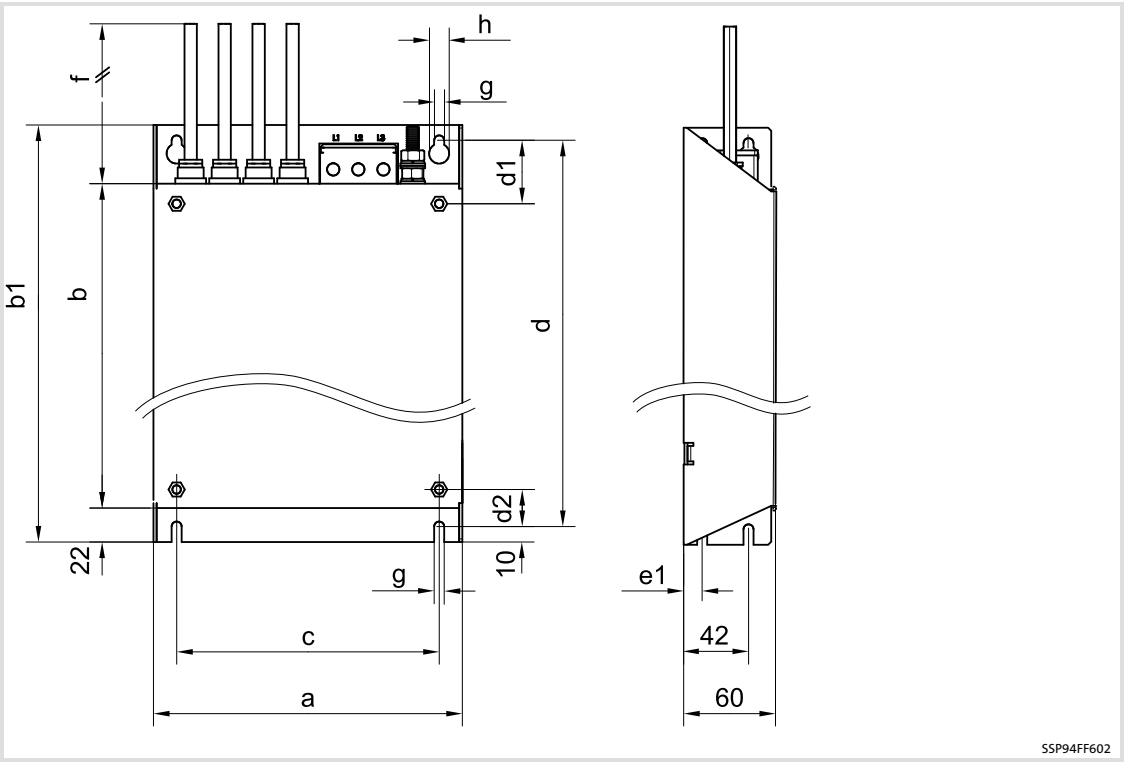

All dimensions in millimetres.

E94AZxS	a	b	b1	c	d	d1	d2	e1	f	g	h	Mass
	[mm]											[kg]
...0544	201	610	670	170	650	41	24	12	500 ±10	6.5	13.0	9
...0954	261	713	790	230	760	48	27	17	550 ±10	9.0	16.5	13

E94AZxS	a	b	b1	c	d	d1	d2	e1	f	g	h	Mass
	[mm]											[kg]
...0544	201	610	670	170	650	41	24	12	500 ±10	6.5	13.0	9
...0954	261	713	790	230	760	48	27	17	550 ±10	9.0	16.5	13

	Mass
	[kg]
E94AZRS0044	1.8
E94AZRS0104	2.3
E94AZRS0294	3.6

Mechanical installation

Note!

The filter can be mounted in two ways. From this result different mounting dimensions.

- ► Standard mounting: The filter is mounted underneath the standard device.
- ► Side-by-side mounting: In case of a low depth of the control cabinet, the filter is rotated by 90° and mounted to the left side of the standard device.

For information on this topic, please see the corresponding mounting instructions.

Electrical installation

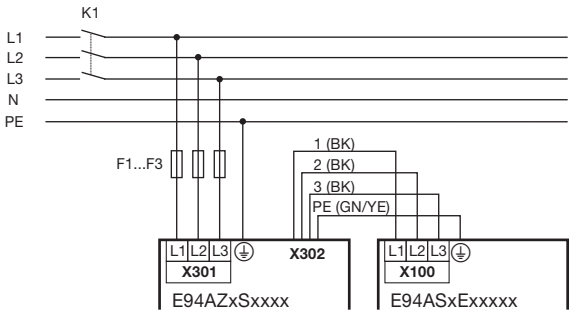

Mains

Terminal X301	Labelling	Description
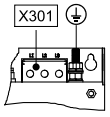 SSP94FF606	L1 L2 L3	Connection of the mains phases L1, L2, L3
	⏚	Connection for the supply-side PE conductor with ring cable lug M8

Terminal data					
	Max. conductor cross-section		Tightening torque		
	[mm²]	[AWG]	[Nm]	[lb-in]	
E94AZxS0544	50	0	10	88.5	Hexagon socket 5
E94AZxS0954	95	000	14	124.0	

PE connection data				
	∅	Starting torque		
	[mm]	[Nm]	[lb-in]	
E94AZxS0544	M8	12	106	SW 13
E94AZxS0954				

Standard device

Cable X302	Labelling	Description
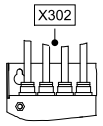 SSP94FF607	1 2 3	Filter output conductor (lead with wire end ferrules, colour BK)
	PE	Output-side PE conductor (lead with wire end ferrule, colour GN/YE)

Safety instructions for the installation according to UL/CSA

Original - English

Warnings!

Conditions of Acceptability:

- The products covered by this report are only intended for use with Power Conversion Equipment (inverters).
- Consideration shall be given to the field wiring leads. No strain relief test was performed on the leads.
- The devices in this report are only evaluated for factory wiring use.
- Temperature tests were performed with hook mounted drive.
- Reactor model E94AZR0544 shall be installed with input wiring of 4 AWG minimum. Reactor model E94AZR0954 shall be installed with input wiring of 1/0 AWG minimum.

Original - French

Avertissement !

Conditions d'acceptabilité :

- Les produits concernés par ce rapport sont destinés exclusivement à être utilisés avec des convertisseurs de puissance (variateurs ou power conversion equipment).
- Une attention particulière doit être apportée au câblage à pied d'oeuvre. Aucun test de décharge de traction n'a été réalisé sur le câblage.
- Les équipements concernés par ce rapport sont évalués exclusivement pour un câblage en usine.
- Les tests de température ont été réalisés avec un entraînement à crochet.
- Il convient de prévoir un câblage d'entrée de 4 AWG minimum pour le modèle E94AZR0544 et de 1/0 AWG minimum pour le modèle E94AZR0954.

8.10.7 RFI filters for single-axis controllers E94AZRSxxxx (3F480-xxx.290EM) 180 ... 415 A

Assignment of filters to standard devices

RFI filter		Single-axis controller	
Type (Lenze)	Type (see nameplate)	Type	Device size
E94AZRS1804	3F480-180.290EM	E94BSHE1454	81
E94AZRS1804	3F480-180.290EM	E94BSHE1724	82
E94AZRS3004	3F480-300.290EM	E94BSHE2024	82
E94AZRS3004	3F480-300.290EM	E94BSHE2454	82
E94AZRS3004	3F480-300.290EM	E94BSHE2924	83
E94AZRS4154	3F480-415.290EM	E94BSHE3664	91
E94AZRS4154	3F480-415.290EM	E94BSHE4604	91

Elements on the filter

E94AZRS1804

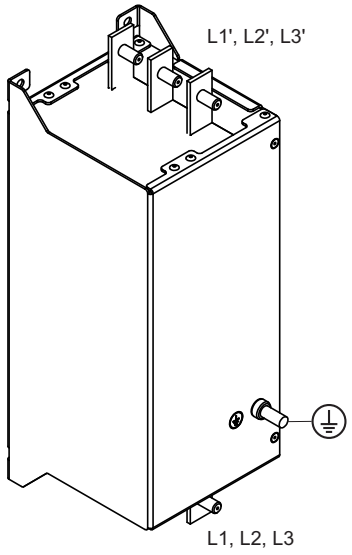

E94AZRS3004, E94AZRS4154

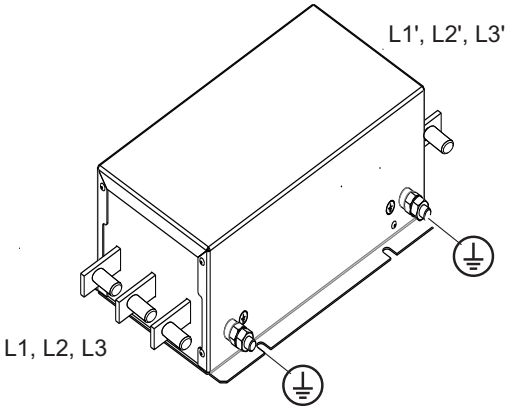

Pos.	Description
⏚	PE conductor connection
L1, L2, L3	Mains terminals
L1', L2', L3'	Device terminals

General data

Mains data	
Mains types	
With grounded neutral (TT/TN systems)	Operation permitted without restrictions
Other mains types	Observe instructions for special measures in the documentation for the basic device!

Protection of persons and equipment			
Enclosure	EN 60529	IP20	Not in the wire range of the terminals
	NEMA 250	Protection against contact to type 1	
Earth leakage current	IEC/EN 61800-5-1	> 3.5 mA AC > 10 mA DC	Observe regulations and safety instructions!
Insulation resistance	IEC/EN 61800-5-1	< 2000 m site altitude: overvoltage category III	
		> 2000 m site altitude: overvoltage category II	

Environmental conditions		
Climate		
Storage	IEC/EN 60721-3-1	1K3 (-25 ... +60 °C)
Transport	IEC/EN 60721-3-2	2K3 (-25 ... +70 °C)
Operation	IEC/EN 60721-3-3	3K3 (-10 ... +55 °C) Current derating from +45 ... +55 °C: 1 %/°C
Site altitude		0 ... 4000 m amsl 1000 ... 4000 m amsl: current derating of 5 %/1000 m
Pollution	EN 61800-5-1	Degree of pollution 2
Vibration resistance (9.81 m/s^2 = 1 g)		
Transport	IEC/EN 60721-3-2	2M2
	EN 61800-2	2 ... 9 Hz: Amplitude 3.5 mm
		10 ... 200 Hz: acceleration resistant up to 10 m/s^2
		200 ... 500 Hz: acceleration resistant up to 15 m/s^2
Operation	Germanischer Lloyd	5 ... 13.2 Hz: Amplitude ±1 mm 13.2 ... 100 Hz: acceleration resistant up to 0.7 g
	IEC/EN 60068-2-6	10 ... 57 Hz: Amplitude 0.075 mm
		57 ... 150 Hz: Acceleration resistant up to 1 g

Mounting conditions		
Mounting place		Mount the filters in the control cabinet close to the standard device on the same mounting plate with a good electrical connection.
Mounting position		Vertically
Free space		The filters can be directly side-mounted. In case of heat sources that exceed the maximum ambient temperature of the filter, a minimum distance of 20 mm must be observed.

Rated data

Mains	Voltage U_{Lrated} [V]	Voltage range U_{Lrated} [V]	Frequency range f [Hz]
3/PE AC	400	320 - 0 % ... 440 + 0 %	45 - 0 % ... 65 + 0 %
3/PE AC	480	340 - 0 % ... 528 + 0 %	45 - 0 % ... 65 + 0 %

	Voltage [V]	Freq. [Hz]	Current [A] ① max. +45° C	Current [A] ① max. +55° C	Number of phases
E94AZRS1804	400/480	50/60	180/180	162/162	3
E94AZRS3004	400/480	50/60	300/300	270/270	3
E94AZRS4154	400/480	50/60	415/415	374/374	3

① Temperature in the control cabinet

	Power loss P_{loss} [W]	Inductance L [mH]	Voltage drop ΔU [V]
E94AZRS1804	14.2	-	-
E94AZRS3004	21.5	-	-
E94AZRS4154	27.0	-	-

Dimensions

E94AZRS1804:

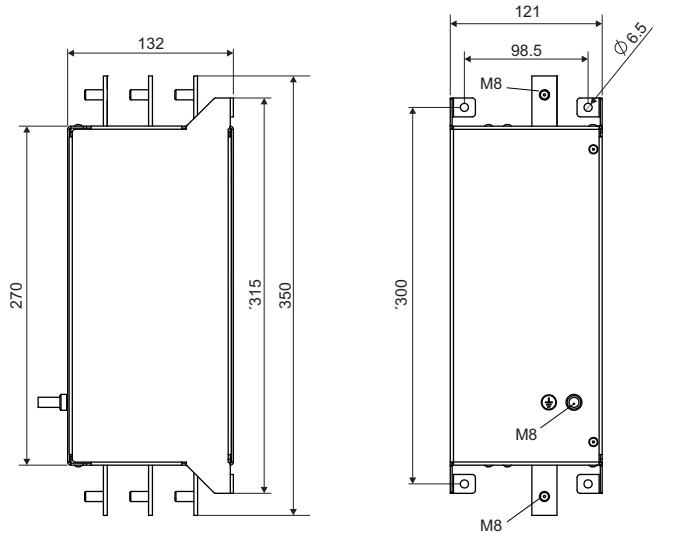

All dimensions in millimetres.

	Mass [kg]
E94AZRS1804	7.9

E94AZRS3004, E94AZRS4154:

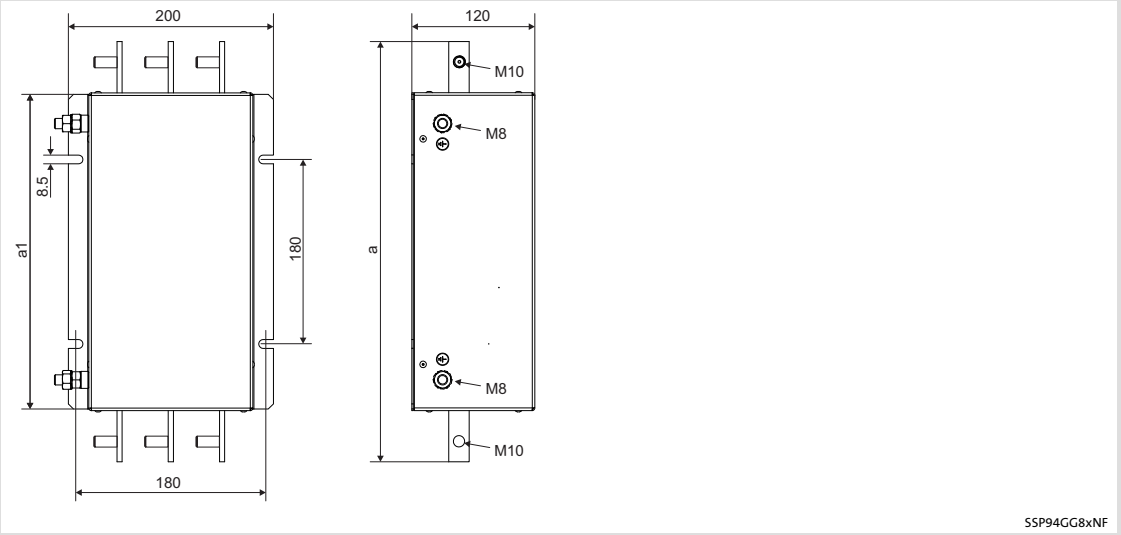

All dimensions in millimetres.

	a	a1	Mass
	[mm]	mm]	[kg]
E94AZRS3004	410	310	12
E94AZRS4154	450	350	13.5

Electrical installation

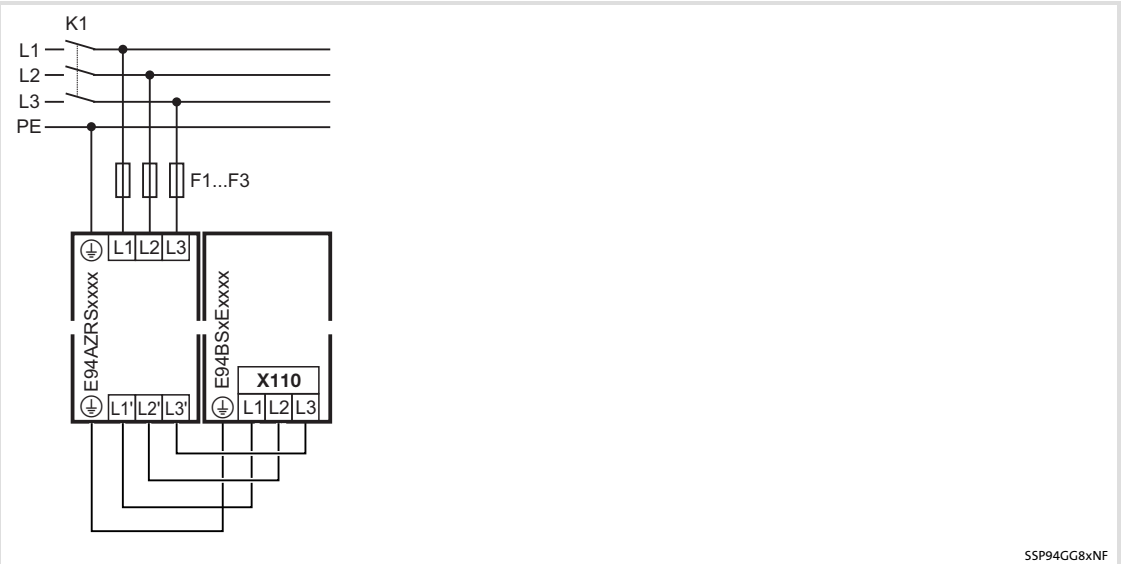

Terminal data L1/L2/L3, L1'/L2'/L3' and PE				
	∅	Tightening torque		
	[mm]	[Nm]	[lb-in]	
E94AZRS1804	M8	9	80	WAF 13
E94AZRS3004	M10	25 ... 30	221 ... 266	SW 17
E94AZRS4154				

8.10.8 RFI filters for power supply modules E94AZRPxxxx (8 ... 29 A)

Assignment of filters to standard devices

RFI filter		DC power supply module	
Type	Device size	Type	Device size
E94AZRP0084	1	E94APNE0104	1
E94AZRP0294	1	E94APNE0364	3
E94AZRP0294	1	E70ACPSx0304x	1

Elements on the filter

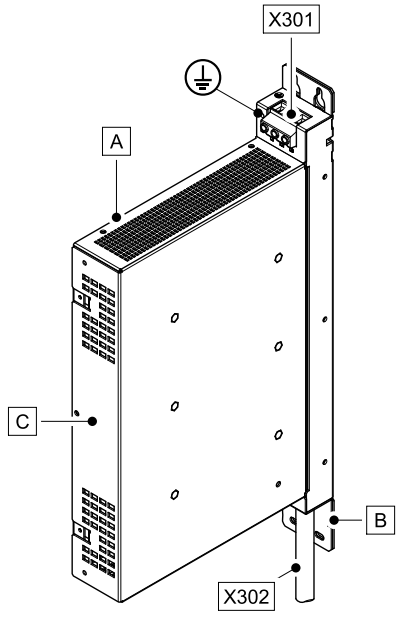

SSP94FF001

Pos.	Description
A	RFI filter E94AZRPxxxx
	Mounting Instructions

Pos.	Description
⏚	Connection of PE conductor
X301	Mains terminal L1 ... L3
X302	Connection cable to DC power supply module, four-core
B	Mounting aid for installation backplane
C	Nameplate

Identification

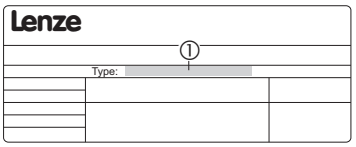

SSP94NF002

	①						
Type code	**E94**	**A**	**Z**	**R**	**P**	**xxx**	**x**
Product range							
Version							
accessories							
RFI filter type							
for 9400 power supply							
Rated current [A]							
Voltage class 4 = 230 ... 400/480 V							

General data

Conformity and approval			
Conformity			
EAC	TP TC 004/2011 (TP ZU 004/2011)	Regarding the safety of low-voltage equipment	Eurasian conformity TR ZU: Technical regulation of the tariff union
EAC	TP TC 020/2011 (TP ZU 020/2011)	Electromagnetic compatibility of technical products	Eurasian conformity TR ZU: Technical regulation of the tariff union
Approval			
$_{C}UR_{US}$	UL508 CSA C22.2 No.14	Industrial Control Equipment, Underwriter Laboratories (File-No. E219022) for USA and Canada	

Mains data		
Mains types		
With grounded neutral (TT/TN systems)	Operation permitted without restrictions	
Other mains types	Observe instructions for special measures in the documentation for the basic device!	

Protection of persons and equipment			
Enclosure	EN 60529	IP20	Not in the wire range of the terminals
	NEMA 250	Protection against contact to type 1	
Earth leakage current	IEC/EN 61800-5-1	> 3.5 mA AC > 10 mA DC	Observe regulations and safety instructions!
Insulation resistance	IEC/EN 61800-5-1	< 2000 m site altitude: overvoltage category III	
		> 2000 m site altitude: overvoltage category II	

Environmental conditions		
Climate		
Storage	IEC/EN 60721-3-1	1K3 (-25 ... +60 °C)
Transport	IEC/EN 60721-3-2	2K3 (-25 ... +70 °C)
Operation	IEC/EN 60721-3-3	3K3 (-10 ... +55 °C) Current derating from +45 ... +55 °C: 2.5 %/°C
Site altitude		0 ... 4000 m amsl 1000 ... 4000 m amsl: current derating of 5 %/1000 m
Pollution	EN 61800-5-1	Degree of pollution 2
Vibration resistance (9.81 m/s² = 1 g)		
Transport	IEC/EN 60721-3-2	2M2
	EN 61800-2	2 ... 9 Hz: Amplitude 3.5 mm
		10 ... 200 Hz: acceleration resistant up to 10 m/s²
		200 ... 500 Hz: acceleration resistant up to 15 m/s²
Operation	Germanischer Lloyd	5 ... 13.2 Hz: Amplitude ±1 mm 13.2 ... 100 Hz: acceleration resistant up to 0.7 g
	IEC/EN 60068-2-6	10 ... 57 Hz: Amplitude 0.075 mm
		57 ... 150 Hz: Acceleration resistant up to 1 g

Mounting conditions		
Mounting place		In the control cabinet
Mounting position		Vertically
Free space		The required free space results from the mounting position and the specifications of the standard device.

Rated data

Mains	Voltage U_{Lrated} [V]	Voltage range U_{Lrated} [V]	Frequency range f [Hz]
3/PE AC	230	180 - 0 % ... 264 + 0 %	45 - 0 % ... 65 + 0 %
3/PE AC	400	320 - 0 % ... 440 + 0 %	45 - 0 % ... 65 + 0 %
3/PE AC	480	340 - 0 % ... 528 + 0 %	45 - 0 % ... 65 + 0 %

	Voltage [V]	Freq. [Hz]	Current [A] ① max. +45° C	Current [A] ① max. +55° C	Number of phases
E94AZRP0084	230/400/480	50/60	8/8/8	6/6/6	3
E94AZRP0294	230/400/480	50/60	29/29/29	21.8/21.8/21.8	3

① Temperature in the control cabinet

	Power loss P_{loss} [W]	Inductance L [mH]	Voltage drop ΔU [V]
E94AZRP0084	20	–	–
E94AZRP0294	50	–	–

Dimensions

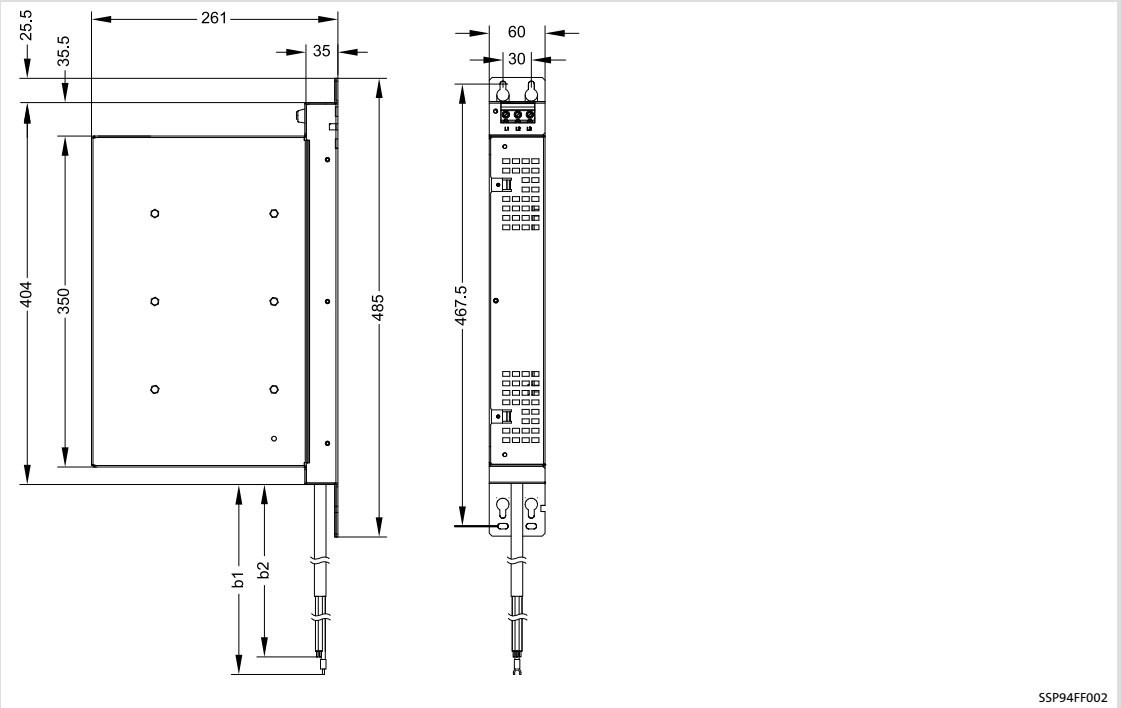

All dimensions in millimetres.

	b1	b2	Mass
	[mm]		[kg]
E94AZRP0084	360 ±5	350 ±5	4.2
E94AZRP0294	430 ±5	420 ±5	4.5

Mechanical installation

For information on this topic, please see the corresponding mounting instructions.

Electrical installation

Connection plan

Standard mounting

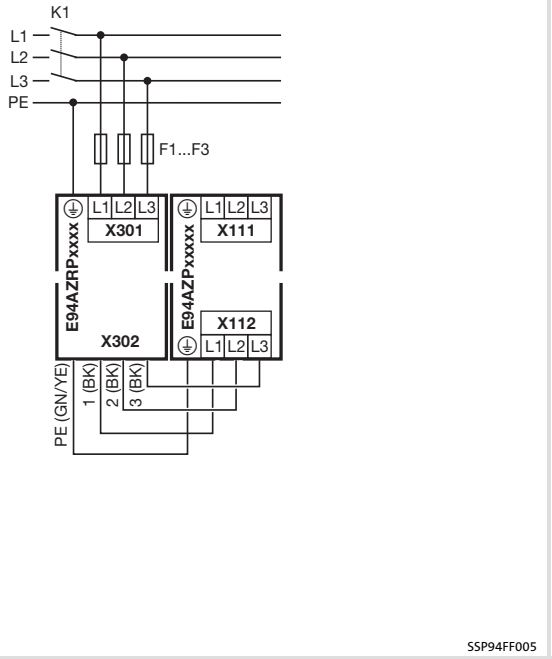

Mounting variant

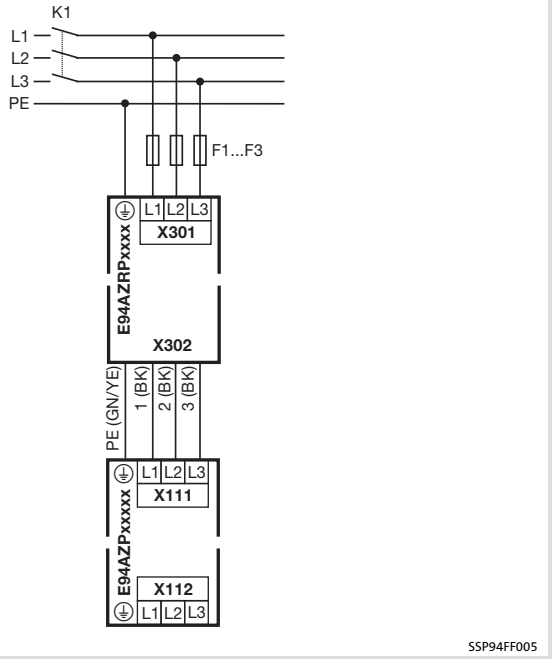

Fig. 8-6 Connection concept

E94AZRPxxxx	RFI filter
E94AZPxxxxx	Installation backplane for 9400 DC power supply module
F1 ... F3	Fuses
K1	Mains contactor

Mains

Terminal X301	Labelling	Description
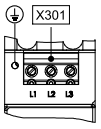 SSP94FF006	L1 L2 L3	Connection of the mains phases L1, L2, L3
	⏚	Connection for the supply-side PE conductor with M5 ring cable lug

Terminal data					
	Max. conductor cross-section		Tightening torque		
	[mm²]	[AWG]	[Nm]	[lb-in]	
E94AZxP0084	10	6	1.2 ... 1.5	10.6 ... 13.3	PH1
E94AZxP0294					

PE connection data				
	∅	Starting torque		
	[mm]	[Nm]	[lb-in]	
E94AZxP0084	M5	3	26.5	SW 8
E94AZxP0294				

Standard device

Cable X302	Labelling	Description
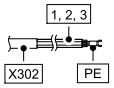 SSP94FF007	1 2 3	Filter output conductor (lead with wire end ferrule, colour BK)
	PE	Output-side PE conductor (lead with M5 fork-type cable lug, colour GN/YE)

Safety instructions for the installation according to UL/CSA

Original - English

Warnings!

Conditions of Acceptability:

- ► The products covered by this report are only intended for use with Power Conversion Equipment (inverters).
- ► Consideration shall be given to the field wiring leads. No strain relief test was performed on the leads.
- ► The devices in this report are only evaluated for factory wiring use.
- ► Temperature tests were performed with hook mounted drive.

Filters RFI filters for power supply modules

Original - French

Avertissement !

Conditions d'acceptabilité :

- Les produits concernés par ce rapport sont destinés exclusivement à être utilisés avec des convertisseurs de puissance (variateurs ou power conversion equipment).
- Une attention particulière doit être apportée aux tresses de câblage à pied d'oeuvre. Aucun test de décharge de traction n'a été réalisé sur ces éléments.
- Les équipements concernés par ce rapport sont évalués exclusivement pour un câblage en usine.
- Les tests de température ont été réalisés avec un entraînement à crochet.

8.10.9 RFI filters for power supply modules E94AZRPxxxx (82 ... 200 A)

Assignment of filters to standard devices

RFI filter		DC power supply module	
Type	Device size	Type	Device size
E94AZRP0824	4	E94APNE1004	4
E94AZRP2004	5	E94APNE2454	5
E94AZRP0824	4	E70ACPSx0604x	2

Elements on the filter

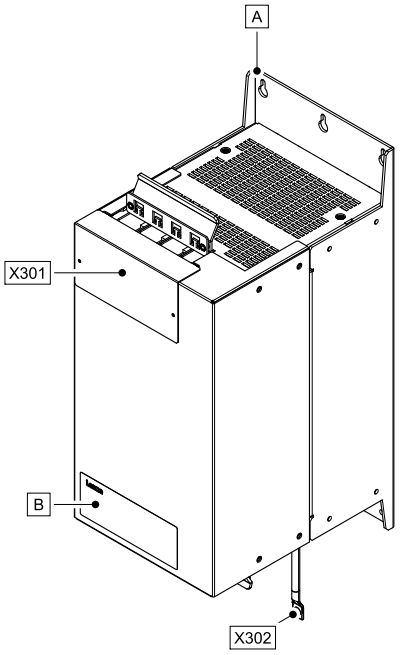

SSP94FF201

Pos.	Description
A	RFI filter E94AZRPxxxx
	Mounting Instructions

Pos.	Description
X301	Mains connection for L1 ... L3 and PE
X302	Connection cables to DC power supply module L1' ... L3' and PE
B	Nameplate

Identification

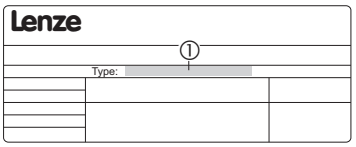

SSP94NF002

	①						
Type code	**E94**	**A**	**Z**	**R**	**P**	**xxx**	**x**
Product range							
Version							
accessories							
RFI filter type							
for 9400 power supply							
Rated current [A]							
Voltage class 4 = 230 ... 400/480 V							

General data

Conformity and approval			
Conformity			
EAC	TP TC 004/2011 (TP ZU 004/2011)	Regarding the safety of low-voltage equipment	Eurasian conformity TR ZU: Technical regulation of the tariff union
EAC	TP TC 020/2011 (TP ZU 020/2011)	Electromagnetic compatibility of technical products	Eurasian conformity TR ZU: Technical regulation of the tariff union
Approval			
$_{C}UR_{US}$	UL508 CSA C22.2 No.14	Industrial Control Equipment, Underwriter Laboratories (File-No. E219022) for USA and Canada	

Mains data		
Mains types		
With grounded neutral (TT/TN systems)	Operation permitted without restrictions	
Other mains types	Observe instructions for special measures in the documentation for the basic device!	

Protection of persons and equipment			
Enclosure	EN 60529	IP20	Not in the wire range of the terminals
	NEMA 250	Protection against contact to type 1	
Earth leakage current	IEC/EN 61800-5-1	> 3.5 mA AC > 10 mA DC	Observe regulations and safety instructions!
Insulation resistance	IEC/EN 61800-5-1	< 2000 m site altitude: overvoltage category III	
		> 2000 m site altitude: overvoltage category II	

Environmental conditions		
Climate		
Storage	IEC/EN 60721-3-1	1K3 (-25 ... +60 °C)
Transport	IEC/EN 60721-3-2	2K3 (-25 ... +70 °C)
Operation	IEC/EN 60721-3-3	3K3 (-10 ... +55 °C) Current derating from +45 ... +55 °C: 2.5 %/°C
Site altitude		0 ... 4000 m amsl 1000 ... 4000 m amsl: current derating of 5 %/1000 m
Pollution	EN 61800-5-1	Degree of pollution 2
Vibration resistance (9.81 m/s² = 1 g)		
Transport	IEC/EN 60721-3-2	2M2
	EN 61800-2	2 ... 9 Hz: Amplitude 3.5 mm
		10 ... 200 Hz: acceleration resistant up to 10 m/s²
		200 ... 500 Hz: acceleration resistant up to 15 m/s²
Operation	Germanischer Lloyd	5 ... 13.2 Hz: Amplitude ±1 mm 13.2 ... 100 Hz: acceleration resistant up to 0.7 g
	IEC/EN 60068-2-6	10 ... 57 Hz: Amplitude 0.075 mm
		57 ... 150 Hz: Acceleration resistant up to 1 g

Mounting conditions		
Mounting place		In the control cabinet
Mounting position		Vertically
Free space		The required free space results from the mounting position and the specifications of the standard device.

Rated data

Mains	Voltage U_{Lrated} [V]	Voltage range U_{Lrated} [V]	Frequency range f [Hz]
3/PE AC	230	180 - 0 % ... 264 + 0 %	45 - 0 % ... 65 + 0 %
3/PE AC	400	320 - 0 % ... 440 + 0 %	45 - 0 % ... 65 + 0 %
3/PE AC	480	340 - 0 % ... 528 + 0 %	45 - 0 % ... 65 + 0 %

	Voltage [V]	Freq. [Hz]	Current [A] ① max. +45° C	Current [A] ① max. +55° C	Number of phases
E94AZRP0824	230/400/480	50/60	82/82/82	61/61/61	3
E94AZRP2004	230/400/480	50/60	200/200/200	150/150/150	3

① Temperature in the control cabinet

	Power loss P_{loss} [W]	Inductance L [mH]	Voltage drop ΔU [V]
E94AZRP0824	80	-	-
E94AZRP2004	150	-	-

Dimensions

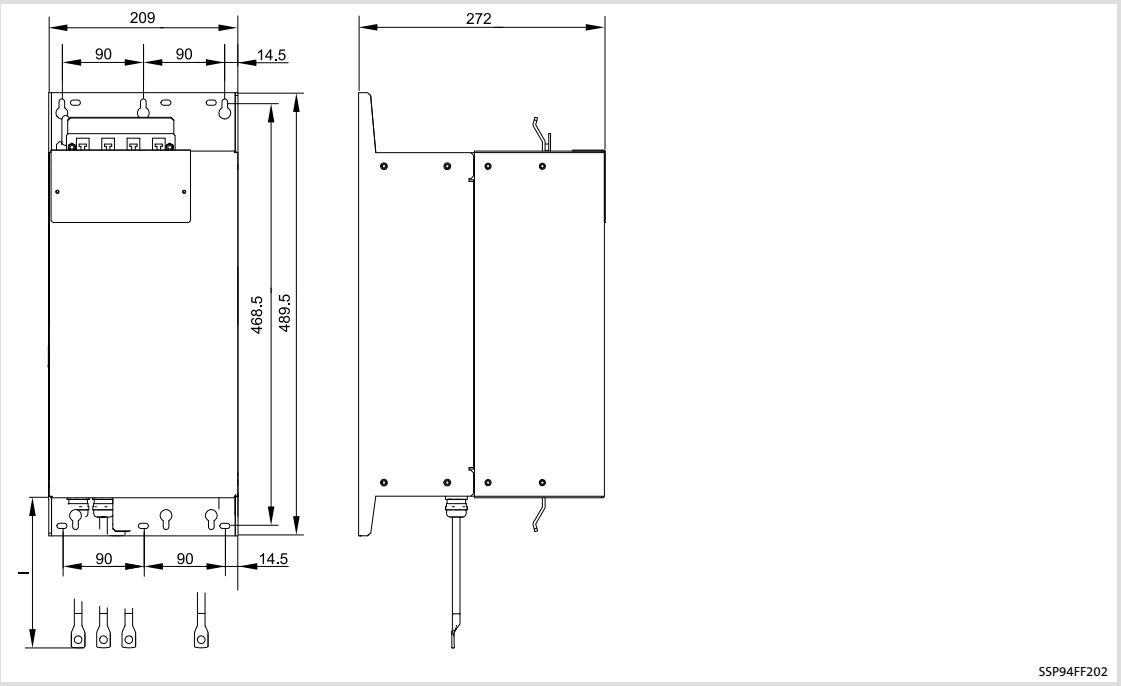

All dimensions in millimetres.

	Dimension l [mm]	Mass [kg]
E94AZRP0824	500 ±10	18.5
E94AZRP2004	600 ±10	21.0

Mechanical installation

For information on this topic, please see the corresponding mounting instructions.

Electrical installation

Connection plan

Standard mounting

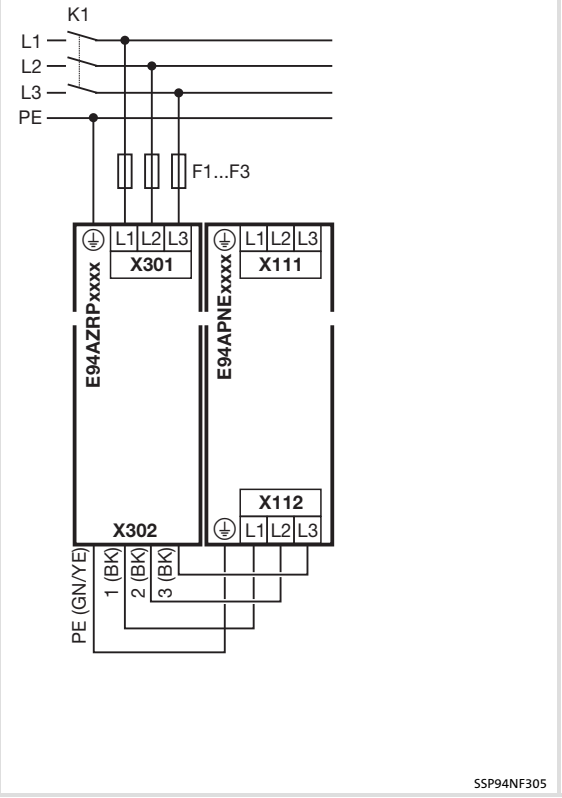

Mounting variant

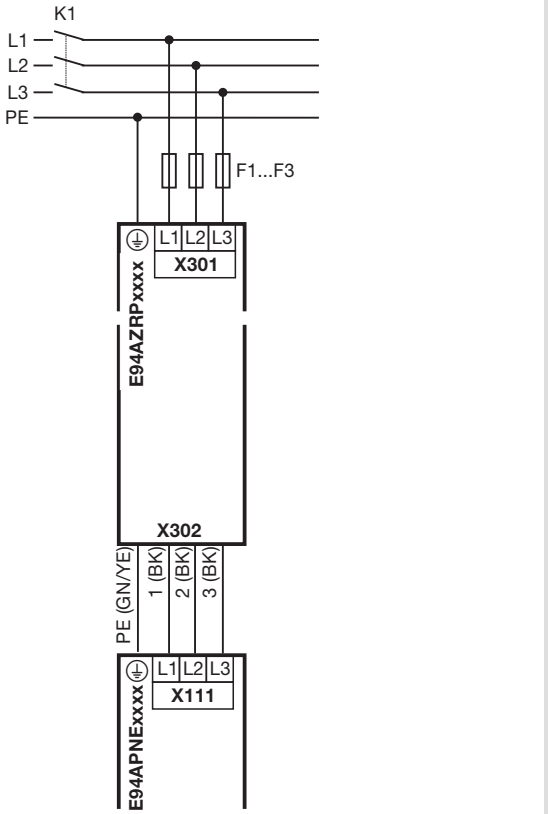

Fig. 8-7 Connection concept

E94AZRPxxxx	RFI filter
E94APNExxxx	9400 DC power supply module
F1 ... F3	Fuses
K1	Mains contactor

Mains

Terminal X301	Labelling	Description
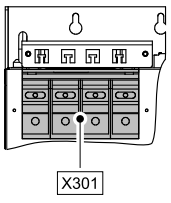 SSP94NF306	L1 L2 L3 PE	Connection of mains phases L1, L2, L3 and PE conductor

Terminal data					
	Max. conductor cross-section		Tightening torque		
	[mm²]	[AWG]	[Nm]	[lb-in]	
E94AZxP0824 Connection with M8 ring cable lug	70 (2 x 70)	2/0	12	106	SW13
E94AZxP2004 Connection with M10 ring cable lug	150 (2 x 120)	250 mcm	20	177	SW15

Standard device

Cable X302	Labelling	Description
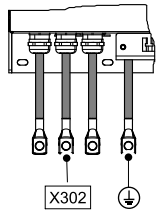 SSP94NF307	L1' L2' L3'	Filter output conductor (lead with ring cable lug, colour BK)
		Output PE conductor (lead with ring cable lug, colour GN/YE)

Safety instructions for the installation according to UL/CSA

Original - English

Warnings!

Conditions of Acceptability:

- ► The products covered by this report are only intended for use with Power Conversion Equipment (inverters).
- ► Consideration shall be given to the field wiring leads. No strain relief test was performed on the leads.
- ► The devices in this report are only evaluated for factory wiring use.
- ► Temperature tests were performed with hook mounted drive.

Filters RFI filters for power supply modules

Original - French

Avertissement !

Conditions d'acceptabilité :

- Les produits concernés par ce rapport sont destinés exclusivement à être utilisés avec des convertisseurs de puissance (variateurs ou power conversion equipment).
- Une attention particulière doit être apportée aux tresses de câblage à pied d'oeuvre. Aucun test de décharge de traction n'a été réalisé sur ces éléments.
- Les équipements concernés par ce rapport sont évalués exclusivement pour un câblage en usine.
- Les tests de température ont été réalisés avec un entraînement à crochet.

8.10.10 Sinusoidal filters EZS3-xxxA200 4 ... 90 A

Elements on the filter

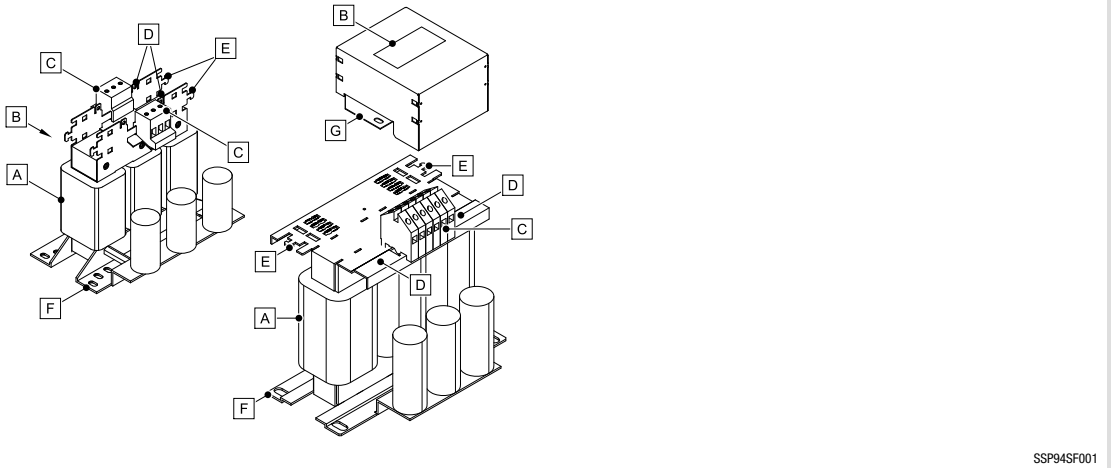

Pos.	Description
A	Sinusoidal filter EZS3-xxxA200
	Mounting Instructions

Pos.	Description
B	Nameplate
C	Terminals (input: 1U1, 1V1, 1W1 / output: 1U2, 1V2, 1W2)
D	PE connection
E	Shield connection
F	Fixing bracket
G	Terminal cover

Identification

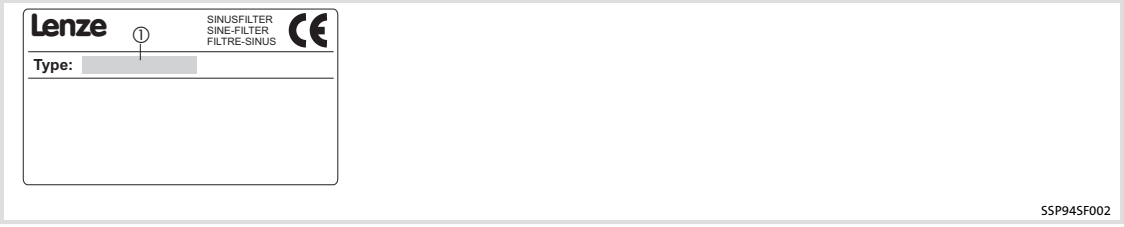

	①						
Type code	**e**	**Z**	**S**	**3**	**-**	**xxxA**	**xxx**

Product series

Accessories

Filter type
S = sinusoidal filter

Phases
3 = 3 phases

Rated current [A] (rounded)

Variant

Operating conditions

A sinusoidal filter (LC filter) in the motor cable limits the rate of rise of voltage (du/dt < 500 V/µs) and the capacitive charge/discharge currents which occur during inverter operation. This enables considerably larger shielded motor cables and the service life of the motor is increased.

The following must be observed when using sinusoidal filters:

- Use sinusoidal filters only together with standard asynchronous machines 0 ... 550 V.
- The operation is only permissible using a V/f or V/f^2 characteristic control.
- The operation is only permissible using a switching frequency of 4 ... 8 kHz.
  - The sinusoidal filter overheats when being operated with a switching frequency < 4 kHz.
  - Ensure that the automatic switching frequency reduction is deactivated (see documentation of the basic device).
- Limit the output frequency to maximally 150 Hz.
- Please note, when dimensioning the controller, that the controller has an additional load of 10 ... 15 %.

General data

Conformity and approval			
CE	2014/35/EU	Low-Voltage Directive	
EAC	TP TC 004/2011 (TP ZU 004/2011)	Regarding the safety of low-voltage equipment	Eurasian conformity TR ZU: Technical regulation of the tariff union
EAC	TP TC 020/2011 (TP ZU 020/2011)	Electromagnetic compatibility of technical products	Eurasian conformity TR ZU: Technical regulation of the tariff union
Approval			
UR	UL508 CSA C22.2 No.14	Industrial Control Equipment, Underwriter Laboratories (File-No. E219022) for USA and Canada	

Protection of persons and equipment			
Enclosure	EN 60529	IP20	
	NEMA 250	Protection against contact to type 1	
Insulation resistance	IEC/EN 61800-5-1	< 2000 m site altitude: overvoltage category III	
		> 2000 m site altitude: overvoltage category II	

Environmental conditions		
Climate		
Storage	IEC/EN 60721-3-1	1K3 (-25 ... +60 °C)
Transport	IEC/EN 60721-3-2	2K3 (-25 ... +70 °C)
Operation	IEC/EN 60721-3-3	3K3 (-10 ... +55 °C) Current derating at +40 ... +55 °C: 2.5 %/°C
Site altitude		0 ... 4000 m amsl 1000 ... 4000 m amsl: Current derating 5 %/1000 m
Pollution	EN 61800-5-1	Degree of pollution 2
Vibration resistance (9.81 m/s² = 1 g)		
Transport	IEC/EN 60721-3-2	2M2
	EN 61800-2	2 ... 9 Hz: Amplitude 3.5 mm
		10 ... 200 Hz: Acceleration resistant up to 10 m/s²
		200 ... 500 Hz: Acceleration resistant up to 15 m/s²
Operation	Germanischer Lloyd	5 ... 13.2 Hz: Amplitude ±1 mm 13.2 ... 100 Hz: Acceleration resistant up to 0.7 g
	IEC/EN 60068-2-6	10 ... 57 Hz: Amplitude 0.075 mm
		57 ... 150 Hz: Acceleration resistant up to 10 m/s²

Mounting conditions		
Mounting place		In the control cabinet, as close as possible to the controller
Mounting position		Dependent on the payload of the control cabinet wall Lightweight filters: suspended, fixing bracket to the sides Heavy filters: vertical, fixing bracket below
Free space		100 mm to the side and above
Connecting cables		
Controller ↔ filter		As short as possible, shielded
Filter ↔ motor		Max. 200 m shielded or max. 300 m unshielded

Rated data

	Voltage	Output frequency	Switching frequency	Rate of rise of voltage
	U [V AC]	f [Hz]	f_{ch} [kHz]	du/dt [V/µs]
EZS3-xxxA200	0 ... 550	0 ... 150	4 ... 8	< 500

	Current	Power loss	Inductance
	I_r [A]	P_V [W]	L [mH]
EZS3-004A200	4.0	50	11.0
EZS3-010A200	10.0	80	5.1
EZS3-017A200	16.5	130	3.1
EZS3-024A200	23.5	160	2.5
EZS3-032A200	32.0	180	2.0
EZS3-037A200	37.0	190	1.7
EZS3-048A200	48.0	200	1.2
EZS3-061A200	61.0	230	1.0
EZS3-072A200	72.0	260	0.95
EZS3-090A200	90.0	300	0.8

Dimensions

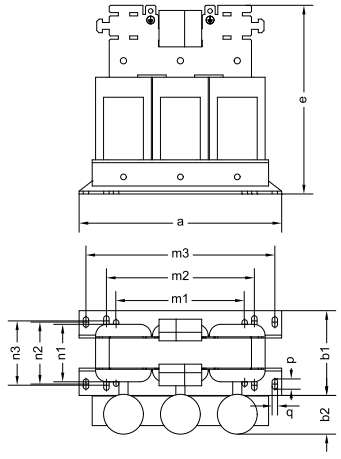

SSP94SF003

Type	a	b1	b2	e	M1	M2	M3	n1	n2	n3	p	q	
	[mm]												[kg]
EZS3-004A200	178	75	36	171	113	130	166	50	55	57	9	5	4.0
EZS3-010A200	178	90	36	171	113	130	166	65	70	72	9	5	5.5
EZS3-017A200	219	111	51	198	136	170	201	67	68	81	13	7	8.5

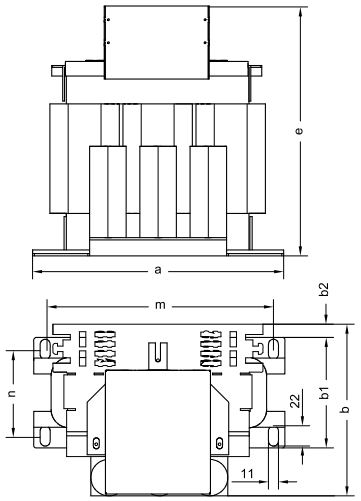

SSP94SF006

Type	a	b	b1	b2	e	m	n	
	[mm]							[kg]
EZS3-024A200	275	190	121	14	280	250	95	14.5
EZS3-032A200	275	200	131	14	280	250	105	19.0
EZS3-037A200	275	210	141	14	280	250	115	21.0
EZS3-048A200	275	245	151	14	290	250	125	25.5
EZS3-061A200	340	240	165	5	315	300	133	33.5
EZS3-072A200	340	265	176	5	325	300	145	37.0
EZS3-090A200	340	292	203	5	325	300	172	53.0

Mechanical installation

For information on this topic, please see the corresponding mounting instructions.

Electrical installation

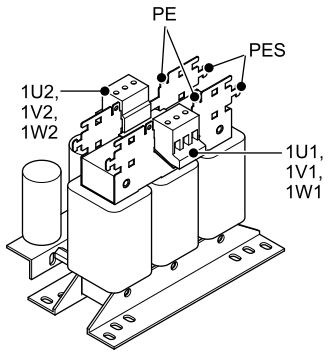

SSP94SF005

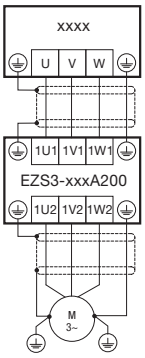

SSP94SF004

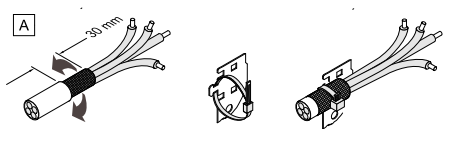

SSP94SF009

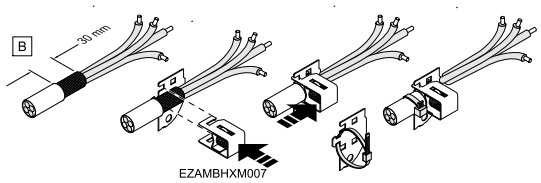

SSP94SF011

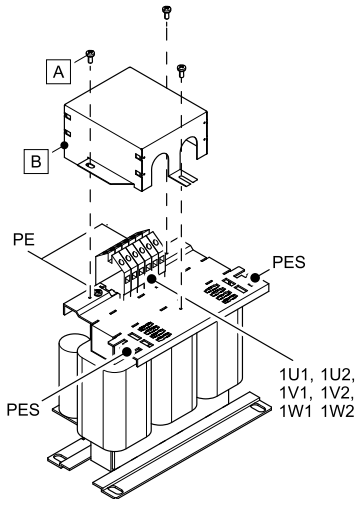

SSP94SF007

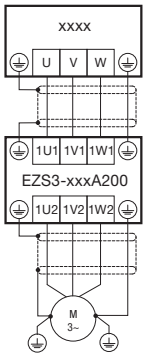

SSP94SF004

Terminal data

Sinusoidal filter	Terminal				PE screw		
	Connection cross-sections		Tightening torque		∅	Tightening torque	
	[mm²]	[AWG]	[Nm]	[lb-in]		[Nm]	[lb-in]
EZS3-004A200	0.2 ... 6	24 ... 10	0.6	5.3	M4	2	17.7
EZS3-010A200							
EZS3-017A200	0.5 ... 16	20 ... 6	1.5	13.3			
EZS3-024A200	2.5 ... 25	10 ... 6	2	17.7	M5	3	26.5
EZS3-032A200							
EZS3-037A200							
EZS3-048A200	2.5 ... 35	12 ... 2	3	26.5			
EZS3-061A200							
EZS3-072A200	16 ... 50	1/0 ... 6					
EZS3-090A200							

Safety instructions for the installation according to UL/CSA

Original - English

Warnings!

Conditions of Acceptability:

- The products covered by this report are only intended for use with Power Conversion Equipment (inverters).
- Appropriate cooling measures shall be taken based on the power loss data within the instructions available from the manufacturer.
- External wiring material for models with bus bar screw connectors - R/C (AVLV2), rated 105 °C min., suitable for applied voltage and current. If wiring material with a lower temperature rating is used, an additional temperature test at the wiring material has to be conducted in the end use.

Original - French

Avertissement !

Conditions d'acceptabilité :

- Les produits concernés par ce rapport sont destinés exclusivement à être utilisés avec des convertisseurs de puissance (variateurs ou power conversion equipment).
- Il convient de prendre des mesures de refroidissement appropriées en fonction de la puissance dissipée, conformément aux instructions fournies par le fabricant.
- Les éléments de câblage externes des modèles avec connecteurs à vis pour barres conductrices (R/C [AVLV2], mininum 105 °C) sont adaptés à la tension et au courant appliqués. En cas d'utilisation d'éléments de câblage conçus pour des températures inférieures, des essais de température supplémentaires doivent être menés sur ces éléments dans les conditions d'application.

8.10.11 Sinusoidal filters EZS3-xxxA200 115 ... 150 A

Elements on the filter

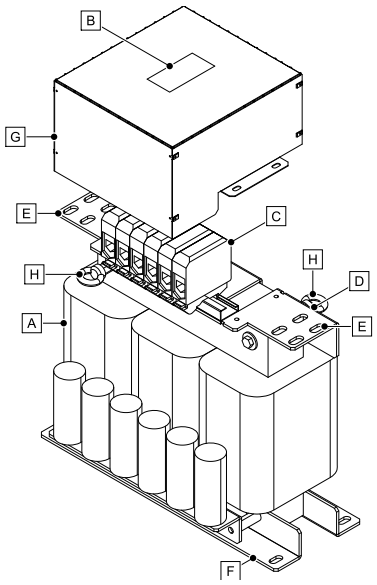

SSP94SF101

Pos.	Description
A	Sinusoidal filter EZS3-xxxA200
	Mounting Instructions

Pos.	Description
B	Nameplate
C	Terminals (input: 1U1, 1V1, 1W1 / output: 1U2, 1V2, 1W2)
D	PE connection
E	Shield connection
F	Fixing bracket
G	Terminal cover
H	Ring bolts

Identification

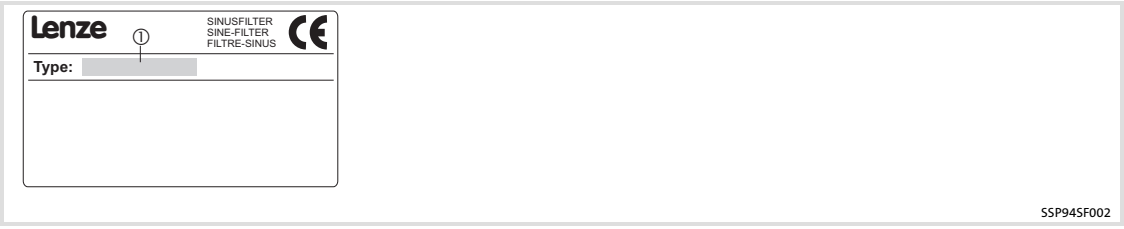

	①						
Type code	**e**	**Z**	**S**	**3**	**-**	**xxxA**	**xxx**

Product series

Accessories

Filter type
S = sinusoidal filter

Phases
3 = 3 phases

Rated current [A] (rounded)

Variant

Operating conditions

A sinusoidal filter (LC filter) in the motor cable limits the rate of rise of voltage (du/dt < 500 V/µs) and the capacitive charge/discharge currents which occur during inverter operation. This enables considerably larger shielded motor cables and the service life of the motor is increased.

The following must be observed when using sinusoidal filters:

- Use sinusoidal filters only together with standard asynchronous machines 0 ... 550 V.
- Operation is only permissible using a V/f or V/f^2 characteristic control.
- Operation is only permissible using a switching frequency of 2 ... 4 kHz.
  - Ensure that the automatic switching frequency reduction is deactivated (see documentation of the standard device).
- Limit the output frequency to maximally 150 Hz.
- Please note when dimensioning the controller that the controller has an additional load of 10 ... 15 %.

General data

Conformity and approval			
CE	2014/35/EU	Low-Voltage Directive	
EAC	TP TC 004/2011 (TP ZU 004/2011)	Regarding the safety of low-voltage equipment	Eurasian conformity TR ZU: Technical regulation of the tariff union
EAC	TP TC 020/2011 (TP ZU 020/2011)	Electromagnetic compatibility of technical products	Eurasian conformity TR ZU: Technical regulation of the tariff union
Approval			
UR	UL508 CSA C22.2 No.14	Industrial Control Equipment, Underwriter Laboratories (File-No. E219022) for USA and Canada	

Protection of persons and equipment			
Enclosure	EN 60529	IP20	
	NEMA 250	Protection against contact to type 1	
Insulation resistance	IEC/EN 61800-5-1	< 2000 m site altitude: overvoltage category III	
		> 2000 m site altitude: overvoltage category II	

Environmental conditions		
Climate		
Storage	IEC/EN 60721-3-1	1K3 (-25 ... +60 °C)
Transport	IEC/EN 60721-3-2	2K3 (-25 ... +70 °C)
Operation	IEC/EN 60721-3-3	3K3 (-10 ... +55 °C) Current derating at +40 ... +55 °C: 2.5 %/°C
Site altitude		0 ... 4000 m amsl 1000 ... 4000 m amsl: Current derating 5 %/1000 m
Pollution	EN 61800-5-1	Degree of pollution 2
Vibration resistance (9.81 m/s² = 1 g)		
Transport	IEC/EN 60721-3-2	2M2
	EN 61800-2	2 ... 9 Hz: Amplitude 3.5 mm
		10 ... 200 Hz: Acceleration resistant up to 10 m/s²
		200 ... 500 Hz: Acceleration resistant up to 15 m/s²
Operation	Germanischer Lloyd	5 ... 13.2 Hz: Amplitude ±1 mm 13.2 ... 100 Hz: Acceleration resistant up to 0.7 g
	IEC/EN 60068-2-6	10 ... 57 Hz: Amplitude 0.075 mm
		57 ... 150 Hz: Acceleration resistant up to 10 m/s²

Mounting conditions		
Mounting place		In the control cabinet, as close as possible to the controller
Mounting position		Dependent on the payload of the control cabinet wall Lightweight filters: suspended, fixing bracket to the sides Heavy filters: vertical, fixing bracket below
Free space		100 mm to the side and above
Connecting cables		
Controller ↔ filter		As short as possible, shielded
Filter ↔ motor		Max. 200 m shielded or max. 300 m unshielded

Rated data

	Voltage	Output frequency	Switching frequency	Rate of rise of voltage
	U [V AC]	f [Hz]	f_{ch} [kHz]	du/dt [V/µs]
EZS3-xxxA200	0 ... 550	0 ... 150	2 ... 4	< 500

	Current	Power loss	Inductance
	I_N [A]	P_V [W]	L [mH]
EZS3-115A200	115	360	0.7
EZS3-150A200	150	400	0.5

Dimensions

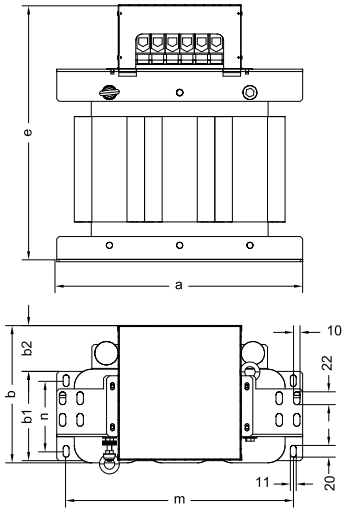

All dimensions in millimetres.

	a	b	b1	b2	e	m	n	
	[mm]						[mm]	[kg]
EZS3-115A200	420	235	153	78.5	444	388	121	66
EZS3-150A200	420	235	168	63.5	444	388	136	69

Mechanical installation

For information on this topic, please see the corresponding mounting instructions.

Electrical installation

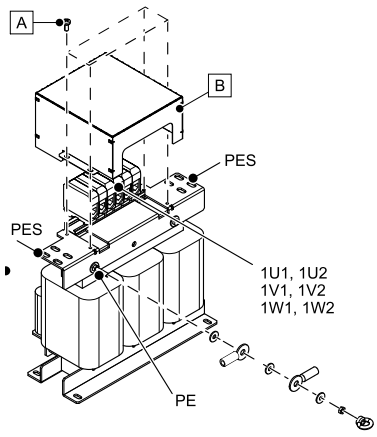

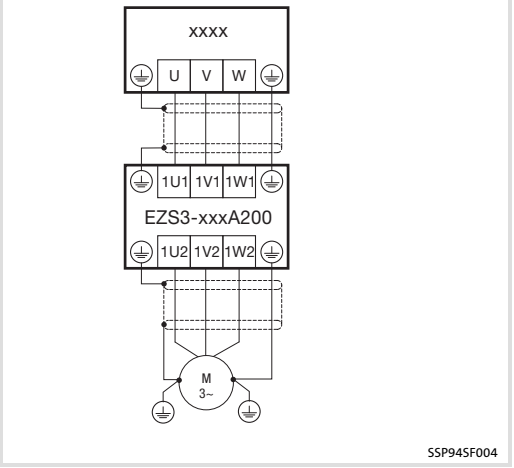

Terminal data

Sinusoidal filter	Terminal				PE screw		
	Connection cross-sections		Tightening torque		∅	Tightening torque	
	[mm²]	[AWG]	[Nm]	[lb-in]		[Nm]	[lb-in]
EZS3-115A200	35 ... 95	4/0 ... 2	6	53.1	M8	18	159.3
EZS3-150A200							

Safety instructions for the installation according to UL/CSA

Original - English

Warnings!

Conditions of Acceptability:

- The products covered by this report are only intended for use with Power Conversion Equipment (inverters).
- Appropriate cooling measures shall be taken based on the power loss data within the instructions available from the manufacturer.
- External wiring material for models with bus bar screw connectors - R/C (AVLV2), rated 105 °C min., suitable for applied voltage and current. If wiring material with a lower temperature rating is used, an additional temperature test at the wiring material has to be conducted in the end use.

Original - French

Avertissement !

Conditions d'acceptabilité :

- Les produits concernés par ce rapport sont destinés exclusivement à être utilisés avec des convertisseurs de puissance (variateurs ou power conversion equipment).
- Il convient de prendre des mesures de refroidissement appropriées en fonction de la puissance dissipée, conformément aux instructions fournies par le fabricant.
- Les éléments de câblage externes des modèles avec connecteurs à vis pour barres conductrices (R/C [AVLV2], mininum 105 °C) sont adaptés à la tension et au courant appliqués. En cas d'utilisation d'éléments de câblage conçus pour des températures inférieures, des essais de température supplémentaires doivent être menés sur ces éléments dans les conditions d'application.

8.10.12 Sinusoidal filters EZS3-xxxA200 180 ... 480 A

Elements on the filter

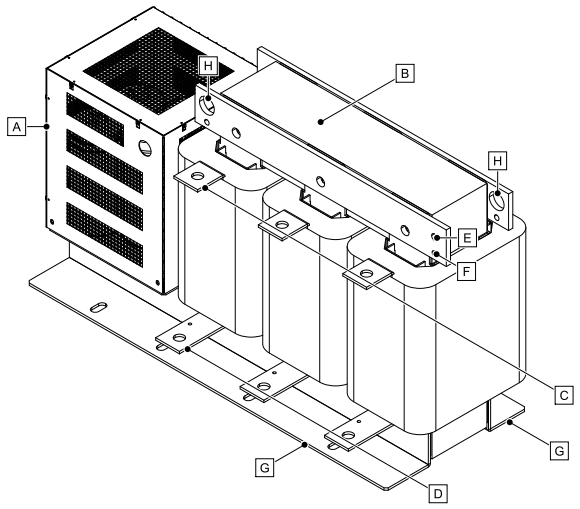

Pos.	Description
A	Sinusoidal filter EZS3-xxxA200
	Mounting Instructions

Pos.	Description
B	Nameplate
C	Connection 1U1, 1V1, 1W1 (inputs)
D	Connection 1U2, 1V2, 1W2 (outputs)
E	PE connection
F	Shield connection
G	Fixing bracket
H	Blocking point for lifting system

Identification

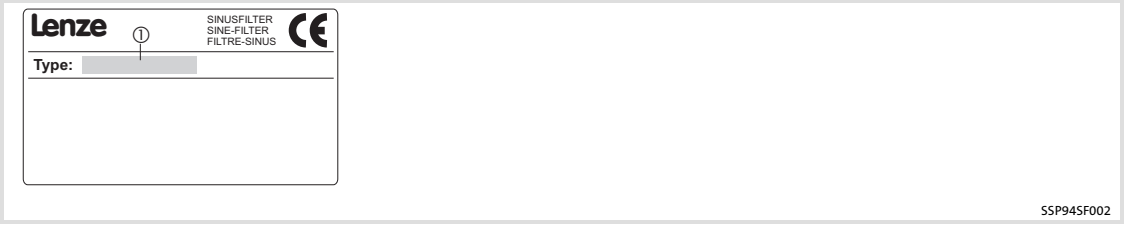

	①						
Type code	**e**	**Z**	**S**	**3**	**-**	**xxxA**	**xxx**

Product series

Accessories

Filter type
S = sinusoidal filter

Phases
3 = 3 phases

Rated current [A] (rounded)

Variant

Operating conditions

A sinusoidal filter (LC filter) in the motor cable limits the rate of rise of voltage (du/dt < 500 V/µs) and the capacitive charge/discharge currents which occur during inverter operation. This enables considerably larger shielded motor cables and the service life of the motor is increased.

The following must be observed when using sinusoidal filters:

- Use sinusoidal filters only together with standard asynchronous machines 0 ... 550 V.
- Operation is only permissible using a V/f or V/f^2 characteristic control.
- Operation is only permissible using a switching frequency of 2 ... 4 kHz.
  - Ensure that the automatic switching frequency reduction is deactivated (see documentation of the standard device).
- Limit the output frequency to maximally 90 Hz.
- Please note, when dimensioning the controller, that the controller has an additional load of 10 ... 15 %.

General data

Conformity and approval			
Conformity			
CE	2014/35/EU	Low-Voltage Directive	
EAC	TP TC 004/2011 (TP ZU 004/2011)	Regarding the safety of low-voltage equipment	Eurasian conformity TR ZU: Technical regulation of the tariff union
EAC	TP TC 020/2011 (TP ZU 020/2011)	Electromagnetic compatibility of technical products	Eurasian conformity TR ZU: Technical regulation of the tariff union

Protection of persons and equipment			
Degree of protection	EN 60529	IP00	
Earth leakage current	IEC/EN 61800-5-1	> 3.5 mA AC > 10 mA DC	Observe regulations and safety instructions!
Insulation resistance	IEC/EN 61800-5-1	< 2000 m site altitude: overvoltage category III	
		> 2000 m site altitude: overvoltage category II	

Environmental conditions		
Climate		
Storage	IEC/EN 60721-3-1	1K3 (-25 ... +60 °C)
Transport	IEC/EN 60721-3-2	2K3 (-25 ... +70 °C)
Operation	IEC/EN 60721-3-3	3K3 (-10 ... +55 °C) Current derating at +40 ... +55 °C: 2.5 %/°C
Site altitude		0 ... 4000 m amsl 1000 ... 4000 m amsl: Current derating 5 %/1000 m
Pollution	EN 61800-5-1	Degree of pollution 2
Vibration resistance (9.81 m/s² = 1 g)		
Transport	IEC/EN 60721-3-2	2M2
	EN 61800-2	2 ... 9 Hz: Amplitude 3.5 mm
		10 ... 200 Hz: Acceleration resistant up to 10 m/s²
		200 ... 500 Hz: Acceleration resistant up to 15 m/s²
Operation	Germanischer Lloyd	5 ... 13.2 Hz: Amplitude ±1 mm 13.2 ... 100 Hz: Acceleration resistant up to 0.7 g
	IEC/EN 60068-2-6	10 ... 57 Hz: Amplitude 0.075 mm
		57 ... 150 Hz: Acceleration resistant up to 10 m/s²

Mounting conditions		
Mounting place		In the control cabinet
Mounting position		Vertical, fixing bracket below
Free space		100 mm to the side and above
Connecting cables		
Controller ↔ filter		As short as possible, shielded
Filter ↔ motor		Max. 200 m shielded or max. 300 m unshielded

Rated data

	Voltage	Output frequency	Switching frequency	Rate of rise of voltage
	U [V AC]	f [Hz]	f_{ch} [kHz]	du/dt [V/µs]
EZS3-xxxA200	0 ... 550	0 ... 90	2 ... 4	< 500

	Current	Power loss	Inductance
	I_N [A]	P_V [W]	L [mH]
EZS3-180A200	180	580	0.40
EZS3-250A200	250	810	0.35
EZS3-350A200	350	1100	0.21
EZS3-480A200	480	1550	0.14

Dimensions

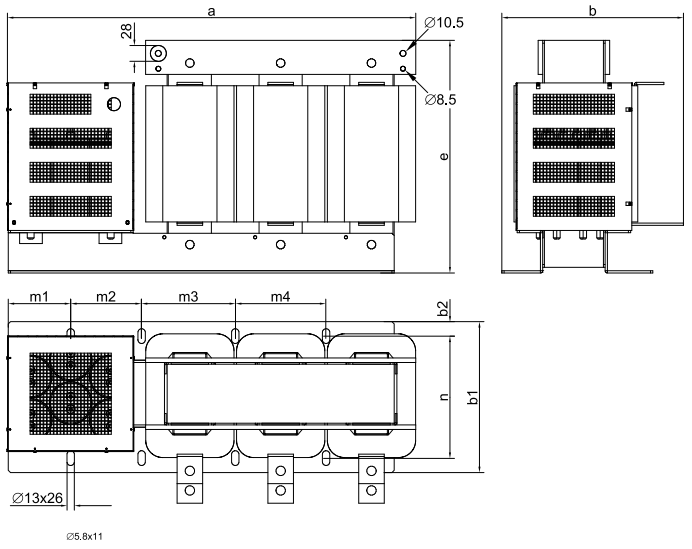

	a	b	b1	b2	e	m1	m2	m3	m4	n	
	[mm]										[kg]
EZS3-180A200	600	270	235	21	324	102.5	117.5	130	160	194.5	97
EZS3-250A200	665	330	290	23	373		122.5	145	140	238.5	152
EZS3-350A200	730	320	268	26	431	110	125	165	160	216.5	172
EZS3-480A200		370	318		426					266.5	244

Mechanical installation

For information on this topic, please see the corresponding mounting instructions.

Electrical installation

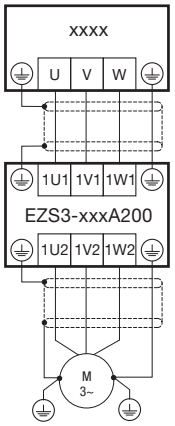

SSP94SF004

Terminal data

	1U1, 1V1, 1W1, 1U2, 1V2, 1W2 ∅	PE ∅	PES ∅
EZS3-180A200	M10	M10	M8
EZS3-250A200	M13		
EZS3-350A200	M16		
EZS3-480A200			

8.11 General accessories

For information about further accessories, please see the ”Servo Drives 9400” catalogue.

8.11.1 Shield mounting

Shield mounting kits facilitate the conductive connection of cable shields with a surface as large as possible. Good shield connections are an important part of wiring according to EMC guidelines. The shield connections on the devices are designed for different installations. If a recommended shield mounting cannot be implemented, e.g. because of thick cables, you can always choose an alternative. The alternative also ensures a good shield connection.

Always implement a strain relief in addition to the shield mounting, since strain relief is not possible with a shield mounting.

Possible installations of the shield connection:

- EMC clip (fixing clip)
  – preferred for control cables or thin motor cables
- EMC wire clamp
  – preferred for motor cables, device-dependent sizes
- Cable tie, metallic
  – preferred for thick motor cables or several cables

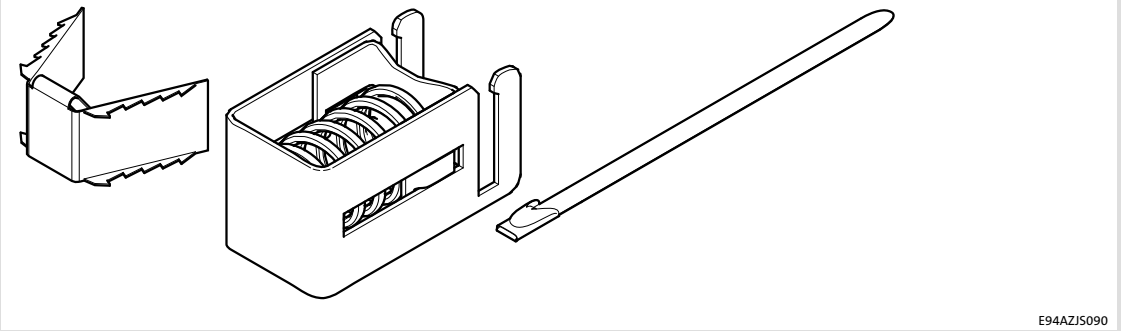

Shield mounting and cable cross-section

Shield mountings contained in the scope of supply of the Servo Drives 9400:

Type			EMC clip (fixing clip)	EMC wire clamp
Axis module	Installation backplane		EZA... (axis module/installation backplane)	(usability depends on installation backplane)
E94xSxE0024 E94xSxE0034	E94AZPS0034	GG1	2/3	-
E94xMxE0024 E94xMxE0034 E94xMxE0044	E94AZPM0044			
E94xSxE0044 E94xSxE0074	E94AZPS0074	GG2	2/2	1 x EZAMBHXM003
E94xMxE0074 E94xMxE0094	E94AZPM0094			
E94xSxE0134 E94xSxE0174 E94xSxE0244	E94AZPS0244	GG3	2/2	1 x EZAMBHXM004
E94xMxE0134 E94xMxE0174 E94xMxE0244	E94AZPM0244			
E94xMxE0324	E94AZPM0324			
E94xSxE0324 E94xSxE0474 E94xSxE0594	-	GG6	3/0	1 x EZAMBHXM003 1 x EZAMBHXM004
E94xMxE0474 E94xMxE0594				
E94xSxE0864 E94xSxE1044	-	GG7	3/0	1 x EZAMBHXM004 1 x EZAMBHXM005
E94xSxE0864 E94xSxE1044	-	GG7	3/0	1 x EZAMBHXM004 1 x EZAMBHXM005
E94BSxE1454	-	GG81	2/0	-
E94BSxE1724 E94BSxE2024 E94BSxB2454	-	GG82	2/0	2 x wire clamps, large (type of C-rail)
E94BSxE2924	-	GG83	2/0	
E94BSxB3664 E94BSxE4604	-	GG91	2/0	

Tab. 8-3 Shield mountings contained in the scope of supply

Shield mountings available as accessories:

Type	EMC clip	EMC wire clamp				Cable tie
Accessory set	EZAMBHXM007 (fixing clip)	EZAMBHXM006 (C02)	EZAMBHXM003 (C03)	EZAMBHXM004 (C04)	EZAMBHXM005 (C05)	EZAMBKBM (metallic)
EZAMBHXM007	20	-	-	-	-	-
EZAMBHXM006	-	10	-	-	-	-
EZAMBHXM003	-	-	10	-	-	-
EZAMBHXM004	-	-	-	10	-	-
EZAMBHXM005	-	-	-	-	10	-
EZAMBKBM	-	-	-	-	-	50

Tab. 8-4 Shield mountings in the accessories - Assignment and VPE

Permissible cable cross-sections (without cable sheath) of the shield mountings:

EMC clip	EMC wire clamp				Cable tie
EZAMBHXM007 (fixing clip)	EZAMBHXM006 (C02)	EZAMBHXM003 (C03)	EZAMBHXM004 (C04)	EZAMBHXM005 (C05)	EZAMBKBM (metallic)
[mm]	[mm]	[mm]	[mm]	[mm]	[mm]
[*in*]	[*in*]	[*in*]	[*in*]	[*in*]	[*in*]
2 ... 11.6 *0.079 ... 0.456*	4 ... 15 *0.157 ... 0.59*	10 ... 20 *0.394 ... 0.787*	15 ... 28 *0.59 ... 1.1*	20 ... 37 *0.79 ... 1.46*	8 ... 30 *0.32 ... 1.18*

Tab. 8-5 Clamping range of shield mountings

Select the shield mounting according to the cable characteristics.

Lenze system cables		EMC clip	EMC wire clamp				Cable tie
A [mm²]	d [mm]	EZAMBHXM007 (fixing clip)	EZAMBHXM006 (C02)	EZAMBHXM003 (C03)	EZAMBHXM004 (C04)	EZAMBHXM005 (C04)	EZAMBKBM (metallic)
standard, shielded							
1.0	10.3	•	•	•	-	-	•
1.5	11.6	•	•	•	-	-	•
2.5	13.2	-	•	•	-	-	•
4.0	14.5	-	•	•	•	•	•
6.0	16.5	-	-	•	•	•	•
10	19.6	-	-	•	•	•	•
suitable for trailing							
1.0	11.2	•	•	•	-	-	•
1.5	12.3	-	•	•	-	-	•
2.5	14.2	-	•	•	-	-	•
4.0	14.8	-	•	•	•	•	•
6.0	17.5	-	-	•	•	•	•
10	20.5	-	-	-	•	•	•

Tab. 8-6 Cable characteristics of Lenze system cables

A Single-core cross-sections of a Lenze system cable (motor)
Standard design or trailing cable

d Cross-section of Lenze system cable/cable shield



Tip!

If a shield mounting cannot be used because of thicker cables, in many cases, an alternative is possible.

For the EMC shield clamp, the EZAMBHXM006 EMC wire clamp or the metal EZAMBKBM cable tie, for example, can be used.

8.11.2 Brake resistors

EMC-compliant wiring

When brake resistors are being wired, the associated installation instructions are to be observed.

Generally applicable rules for wiring connecting cables:

- Keep cable length as short as possible.
- Use a twisted cable for cable lengths up to 0.5 m. A shielded cable is not necessary.
- Use a shield cable for cable lengths from 0.5 m to a maximum of 5 m.
- Always use a twisted cable for monitoring the brake resistor by means of a thermal contact.

These rules should only be deviated from if such a deviation is expressly described for a brake resistor or other application.

Version 1 (short cables)

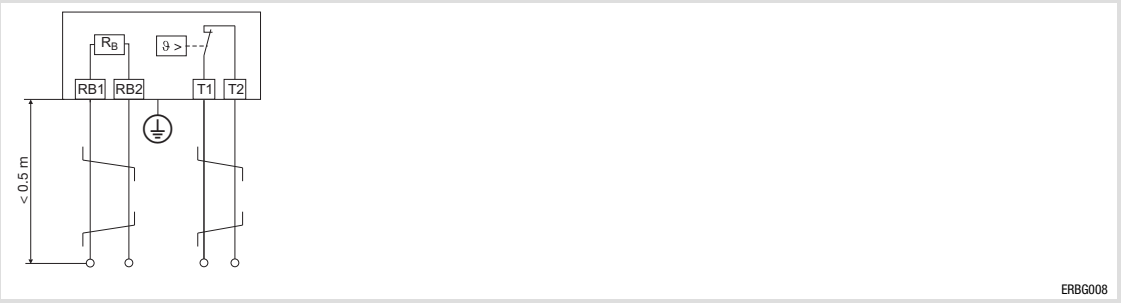

Twisted cables

Version 2 (long cables)

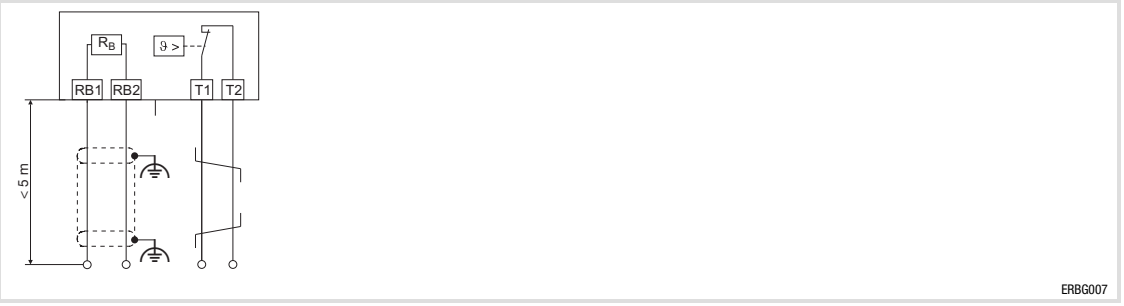

HF-shield termination by extensive PE connection

Twisted cables

Assignment of external brake resistors

Rated mains voltage: U_{Lr} = 400/480 V

For U_{Lr} = 230 V rated voltage, different assignments are applicable.

Note!

Max. permissible connecting cable length brake resistor ↔ device: ≤ 5 m

Single Drive axis module	Brake resistor	Resistance R [Ω]	Continuous power P [W]	Quantity of heat Q_B [kWs]
E94xSxE0024 E94xSxE0034	ERBP082R200W	82	200	30
E94xSxE0044 E94xSxE0074	ERBP047R200W	47	200	30
	ERBS047R400W		400	60
	ERBS047R800W		800	120
E94xSxE0134	ERBP027R200W	27	200	30
	ERBS027R600W		600	90
	ERBS027R01K2		1200	180
E94xSxE0174	ERBP018R300W	18	300	30
	ERBS018R800W		800	120
	ERBS018R02K8		2800	180
E94xSxE0244	ERBP018R300W	18	300	30
	ERBS018R01K2		1200	180
	ERBS018R02K8		2800	420
E94xSxE0324	ERBS018R800W	18	800	120
	ERBS018R01K4		1400	210
	ERBG018R04K3		4300	645
E94xSxE0474	ERBS015R800W	15	800	1500
	ERBS015R02K4		2400	495
	ERBG015R06K2		6200	930
E94xSxE0594	ERBS015R01K2	15	1200	180
	ERBG015R03K3		3300	495
	ERBG015R10K0		10000	1500
E94xSxE0864 E94xSxE1044	ERBG075D01K9	7.5	1900	285
E94BSxE1454	ERBG005R02K6	5	2600	390
E94BSxE1724	ERBG043D03K0	4.3	3000	450
E94BSxE2024	ERBG035D03K3	3.5	3300	495
E94BSxE2454	ERBG028D04K1	2.8	4100	615
E94BSxE2924	ERBG023D05K6	2.3	5600	840
E94BSxE3664	ERBG035D03K3 [2)]	2 * 3.5	3300	495
E94BSxE4604	ERBG028D04K1 [2)]	2 * 2.8	4100	615

2) Zwei Widerstände parallel schalten.

Power supply module	Brake resistor	Resistance R [Ω]	Continuous power P [W]	Quantity of heat QB [kWs]
E94APNE0104	ERBP027R200W	27	200	30
	ERBS027R600W		600	90
	ERBS027R01K2		1200	180
E94APNE0364	ERBG012R01K9	12	1900	285
	ERBG012R05K2		5200	780
E94APNE1004	ERBG005R02K6	5	2600	390
E94APNE2454	ERBG028D04K1	2.8	4100	615

Regenerative power supply module	Brake resistor	Resistance R [Ω]	Continuous power P [W]	Quantity of heat Q_B [kWs]
E94ARNE0134	ERBP027R200W	27	200	30
	ERBS027R600W		600	90
	ERBS027R01K2		1200	180
E94ARNE0244	ERBP018R300W	18	300	30
	ERBS018R01K2		1200	180
	ERBS018R02K8		2800	420

Operating conditions

Climatic conditions	Class 3K3 to EN 50178	Without condensation, average relative humidity 85 %
Ambient temperature	-10 °C ... +55 °C Above 45 °C the permanent power P_d is to be reduced by 2.5 %/°C	
Installation height	0 ... 4000 m amsl Above 1000 m the permanent power P_d is to be reduced by 5 %/1000 m	
Mounting location	● The mounting location must comply with the device features mentioned in the chapter "General data". ● Flammable materials or substances must not be placed in the vicinity of the brake resistor. ● The heat generated by the brake resistor must be dissipated freely.	
Mounting position		
Standard	Vertically suspended with connecting cables at the bottom.	
Variant	Horizontally standing with fixing bracket at the bottom. The permanent power P_d is to be reduced by 30 %!	
Free spaces		
Standard	at the top > 200 mm, to the sides > 25 mm, at the bottom > 100 mm	
Variant	at the top > 200 mm, to the sides > 45 mm, at the bottom > 45 mm	
Design and project planning	● Mean value of regenerative power < permanent power P_d of brake resistor. ● Regenerative power during braking time < heat quantity Q_B of brake resistor. ● Braking time < 10 % of cycle time (braking time + dead time). ● Always connect the thermal contact and integrate it in a way into the system monitoring that the mains supply will be switched off when the basic device is overheated.	

Scope of supply

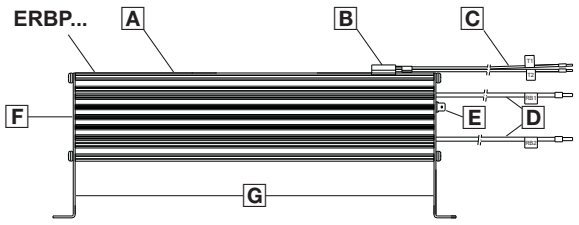

ERBP001

Pos.	Description
	Brake resistor
	Mounting Instructions

Brake resistor elements

Pos.	Description
A	Nameplate
B	Thermal contact
C	Connecting cable thermal contact
D	Connecting cable brake resistor
E	PE connection
F	Warning note
G	Fixing bracket

Identification

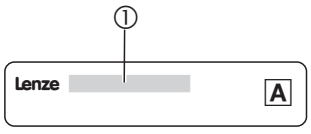

ERBMXXX011

	①		
Type code	**ERBx**	**xxxx**	**xxxx**
Product series			
Resistance R_B [Ω] e.g. 470R = 470 Ω 075D = 7.5 Ω			
Permanent power P_d [W] e.g. 120W = 120 W 01k2 = 1.2 kW			

General data

Conformity and approval			
Conformity			
CE	2014/35/EU	Low-Voltage Directive	
EAC	TP TC 004/2011 (TP ZU 004/2011)	Regarding the safety of low-voltage equipment	Eurasian conformity TR ZU: Technical regulation of the tariff union
Approval			
CURUS	UL508 CSA C22.2 No. 14	Industrial Control Equipment, Underwriter Laboratories (File-No. E232497) for USA and Canada	

Protection of persons and equipment		
Enclosure	EN 60529	IP21
	NEMA 250	Protection against contact to type 1
Thermal contact		
Design		NC contact, 180 °C
Switching capacity		250 V AC / 4 A

Rated data

Electrical data

	R_B	P_d	Q_B	U_{max}
	[Ω]	[W]	[kWs]	[V_{DC}]
ERBP018R300W	18	300	30	800
ERBP027R200W	27	200	30	
ERBP033R200W	33	200	30	
ERBP033R300W		300	45	
ERBP047R200W	47	200	30	
ERBP082R200W	82	200	30	
ERBP180R200W	180	200	30	
ERBP180R300W		300	45	

R_B	Resistance
P_d	Permanent power
Q_B	Heat quantity
U_{max}	Max. operating voltage

Installation steps

For information on this topic, please see the corresponding mounting instructions.

Scope of supply

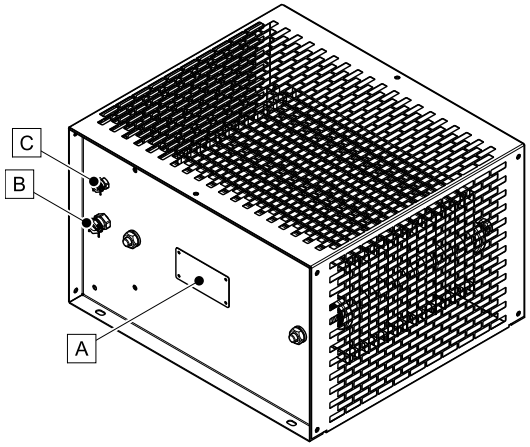

ERBG001

Pos.	Description
	Brake resistor
	Mounting Instructions

Brake resistor elements

Pos.	Description
A	Nameplate
B	Cable gland for brake resistor cable
C	Cable gland for thermal contact cable

Identification

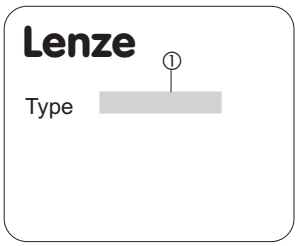

ERBG002

	①		
Type code	**ERBx**	**xxxx**	**xxxx**
Product series			
Resistance R_B [Ω] e.g. 470R = 470 Ω 075D = 7.5 Ω			
Permanent power P_d [W] e.g. 120W = 120 W 01k2 = 1.2 kW			

General data

Conformity and approval			
Conformity			
CE	2014/35/EU	Low-Voltage Directive	
EAC	TP TC 004/2011 (TR CU 004/2011)	On safety of low voltage equipment	Eurasian Conformity TR CU: Technical Regulation of Customs Union
Approval			
UR	UL508	Industrial Control Equipment, Underwriter Laboratories (File-No. E221095) for USA and Canada	
Enclosure	EN 60529	IP20	
	NEMA 250	Protection against contact to type 1	
Thermal contact			
Design		NC contact, 100 °C	
Switching capacity		250 V AC / 2.5 A 110 V AC / 1.6 A	

Rated data

Electrical data

	R_B	P_d	Q_B	U_{max}
	[Ω]	[W]	[kWs]	[V_{DC}]
ERBG023D05K6	2.3	5600	840	1000
ERBG028D04K1	2.8	4100	615	
ERBG035D03K3	3.5	3300	495	
ERBG043D03K0	4.3	3000	450	
ERBG005R02K6	5.0	2600	390	
ERBG075D01K9	7.5	1900	285	
ERBG012R01K9	12.0			
ERBG012R05K2		5200	780	
ERBG015R03K3	15.0	3300	495	
ERBG015R06K2		6200	930	
ERBG015R10K0		10000	1500	
ERBG018R04K3	18.0	4300	645	

R_B	Resistance
P_d	Permanent power
Q_B	Heat quantity
U_{max}	Max. operating voltage

Dimensions

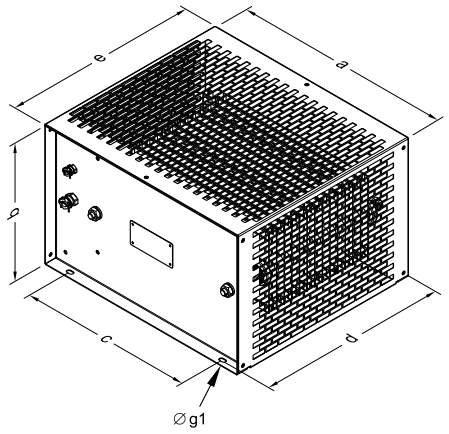

ERBG003

	a	b	c	d	e	g1	m
	[mm]						[kg]
ERBG023D05K6	486	302	380	400	426	6.3	15.9
ERBG028D04K1							12.8
ERBG035D03K3				300	326		12.6
ERBG043D03K0							11.8
ERBG005R02K6							11.0
ERBG075D01K9				210	236		9.5
ERBG012R01K9							
ERBG012R05K2				400	426		15.1
ERBG015R03K3				300	326		12.6
ERBG015R06K2				500	526		17.0
ERBG015R10K0				710	736		22.0
ERBG018R04K3				400	426		13.5

Free spaces for standard mounting

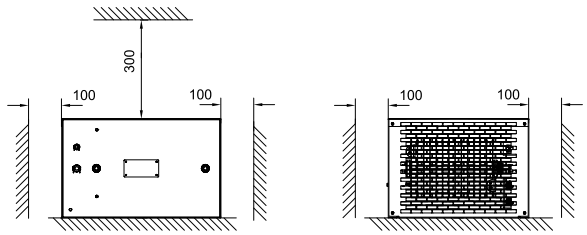

ERBG005

All dimensions in millimetres.

Free spaces for mounting variant

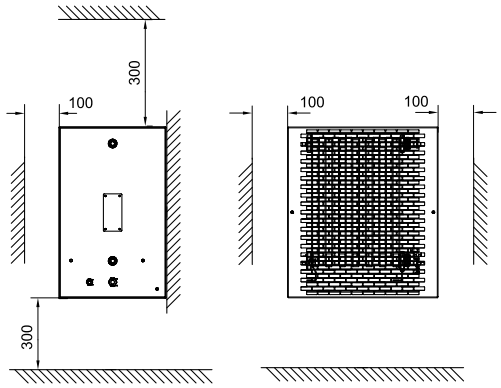

ERBG006

All dimensions in millimetres.

Installation steps

For information on this topic, please see the corresponding mounting instructions.

Scope of supply

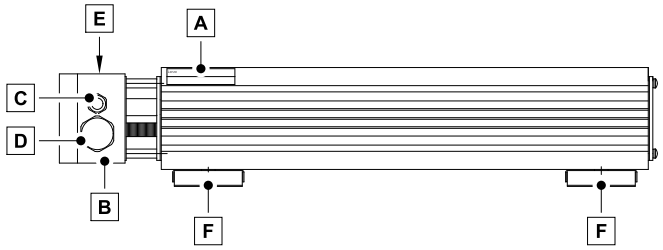

ERBS101

Pos.	Description
	Brake resistor
	Mounting Instructions

Brake resistor elements

Pos.	Description
A	Nameplate
B	Terminal box
C	Cable gland for thermal contact cable
D	Cable gland for brake resistor cable
E	Warning note
F	Fixing bracket

Identification

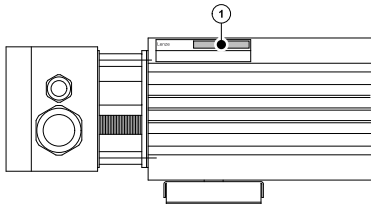

ERBS104

	①		
Type code	**ERBx**	**xxxx**	**xxxx**
Product series			
Resistance R_B [Ω] e.g. 470R = 470 Ω 075D = 7.5 Ω			
Permanent power P_d [W] e.g. 120W = 120 W 01k2 = 1.2 kW			

General data

Conformity and approval			
Conformity			
CE	2014/35/EU	Low-Voltage Directive	
EAC	TP TC 004/2011 (TR CU 004/2011)	On safety of low voltage equipment	Eurasian Conformity TR CU: Technical Regulation of Customs Union
Approval			
CURUS	UL508 CSA C22.2 No. 14	Industrial Control Equipment, Underwriter Laboratories (File-No. E232497) for USA and Canada	

Protection of persons and equipment		
Enclosure	EN 60529	IP65
	NEMA 250	Protection against contact to type 4
Thermal contact		
Design		NC contact, 230 °C
Switching capacity		250 V AC / 5 A

Rated data

Electrical data

	R_B	P_d	Q_B	U_{max}
	[Ω]	[W]	[kWs]	[V_{DC}]
ERBS015R800W	15	800	120	800
ERBS015R01K2		1200	180	
ERBS015R02K4		2400	420	
ERBS018R800W	18	800	120	
ERBS018R01K2		1200	180	
ERBS018R01K4		1400	210	
ERBS018R01K9		1900	285	
ERBS018R02K8		2800	420	
ERBS027R600W	27	600	90	
ERBS027R01K2		1200	180	
ERBS027R01K4		1400	210	
ERBS047R400W	47	400	60	
ERBS047R800W		800	120	

R_B	Resistance
P_d	Permanent power
Q_B	Heat quantity
U_{max}	Max. operating voltage

Dimensions

Design 1

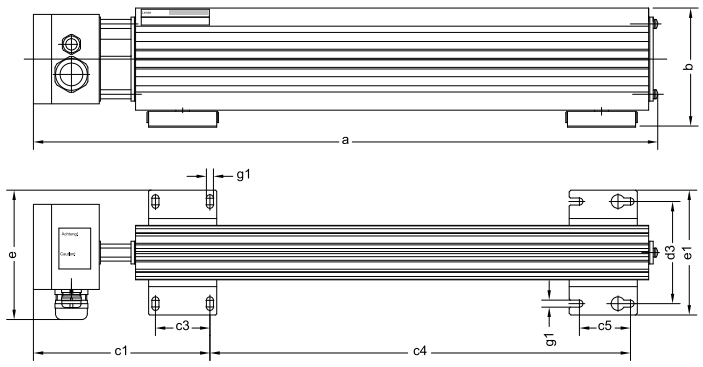

ERBS102

All dimensions in millimetres.

	a	b	c1	c3	c4	c5	d3	e	e1	g1	m
	[mm]										[kg]
ERBS015R800W	710	105	155.5	48	531	45	90	114	110	6.2	4.0
ERBS015R01K2	1020				841						5.6
ERBS018R800W	710				531						4.0
ERBS018R01K2	1020				841						5.6
ERBS018R01K4	1110				931						6.3
ERBS027R600W	550				371						3.1
ERBS027R01K2	1020				841						5.6
ERBS027R01K4	1110				931						6.3
ERBS047R400W	400				221						2.3
ERBS047R800W	710				531						4.0

Design 2

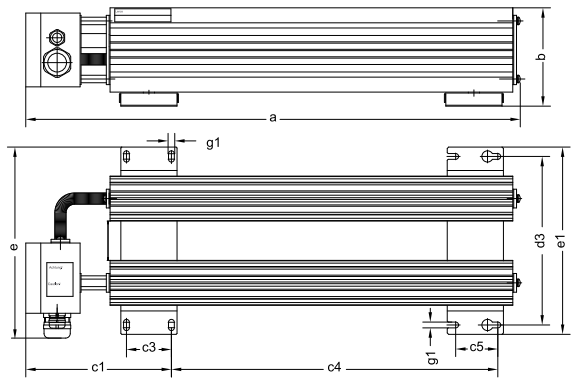

ERBS107

All dimensions in millimetres.

	a	b	c1	c3	c4	c5	d3	e	e1	g1	m
	[mm]							[mm]			[kg]
ERBS015R02K4	1020	105	155.5	48	841	45	180	204	200	6.2	10.0
ERBS018R01K9	825				646						8.7
ERBS018R02K8	1110				931						12.0

Free spaces for standard mounting

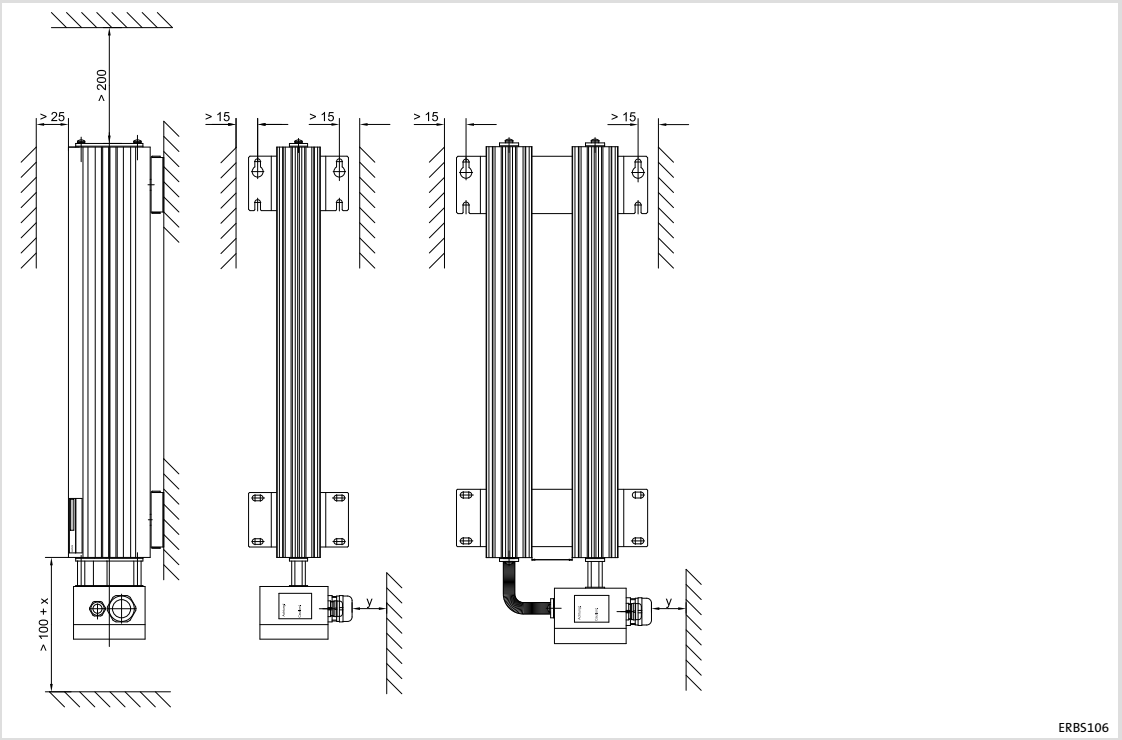

x Wiring clearance
y Cable bending radius
All dimensions in millimetres

Free spaces for mounting variant

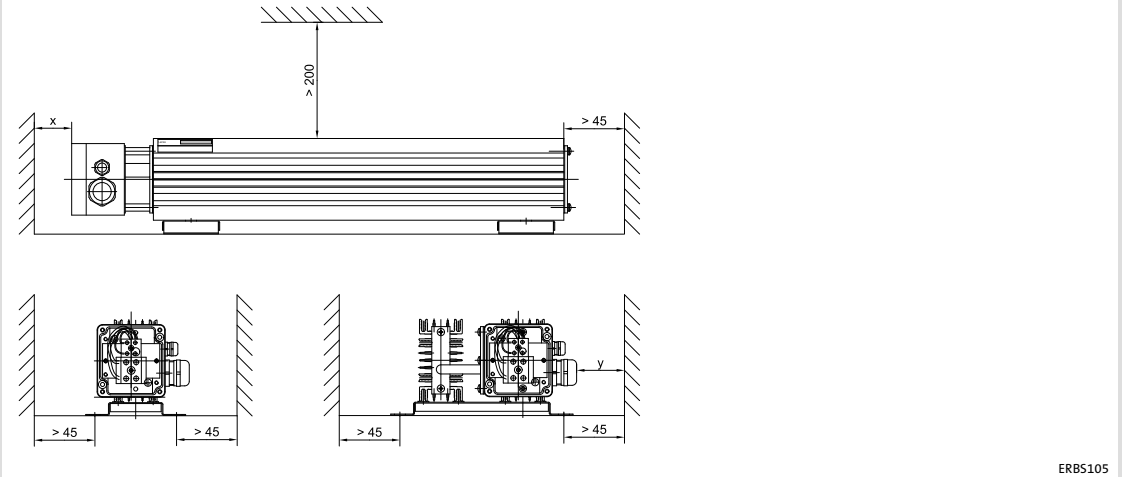

x Wiring clearance
y Cable bending radius
All dimensions in millimetres

Installation steps

For information on this topic, please see the corresponding mounting instructions.

8.11.3 Power supply unit

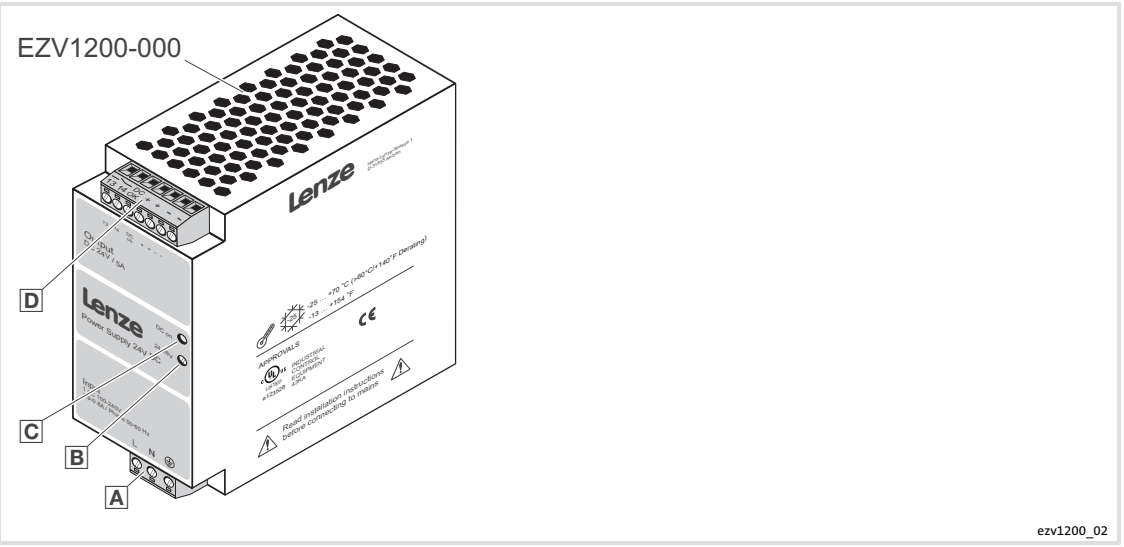

Elements

Pos.	Description
A	Input terminals (L, N, ⏚)
B	Potentiometer for setting the output voltage (24 ... 28 V)
C	LED for function monitoring (DC on)
D	Output terminals (+, -, DC o.k., 13, 14)

Overview

Power supply unit	Mains voltage V_{LN} [V]	Output voltage V_A [V]	Output current I_A [A]
EZV1200-000	1/N AC 230	DC 24	5
EZV1200-001	3 AC 400		
EZV2400-000	1/N AC 230		10
EZV2400-001	3 AC 400		
EZV4800-000	1/N AC 230		20
EZV4800-001	3 AC 400		

Connection plan

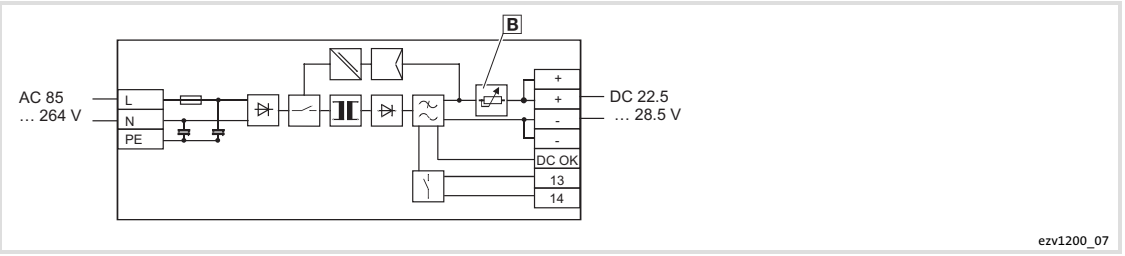

[B] Potentiometer

At DC OK: 24 V, max. 40 mA

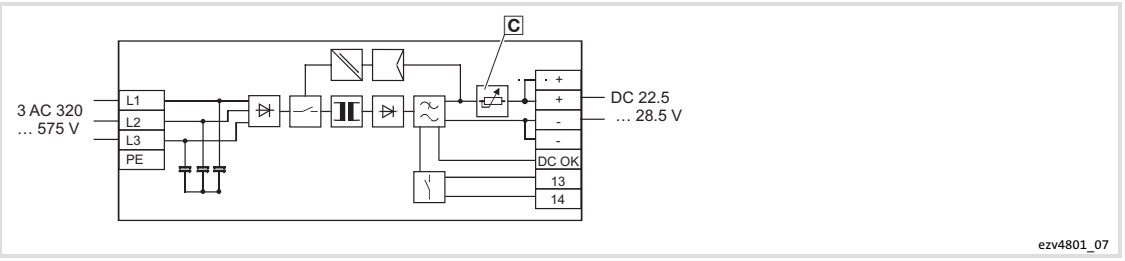

[C] Potentiometer

At DC OK: 24 V, max. 40 mA

Terminal data

	Input terminals	Output terminals
Rigid terminal	0.2 … 2.5 mm^2 (AWG 24 … 12)	0.2 … 2.5 mm^2 (AWG 24 … 12)
Flexible terminal with wire end ferrule with plastic collar	0.2 … 2.5 mm^2 (AWG 24 … 12)	0.2 … 2.5 mm^2 (AWG 24 … 12)
Stripping length	7 mm	7 mm
Tightening torque	0.5 … 0.6 Nm (4.4 … 5.3 lb-in)	0.5 … 0.6 Nm (4.4 … 5.3 lb-in)

Function monitoring

The LED, the active ”DC OK” switching output and a potential-free contact provide the function monitoring.

LED	”DC OK” switching output	Potential-free contact	Output voltage	Info
AN	V = 24 V	closed	V_{output} > 0.9 U_{input}	Device is in operation, ● the output voltage V_{output} is higher than 90 % of the set voltage V_{input} ● the output current is in the permissible range
BLINKING	U = 0 V	open	V_{output} < 0.9 V_{input}	Device is in operation but ● error at the load ● current consumption is higher than I_{BOOST} ● output is short-circuited
OFF	U = 0 V	open	V_{output} = 0	Device is out of service because ● no mains voltage is applied ● the circuit-breaker is activated ● the device is defect

Note!

The device is defective and needs to be replaced if the mains voltage is applied, a short circuit can be excluded and an output voltage of V_{output} = 0 V is measured.

Standards

Conformity and approval			
Conformity			
CE	2014/35/EU	Low-Voltage Directive	
CE	2014/30/EU	EMC Directive	
EAC	TP TC 004/2011 (TR CU 004/2011)	On safety of low voltage equipment	Eurasian Conformity TR CU: Technical Regulation of Customs Union
EAC	TP TC 020/2011 (TR CU 020/2011)	Electromagnetic compatibility of technical means	Eurasian Conformity TR CU: Technical Regulation of Customs Union
Approval			
$_{c}UL_{US}$	UL508	Power Conversion Equipment (File No. E132659) für USA	
	CSA C22.2 No. 14	Power Conversion Equipment (File No. E132659) für Canada	

General data/conditions of use		
Vibration resistance	up to 30 g	according tol IEC 68-2-27
Climatic conditions	Class 3K3	according to EN 60 721
Degree of pollution	2	according to EN 50 178
Permissible temperature ranges		
Storage	-40 °C ... +85 °C	
Operation	-25 °C ... +70 °C	Over +60 °C, reduce the output current by 2.5 %/°C
Humidity	< 95 %	At +25 °C, no condensation
Installation clearance	> 50 mm	above/below

General electrical data		
Degree of protection	IP 20	
Class of protection	I	with PE connection
Leakage current to PE	< 3.5 mA	
MTBF	> 500 000 h	to IEC 1709 (SN 29 500)

Input data	
Turn-on time	< 1 s after applying the mains voltage
Transient surge voltage protection	varistor

Output data		
Rated output voltage U_N	DC 24 V / ± 1 %	
Setting range of the output voltage	DC 22.5 ... 28.5 V	
Start of unlimited capacitive loads	yes	
Residual ripple / switching peaks (20 MHz)	< 100 mV_{SS}	with rated values
Can be connected in parallel	to increase redundancy and power	
Resistance to return supply	DC 35 V	

Dimensioning

The control level of the Servo Drives 9400 series is supplied with 24 V DC. To meet the requirements of typical applications, the 24-V supply has been implemented in a way allowing internal or external supply. For some components, external supply is absolutely necessary.

- The additional current requirements for extensions and components added to the modular structure must be considered.
- A separate 24-V supply is implemented via the connection of the basic device to operate the control section independently of the power section.
  - Communication modules are internally supplied.
  - Separate and external supply is absolutely necessary for: safety units.
- The control section of Single Drive controllers can supply itself from the power section. In this case, there is no external current required for the components and their modules.
  - E.g. for controllers for single drives without communication or without requirements on their availability (special case)
- Multi Drive controllers and power supply modules always require an external 24-V supply.

Typical current requirement of the 24-V supply for basic devices and modules or components (*with example*):

Current requirement of 24-V supply					
Type	GG	Connection	I_{24V} [mA]	Quantity	Total [mA]
Power supply modules					
E94APNE0104	1	X11	450	*1*	*450*
E94APNE0364	3		450		
E94APNE1004	4		1400		
E94APNE2454	5		1400		
Regenerative power supply modules					
E94ARNE0134	1	X11	620		
E94ARNE0244	3		620		
Multi Drive					
E94xMxE0024 E94xMxE0034 E94xMxE0044	1	X2	1120	*5*	*5600*
E94xMxE0074 E94xMxE0094	2	X2	1220		
E94xMxE0134 E94xMxE0174 E94xMxE0244 E94xMxE0324	3	X2	1470		
E94xMxE0474 E94xMxE0594	6	X2	660		
Single Drive					
E94xSxE0024 ... E94xSxE0244	1 ... 3	X2	620		
E94xSxE0324 ... E94xSxE1044	6 ... 7	X2	660		
E94BSxE1454 ... E94BSxE4604	81 ... 91	X2	660		

Current requirement of 24-V supply					
Type	**GG**	**Connection**	**[mA]**		**[mA]**
Connections					
Keypad EZAEBK...		X6	50	*5*	*250*
Digital outputs		X4	70	*6*	*420*
Analog outputs		X3	10		
Memory modules (MMI)					
MMxxx E94AYM...		-	20	*5*	*100*
Feedback					
Encoder		X8	110		
Resolvers		X7	20	*5*	*100*
Communication (MXI1/MXI2)					
CANopen® E94AYCCA		X	30		
DeviceNet™ E94AYCDN		X225	130		
Ethernet 2 port		-	60		
EtherNet/IP™		X232	130		
POWERLINK E94AYCEP POWERLINK CN E94AYCEC		X210/X250	140		
EtherCAT®		X245	130		
PROFIBUS E94AYCPM		X200	130	*5*	*650*
PROFINET E94AYCER		X240	140		
INTERBUS		X205	180		
Safety system (MSI)					
SM0 E94AYAA		-	0	*2*	*0*
SM100 E94AYAB		X80	200	*3*	*600*
- digital output			max. 700	*5 x 10 %*	*350*
SM301 E94AYAD		X80.2	350		
- clock output			50		
- safe digital output		X80.1	500		
				Example values in italics	
Result: current requirement of 24-V supply					
				Sum total [mA]:	*8520*
				Sum total [A]:	*8.5*

Notes:

- The current requirement refers to the nominal voltage of 24 V. With a lower voltage, the current requirement increases linearly.
- The values are maximum values. If the real currents are known, this can be considered accordingly in the table.
- The typical current consumption is approx. 10 ... 20 % lower.
- When selecting the power supply unit, observe that there will flow a substantially higher current for a short time when switching on the power supply unit. Select power supply units that can supply this overcurrent and do not switch off.
- The indicated current is a continuous current. If consumers are connected, more current is required in the starting phase (e.g. device fans). Power supply units therefore must have dynamic reserves.

Note!

When several devices are switched on, a very high initial charging current is required. Power supply units without current limitation can be overloaded (fault).

Lenze power supply units are equipped with an internal starting current limitation. When several devices are switched on, no faults will occur.

9 Index

Zahlen

9400
- Features, 10
- System description, 10

A

Accessories, 365
- Brake resistors, 619
- General, 616

Address switch, 442

Application, as directed, 20

application as directed, 20

Application range, 414, 431, 437, 505, 525, 528, 531

Approval, 599, 607, 625

B

Brake resistors, 619

Braking operation, in a drive system, 362

Bus cable length, 396

C

Cable specification, 402, 407

Cable specifications, 373

CAN bus
- setting baud rate, 420
- setting node address, 420

CAN cable specification, 407

CANopen, 406

CE conformity, 20

CIP status displays, 389

Clearances, 34, 170, 243, 291

Commissioning steps, 506

Communication module, connections, 400, 407

Communication modules, 370

Conformity, 20

Connection
- communication module connections, 400
- Sub-D plug connector, 9-pin, 407
- Sub-D socket, 9-pin, 400

Connection plan, 323, 458, 464, 471, 478, 483, 489, 495, 500, 522, 587, 594, 633

Connections, 375, 377, 382, 385, 393, 399, 404, 406, 410, 415, 431, 502

Control terminals, 148, 222, 285

Controller
- application as directed, 20
- labelling, 20

D

DC-bus connection, Braking in, 362

DC-bus operation, 34, 170, 243, 291, 339
- accessories, 341
- Conditions, 342
- DC bus, 339
- DC-voltage level, 339
- Disconnecting the EMC filters from PE, 109, 207, 324
- Multi-axis controllers, 339
- Power supply module, 339
- Regenerative power supply module, 339
- Several drives, 339
- Single-axis controllers, 339

Definition of notes used, 19

Definitions, Terms, 22, 339

Device features, 31, 167, 241, 289

Device protection, 30, 97, 148, 200, 222, 272, 285, 320, 332, 370, 412

DeviceNet, 392

Dimensions, 268, 314, 488, 500, 512, 521, 539, 546, 553, 561, 568, 575, 581, 586, 593, 600, 608, 614, 626, 630

E

Electrical installation, wiring of control connections, 332

Electrical isolation, 450

EMC filter, Isolate from PE, 109, 207, 324

Emergency operation, 42, 174

EN 61000-3-2, 39, 172

Ethernet, 374

Ethernet cable specifications, 373

Ethernet interface, 373

EtherNet/IP, 387

External voltage supply, 379, 383, 386, 401, 404

F

Free space, 538, 545, 552, 560, 567, 574, 580, 585, 592

Function modules, 412

Fuses, operation with rated power, 400 V (UL), 62, 64, 253, 302

G

General accessories, 616

General data, 33, 169, 242, 290, 537, 544, 551, 559, 566, 573, 579, 584, 591, 599, 607, 613, 623, 625, 629

H

Harmonic currents, limitation according to EN 61000-3-2, 39, 172

I

Identification, 374, 376, 381, 384, 387, 392, 398, 403, 406, 409, 414, 422, 423, 424, 425, 426, 428, 455, 460, 466, 473, 480, 485, 491, 497, 502, 504, 516, 537, 544, 551, 559, 566, 573, 584, 591, 598, 606, 612, 622, 624, 628

Increased continuous power, 58

increased continuous power, 52

Information on nameplate, 409

Installation
- mechanical, 90, 194, 262, 313
- mounting, 371, 413, 419, 429
- standard device, 217

INTERBUS, 409

IT system, Disconnecting the EMC filters from PE, 109, 207, 324

L

Labelling, controller, 20

Legal regulations, 20

Liability, 21

M

Mains current
- with external mains choke, 46, 49, 50, 55, 56
- with/without mains choke, 46, 49, 50, 55, 56

Mains filter, 312, 316

Manufacturer, 20

Mechanical installation, 90, 194, 262, 313

Memory modules, 418

Module status displays, 388

Monitoring functions, 449

Motor cable
- capacitance per unit length, 35, 171
- requirements, 35, 171

Motor holding brakes, Control module
- E94AZHA0051, 460
- E94AZHB0101, 473
- E94AZHN0025, 485
- E94AZHN0026, 497
- E94AZHX0051, 455
- E94AZHY0025, 480
- E94AZHY0026, 491
- E94AZHY0101, 466

Motor power, typical, 46, 49, 50, 55, 56

Motor protection, 30

Motors, suitable, 20

Mounting, 371, 413, 419, 429

Mounting conditions
- Free space, 538, 545, 552, 560, 567, 574, 585, 592
- free space, 580, 599, 607, 613
- mounting clearances, 498
- Mounting place, 538, 545, 552, 560, 567, 574, 585, 592
- mounting place, 580, 599, 607, 613
- Mounting position, 538, 545, 552, 560, 567, 574, 580, 585, 592
- mounting position, 498, 599, 607, 613

Mounting place, 538, 545, 552, 560, 567, 574, 580, 585, 592

Mounting position, 538, 545, 552, 560, 567, 574, 580, 585, 592

Mounting positions, 34, 170, 243, 291

N

Nameplate, 428

Nameplate data, 374, 376, 381, 384, 387, 392, 398, 403, 406, 422, 423, 424, 425, 426, 428, 455, 460, 466, 473, 480, 485, 491, 497, 502, 516, 537, 544, 551, 559, 566, 573, 584, 591, 598, 606, 612, 622, 624, 628

Nameplate information, 414, 504

Network of several drives, Basic dimensioning, 354

Noise emission, 39, 172

Noise immunity, 39, 172, 242, 290

Notes, definition, 19

O

Operating conditions, 35, 170, 244, 449, 518, 598, 606, 612, 621
- Mounting conditions
  Free space, 538, 545, 552, 560, 567, 574, 585, 592
  Mounting place, 538, 545, 552, 560, 567, 574, 585, 592
  Mounting position, 538, 545, 552, 560, 567, 574, 580, 585, 592
- mounting conditions
  free space, 580, 599, 607, 613
  mounting clearances, 498
  mounting place, 580, 599, 607, 613
  mounting position, 498, 599, 607, 613

Operation with emergency voltage supply, 42, 174

Operation with filters, Disconnecting the EMC filters from PE, 109, 207, 324

Operation with increased continuous power, 52, 58

Operation with power supply module, Disconnecting the EMC filters from PE, 109, 207, 324

Output power, 46, 49, 50, 55, 56

output voltage, reduced, 44

output voltage , 44

Overspeeds, 30

Overview
- Accessories, 365
- devices, 32, 168

P

Possible device module combinations, 372

Power regeneration
- Energy characteristics, 301
- Limit range, 300, 301
- Power characteristics, 300

POWERLINK, 376

POWERLINK Slave, 381

Product range, description, 10

Protection against accidental contact, 450

Protection of persons, 30
- Electrical isolation, 450
- Protection against accidental contact, 450

Protective insulation, 39, 172

R

Rated data, 416, 456, 462, 467, 475, 481, 487, 493, 499, 503, 505, 518, 538, 545, 552, 560, 567, 574, 581, 585, 592, 600, 608, 614, 623, 625, 629

Requirements, motor cable, 35, 171

Residual hazards, 30

S

Safety address, 442

Safety instructions, 24
- definition, 19
- layout, 19

Safety modules, 427

Shield mounting, 616
- Alternative, 618

Shield mountings
- Accessories, 617
- Assignment, 617
- Clamping range, 618
- Scope of supply, 617

Signalling, 408

Specification of the transmission cable, 402, 407

Standard device, installation, 217

Standards, 456, 461, 467, 474, 481, 486, 492, 498, 517, 635

Status displays (CIP), 389

Status displays (module), 388

Status displays at the RJ45 sockets, 391

Sub-D plug connector, connections, 407

Sub-D socket, connections, 400

System description, 10

System overview, 10, 447

T

Technical data
- features, 167
- General data, 33, 169, 242, 290, 537, 544, 551, 559, 566, 573, 579, 584, 591, 599, 607, 613, 623, 625, 629
- Operating conditions, 35, 170, 244, 449, 518, 598, 606, 612, 621
- standards, 456, 461, 467, 474, 481, 486, 492, 498, 517, 635

Terminal data, 386, 397, 401, 405, 459, 465, 472, 479, 484, 490, 496, 501, 524, 603, 609, 615, 633

Terms
- controller, 22
- Definitions, 339
- definitions, 22
- drive, 22

Thermal contact, 623, 625, 629

Transmission cable, specification, 402, 407

Type code, 374, 376, 381, 384, 387, 392, 398, 403, 406, 409, 422, 423, 424, 425, 426, 428, 455, 460, 466, 473, 480, 485, 491, 497, 502, 504, 516, 537, 544, 551, 559, 566, 573, 584, 591, 598, 606, 612, 622, 624, 628

Types codes, 414

V

Voltage supply: external, 379, 383, 386, 401, 404

W

Warranty, 21

Waste disposal, 26

Wiring of control connections, 332

© 06/2018

Lenze Automation GmbH
Postfach 10 13 52, 31763 Hameln
Hans-Lenze-Str. 1, 31855 Aerzen
GERMANY
HR Hannover B 205381

+49 5154 82-0

+49 5154 82-2800

lenze@lenze.com

www.lenze.com

Service Lenze Service GmbH
Breslauer Straße 3, 32699 Extertal

GERMANY

008000 2446877 (24 h helpline)

+49 5154 82-1112

service@lenze.com

EDS94SPP101 ■ 13550890 ■ EN ■ 11.0 ■ TD29

10 9 8 7 6 5 4 3 2 1