SEW EURODRIVE

Product manual



Control cabinet inverters

MOVITRAC® advanced

Edition 05/2026

33955948/EN



Table of contents

1 General information 8
1.1 Structure of the safety notes 8
1.2 Decimal separator in numerical values 9
1.3 Rights to claim under limited warranty 9
1.4 Recycling, reprocessing, reuse 9
1.5 Product names and trademarks 9
1.6 Copyright notice 9

2 Safety notes 10
2.1 Preliminary information 10
2.2 Duties of the user 10
2.3 Target group 11
2.4 IT security 11
2.5 Designated use 14
2.6 Transport 17
2.7 Creating a safe working environment 19
2.8 Installation/assembly 22
2.9 Protective separation 22
2.10 Electrical installation 22
2.11 Startup/operation 23

3 Product description 24
3.1 MOVI-C® modular automation system 24
3.2 MOVITRAC® advanced 25
3.3 MOVI-C® CONTROLLER 28
3.4 Technologies 30
3.5 Setpoint processing 34
3.6 Control topologies 36
3.7 Motor control 41
3.8 Technology functions 43

4 Technical data 44
4.1 Markings 44
4.2 General technical data 48
4.3 Environmental conditions 49
4.4 Technical data of the MCX91A.. basic device 3 × AC 380 – 500 V 51
4.5 Technical data of the MCX91A.. basic device 3 × AC 200 – 240 V 57
4.6 Technical data of the MCX91A.. basic device 1 × AC 200 – 240 V 61
4.7 Electronics data 63
4.8 CFE fieldbus interface for EtherNet/IP™ and Modbus TCP 66
4.9 CFN fieldbus interface for PROFINET 67
4.10 CFL fieldbus interface for POWERLINK 68
4.11 Communication interface EtherCAT®/SBus^{PLUS} 69
4.12 EtherCAT®/CiA402 communication interface 70
4.13 Safety options CSO/CSB/CSL/CSS 71
4.14 Technical data – functional safety 73

33955948/EN – 05/2026

4.15 CMM11A memory module ... 76
4.16 CDM11A diagnostic module ... 78
4.17 CBG01A keypad ... 79
4.18 CBG11A keypad ... 80
4.19 CBG21A keypad ... 81
4.20 CBG22A local keypad ... 83
4.21 COG11A door mounting frame ... 84
4.22 USM21A interface adapter ... 86
4.23 CLH21A shield plate extension ... 87
4.24 CLH31A and CLH41A support plates with braking resistors ... 88
4.25 CLH51A and CLH61A support plates for mounting rail installation ... 89
4.26 BW../BW..-T braking resistors ... 89
4.27 NF.. line filter ... 106
4.28 ND.. line choke ... 110
4.29 HF.. output filter ... 114
4.30 HD.. output choke ... 115
4.31 ZD.. DC link choke ... 118
4.32 Standard accessories ... 121
4.33 Connectors ... 122
4.34 Ports and services ... 123
4.35 Dimension drawings ... 124

5 Project planning ... 132
5.1 SEW-Workbench ... 132
5.2 Schematic workflow for project planning ... 133
5.3 Control mode ... 134
5.4 FCB concept ... 140
5.5 Drive selection ... 148
5.6 Recommendations for motor and inverter selection ... 155
5.7 Motor/inverter characteristic curves ... 159
5.8 Inverter selection ... 159
5.9 Braking resistor selection ... 169
5.10 EMC-compliant installation according to EN 61800-3 ... 173
5.11 Supply system cables and motor cables ... 175
5.12 Line components ... 178
5.13 Components on the output side ... 180
5.14 24 V supply voltage selection ... 182
5.15 Energy-saving functions ... 184
5.16 UL-compliant installation ... 185

6 Project planning for functional safety ... 190
6.1 Definitions ... 190
6.2 Underlying standards ... 190
6.3 Integrated safety technology ... 190
6.4 Safety requirements ... 206
6.5 Safe digital inputs (F-DI.) ... 216
6.6 Safe digital output (F-DO00) ... 219

3955948/EN – 05/2026

6.7 Data exchange with higher-level controller ... 223
6.8 Response times ... 247

7 Prefabricated cables ... 255
7.1 Meaning of the symbols ... 255
7.2 Power cables ... 255
7.3 Encoder cable ... 257
7.4 Cables for MOVILINK® DDI ... 262
7.5 System bus cables ... 274

8 Device structure ... 276
8.1 Inverter ... 276
8.2 Nameplates ... 291
8.3 Type designation ... 293

9 Mechanical installation ... 295
9.1 Installation notes ... 295
9.2 Installation requirements ... 295
9.3 Minimum clearance and mounting position ... 295
9.4 Preparing the control cabinet back panel ... 296
9.5 Installing inverter sizes 0S and 0L ... 297
9.6 Installing inverter sizes 3 – 8 ... 298
9.7 Installing the shield plate ... 299
9.8 Removing and attaching the safety cover ... 302
9.9 Removing and reinstalling the touch guards ... 304
9.10 Installing braking resistors ... 308
9.11 Installing line choke ... 313
9.12 Installing the line filter ... 314
9.13 Mounting the output filter ... 315
9.14 Mounting the output choke ... 316
9.15 Mounting the keypad ... 317
9.16 Mounting the COG11A door mounting frame ... 318
9.17 Mounting the keypad in the COG11A door mounting frame ... 320

10 Electrical installation ... 321
10.1 Installation planning considering EMC aspects ... 321
10.2 Installation instructions ... 325
10.3 Connection to power terminals ... 332
10.4 24 V supply voltage ... 334
10.5 Brake chopper output ... 336
10.6 Temperature evaluation ... 336
10.7 Brake control output ... 336
10.8 Inputs/outputs ... 337
10.9 Encoders ... 337
10.10 MOVILINK® DDI ... 339
10.11 Fieldbus cables and cable routing ... 343
10.12 BW.. braking resistors ... 345
10.13 ND.. line choke ... 349

33955948/EN – 05/2026

10.14 NF.. line filter ... 349
10.15 Terminal assignment ... 349
10.16 Electrical installation – functional safety ... 354
10.17 Wiring diagrams ... 369
10.18 PC connection ... 386

11 Startup ... 390
11.1 Startup information ... 390
11.2 Startup requirements ... 393
11.3 Delivery state ... 393
11.4 Operation without motor startup ... 394
11.5 Configuration for terminal mode ... 394
11.6 Configuration for MOVIKIT® Velocity Drive ... 395
11.7 Configuration for parameters ex works ... 395
11.8 Setting the EtherCAT® ID ... 396
11.9 Startup with MOVISUITE® engineering software ... 397
11.10 Startup with the CBG01A keypad ... 397
11.11 Startup with the CBG11A keypad ... 402
11.12 Startup with the CBG21A keypad ... 403
11.13 Startup of third-party motors ... 406
11.14 Startup of motors with the MOVILINK® DDI interface ... 407
11.15 Control options ... 408
11.16 Application-related startup ... 408
11.17 Startup of the MOVISAFE® CS..A safety option ... 419

12 Operation ... 473
12.1 Manual mode with the CBG01A, CBG11A and CBG21A keypads ... 473
12.2 Manual mode with the CBG22A local keypad ... 473
12.3 Operation - Functional safety ... 473
12.4 IT security ... 475

13 Service ... 476
13.1 Evaluating fault messages ... 476
13.2 Resetting fault messages ... 476
13.3 Error responses ... 477
13.4 Error messages with parameterizable response ... 477
13.5 Responses to error acknowledgement ... 480
13.6 Status and operating displays of the 7-segment display ... 481
13.7 Status and operating displays of the LEDs ... 484
13.8 Fault description for basic device ... 494
13.9 Error description for CS..A safety option ... 571
13.10 Device replacement ... 698
13.11 Service – functional safety ... 700
13.12 SEW-EURODRIVE Service ... 711
13.13 Shutdown ... 711
13.14 Extended storage ... 712
13.15 IT security guidelines for secure disposal ... 712
13.16 Waste disposal ... 714

33955948/EN – 05/2026

14 Inspection and maintenance 715

15 Appendix 716

15.1 Abbreviation key 716

16 Contacting SEW-EURODRIVE 718

Index 719

33955948/EN – 05/2026

1 General information

1.1 Structure of the safety notes

1.1.1 Meaning of signal words

The following table shows the graduation and meaning of the signal words in the safety notes.

Signal word	Meaning	Consequences if not observed
⚠ **DANGER**	Imminent danger	Death or severe injuries
⚠ **WARNING**	Possibly dangerous situation	Death or severe injuries
⚠ **CAUTION**	Possibly dangerous situation	Minor injuries
NOTICE	Possible damage to property	Damage to the product or its environment

1.1.2 Meaning of the hazard symbols

The hazard symbols in the safety notes have the following meaning:

Hazard symbol	Meaning
	General hazard
	Warning of dangerous electrical voltage
	Warning of hot surfaces
	Warning of automatic startup

1.1.3 Structure of section-related safety notes

Section-related safety notes do not apply to a specific action but to several actions pertaining to one subject. The hazard symbols used either indicate a general hazard or a specific hazard.

This is the formal structure of a safety note for a specific section:



SIGNAL WORD

Type and source of hazard.

Possible consequence(s) if disregarded.

- Measure(s) to prevent the hazard.

33955948/EN – 05/2026

1.1.4 Structure of embedded safety notes

Embedded safety notes are directly integrated into the instructions just before the description of the dangerous step.

This is the formal structure of an embedded safety note:

⚠ **SIGNAL WORD!** Type and source of danger. Possible consequence(s) if disregarded. Measure(s) to prevent danger.

1.2 Decimal separator in numerical values

In this document, a period is used to indicate the decimal separator.

Example: 30.5 kg

1.3 Rights to claim under limited warranty

Read the information in this documentation. This is essential for fault-free operation and fulfillment of any rights to claim under limited warranty. Read the documentation before you start working with the product.

1.4 Recycling, reprocessing, reuse

When manufacturing products, SEW-EURODRIVE makes sure to keep the use of new natural resources to a minimum in the interests of the circular economy. Key aspects here are the recycling of materials as well as the inspection and/or processing of returned components and their reuse in new products. These processes are only used at SEW-EURODRIVE if the resulting materials and components correspond to the quality of new products.

1.5 Product names and trademarks

The product names mentioned in this documentation are trademarks or registered trademarks of the respective titleholders.

1.6 Copyright notice

© 2026 SEW-EURODRIVE. All rights reserved. Copyright law prohibits the unauthorized reproduction, modification, distribution, and use of this document – in whole or in part.

33955948/EN – 05/2026

2 Safety notes

2.1 Preliminary information

The following general safety notes serve the purpose of preventing injury to persons and damage to property. They primarily apply to the use of products described in this documentation. If you use additional components, also observe the relevant warning and safety notes.

2.2 Duties of the user

As the user, you must ensure that the basic safety notes are observed and complied with. Make sure that persons responsible for the machinery and its operation as well as persons who work on the device independently have read through the documentation carefully and understood it.

As the user, you must ensure that all of the work listed in the following is carried out only by qualified specialists:

- Setup and installation
- Installation and connection
- Startup
- Maintenance and repairs
- Shutdown
- Disassembly

Ensure that the persons who work on the product pay attention to the following regulations, conditions, documentation, and information:

- The national and regional regulations governing safety and the prevention of accidents
- Product safety label on the product
- All other associated project planning documents, installation and startup instructions, as well as connection and wiring diagrams
- Do not assemble, install, or operate damaged products
- All system-specific specifications and regulations

Ensure that systems in which the product is installed are equipped with additional monitoring and protection devices. Observe the applicable safety regulations and legislation governing technical work equipment and accident prevention regulations.

33955948/EN – 05/2026

2.3 Target group

Specialist for mechanical work

All mechanical work must only be carried out by qualified specialists with appropriate training. Specialists in the context of this documentation are persons who are familiar with the design, mechanical installation, troubleshooting, and maintenance of the product, and who possess the following qualifications:

- Qualifications in the field of mechanics in accordance with the national regulations
- Familiarity with this documentation

Specialist for electrical work

All electrical work must only be carried out by electrically skilled persons with appropriate training. An electrically skilled person in the context of this documentation is someone who is familiar with the electrical installation, startup, troubleshooting, and maintenance of the product, and who possesses the following qualifications:

- Qualification in the field of electrical engineering in accordance with the national regulations
- Knowledge of this documentation

Additional qualifications

In addition to that, these persons must be familiar with the valid safety regulations and laws, as well as with the requirements of the standards, directives, and laws specified in this documentation.

The persons must have the express authorization of the company to operate, program, parameterize, label, and ground devices, systems, and circuits in accordance with the standards of safety technology.

Any work affecting cybersecurity should be carried out by people with basic knowledge of IT topics, especially when dealing with digital tools and network structures. A basic understanding of IT and OT security as well as knowledge of the relevant regulations are required.

Instructed persons

All work in the areas of transport, storage, installation, operation and waste disposal must only be carried out by persons who are trained and instructed appropriately. These instructions must enable the persons to carry out the required activities and work steps safely and in accordance with regulations.

2.4 IT security

2.4.1 Contact



SEW-EURODRIVE offers the following communication channels for IT security:

- Report incidents regarding cybersecurity by e-mail to cert@sew-eurodrive.com or via the contact form on the Product Security Management website (http://go.sew/psm).
- Security advisories can be found in the SEW-EURODRIVE Online Support.
  - For automatic updates on new and changed security advisories, subscribe to the newsletter on the Product Security Management page (http://go.sew/psm).
- If you need support with the configuration, contact SEW-EURODRIVE Service.

2.4.2 IT security of the product



The IT security of the product is only guaranteed when used in an environment secured by defense-in-depth strategies.

Further information, e.g. regarding additional organizational measures to meet regulatory requirements, refer to "IT security in the context of regulatory requirements" (→ 🗎 13).

33955948/EN – 05/2026

Potential hazards

Access points for manipulations

The device has interfaces that allow remote access to safety and non-safety functions. In this context, "remote access" means that access is made available directly or indirectly via the local communication interfaces of the device with a software function beyond the physical limits of machine, inverter, and brake. These interfaces allow all parameters to be changed without a safety protocol.

Potential hazards

Potential hazards posed by unauthorized individuals with remote access to the software functions include:

- Manipulation of the speed, resulting in accelerations and decelerations.
- Unintended actuation of the power section, resulting in hazardous movement at the motor shaft.
- Unintended actuation of the brake (brake release), resulting in hazardous movement at the motor shaft.
- Excessive heating of the device and motor, resulting in thermal destruction.
- Manipulation of the safety configuration, resulting in hazardous movement at the motor shaft.
- Manipulation of the motor startup parameters configured in the inverter, resulting in unintended movement at the motor shaft.
- Manipulation of the limit values and digital input settings configured in the inverter (application limits, reference cams), resulting in unintended movement at the motor shaft.
- Manipulation of the encoder configuration of the motor and distance encoder, which may lead to unintended travel behavior or malfunction (e.g., encoder offset).
- Manipulation of the fieldbus interface, which may lead to malfunction.
- Manipulation of the software on the device, which may lead to unintended movement.
- Downgrading of the firmware to an earlier version, which may lead to unintended movement and malfunction.

Technically excluded hazards

The following hazards due to remote access by an unauthorized person are technically excluded:

- Danger due to electric shock due to corruption of general electrical safety, e.g. the separation between high and extra-low voltage.

2.4.3 IT security of the environment



For drive and control components that are integrated in a network (e.g. fieldbus, Wi-Fi, or Ethernet network), settings can even be made from more remote locations. This entails the danger of a parameter change that is not visible externally resulting in unexpected, but not uncontrolled system behavior, which in turn may impact negatively on operational safety and reliability, system availability, or data security.

Observe the following:

- The IT security of the product is only guaranteed when used in an environment secured by defense-in-depth strategies.
- Particularly in networked systems based on Wi-Fi or Ethernet and at engineering interfaces, ensure that unauthorized access is prevented. Using IT-specific security standards, such as network segmentation, adds to the security of the ports.

3955948/EN – 05/2026

  - For information on the communication interfaces of the device, refer to this documentation.
  - In particular, refer to chapter "Ports and services" (→ 🗎 123) regarding the provided services of the communication interfaces.
- Ensure that clear responsibility for security is guaranteed during operation. SEW-EURODRIVE recommends an IT security management system in accordance with ISO/IEC 27001 and ISO/IEC 62443-2-4.

2.4.4 IT security in the context of regulatory requirements



Below you will find information on adhering to cybersecurity requirements with regard to various regulations.

EU Machinery Regulation

The EU Machinery Regulation (Regulation 2023/1230, "MR") sets special requirements on safety components and machines to protect them from corruption.

The described device integrates safety components that can be used to reduce hazards in machines.

Certain variants of the device are equipped with integrated safety options. In these device variants, safety functions are implemented, for example, through software. Therefore, the requirements for protection against compromise within the machine must be observed for both the device's non-safety-related functions and its safety functions.

If your device variant is not equipped with these integrated safety options, the safety components are implemented exclusively in electronic form and cannot be compromised in their functionality by software.

Observe the following:

- Perform a risk assessment and risk minimization of the machine according to ISO 12100.
- Implement suitable technical and organizational measures to prevent unauthorized access to safety-relevant and non-safety-relevant functions, if their manipulation can lead to a hazard according to the risk assessment (see "Potential hazards" (→ 🗎 12)).

Strictly observe the following documentation:

- Manual "Cybersecurity for inverters of the MOVI-C® modular automation system – Firmware < V20.00"

Note that additional firmware-specific versions of the referenced documentation will be published in the future. The respective assignment can be identified from the document title.

Protection of the STO control

If you are using a device variant without integrated safety options, the STO safety function is implemented exclusively in electronic form, without the use of software. In this case, the device's software functions have no effect on the STO safety function. A potential attacker has no means of compromising the safety functions by manipulating software or data transmitted to the device.

Observe the following:

- Secure the machine and its components that control the STO safety function against potential compromise.

33955948/EN – 05/2026

EU Data Act

The product offers "Access by Design" for all data generated by the product and thus meets the requirements of the EU Data Act (Regulation 2023/2854):

Storing data
- Data in the product is stored until it is actively deleted or overwritten.
- Log and scope data is automatically overwritten in the designated ring buffers as soon as they are full.
- Scope data is only stored in the device-internal RAM and is deleted after the device is restarted.

Accessing data
- All data can be read from the product using freely available engineering software from SEW-EURODRIVE or via local interfaces or network connections. Corresponding HMI systems and external controllers can also access the data of the product.

Deleting data
- For information on deleting data, refer to "IT security guidelines for secure disposal" (→ 🗎 712).

Data transmission
- In delivery state, the product does not automatically transfer data to devices in it's environment. Depending on the firmware version, you can configure an independent data transmission.

Quality of service
- The device has different qualities of service for data communication:
  - Cyclic communication to control the device. A few bytes are transferred real-time capably and cyclically.
  - Acyclic access to all idle data stored on the device.
- The response time depends on the communication interface used.
- The cycle time is determined by the controlling or requesting device, and is usually between 1 ms and 100 ms.

For information regarding the data generated by the product, stored internally and transferred to other devices in the environment, as well as regarding deletion of data, refer to "IT security guidelines for secure disposal" (→ 🗎 712).

For more information on the EU Data Act, refer to the following documentation:

- Manual "Cybersecurity for inverters of the MOVI-C® modular automation system – Applies to firmware versions prior to V20.00"

Note that additional firmware-specific versions of the referenced documentation will be published in the future. The respective assignment can be identified from the document title.

2.5 Designated use

The product is intended for control cabinet installation in electrical systems or machines.

In case of installation in electrical systems or machines, startup of the product is prohibited until it is determined that the machine meets the requirements stipulated in the local laws and directives. For Europe, Machinery Directive 2006/42/EC as well as the EMC Directive 2014/30/EU apply. Observe EN 60204-1 (Safety of machinery - electrical equipment of machines). The product meets the requirements stipulated in the Low Voltage Directive 2014/35/EU.

The standards given in the declaration of conformity apply to the product.

The systems can be mobile or stationary.

Only connect ohmic/inductive loads.

33955948/EN – 05/2026

The product can be used to operate the following motors in industrial and commercial systems:

- AC asynchronous motors
- AC synchronous motors

Technical data and information on the connection conditions are provided on the nameplate and in chapter "Technical data" in the documentation. Always comply with the data and conditions.

Unintended or improper use of the product may result in severe injury to persons and damage to property.

33955948/EN – 05/2026

2.5.1 Designated use of the MOVISAFE® CS..A safety option

The MOVISAFE® CS..A safety option is a parameterizable safety controller that can be used to realize safety shutdowns and safety functions. The product is intended for use:

- In emergency stop devices
- As a safety-related component pursuant to Machinery Directive 2006/42/EC
- As a PE system for risk reduction pursuant to EN 61508
- In safety circuits according to EN 60204-1
- As a PE system for functional safety pursuant to EN 62061
- As a SRP/CS pursuant to EN ISO 13849
- As a device for implementing the safety functions according to EN 61800-5-2

2.5.2 Restrictions under the European WEEE Directive 2012/19/EU

Options and accessories from SEW-EURODRIVE may only be used in combination with products from SEW-EURODRIVE.

2.5.3 Lifting applications

To avoid danger of fatal injury due to falling hoists, observe the following points when using the product in lifting applications:

- Use mechanical protection devices.

2.5.4 Restrictions of use

The following applications are prohibited unless the device is explicitly designed for such use:

- Use in potentially explosive areas
- Use in areas exposed to harmful oils, acids, gases, vapors, dust, and radiation
- Operation in applications with impermissibly high mechanical vibration and shock loads in excess of the regulations stipulated in EN 61800-5-1.
- Use at an elevation of more than 3800 m above sea level.

In addition, observe the restrictions of use in the **product manual** > chapter "Technical data" > "General technical data" (→ 🗎 48).

33955948/EN – 05/2026

2.6 Transport

Inspect the shipment for damage as soon as you receive the delivery. Inform the shipping company immediately about any damage. If the product or the packaging is damaged, do not assemble, install, connect, or start up the product. If the packaging is damaged, the product itself may also be damaged.

Observe the following notes when transporting the device:

- Ensure that the product is not subject to mechanical impact.
- Only place the product lying on the heat sink during transport.
- Always use all attachment points if available. The attachment points are designed to carry only the mass of the product. Do not apply any additional loads.

If necessary, use suitable, adequately dimensioned transport aids.

Observe the notes on the climatic conditions in accordance with chapter "Technical data" in the corresponding product manual.

2.6.1 Transport information - size 5

Observe the following information:

- Hold inverters of size 5 by the handling points provided on the rear panel of the housing.

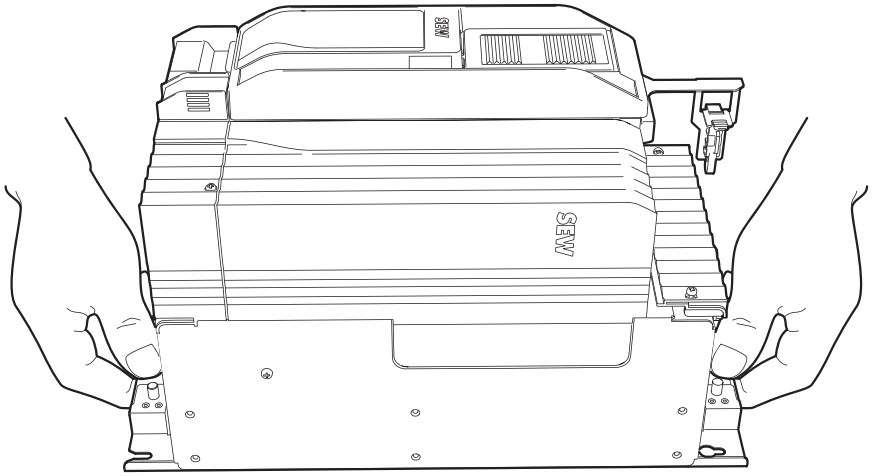

21435628299

33955948/EN – 05/2026

2.6.2 Transport information - size 6

Observe the following information:

- Hook in the lifting eye at the top of the housing.
- Attach the lifting eye to lifting devices using suitable slings.

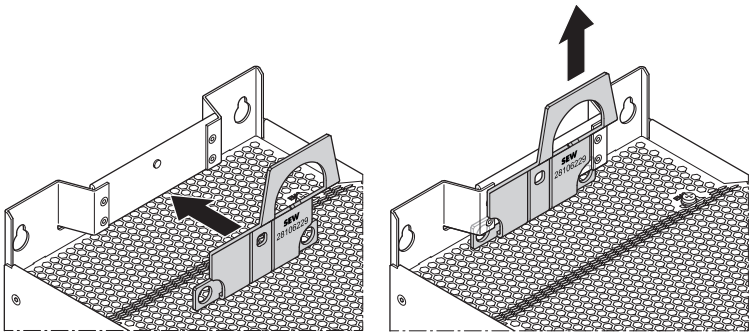

24550948491

2.6.3 Transport information - size 7

Observe the following information:

- Transport the inverter using the carrying bar [1] included in the scope of delivery.
- Secure the carrying bar against axial displacement using both split pins [2].

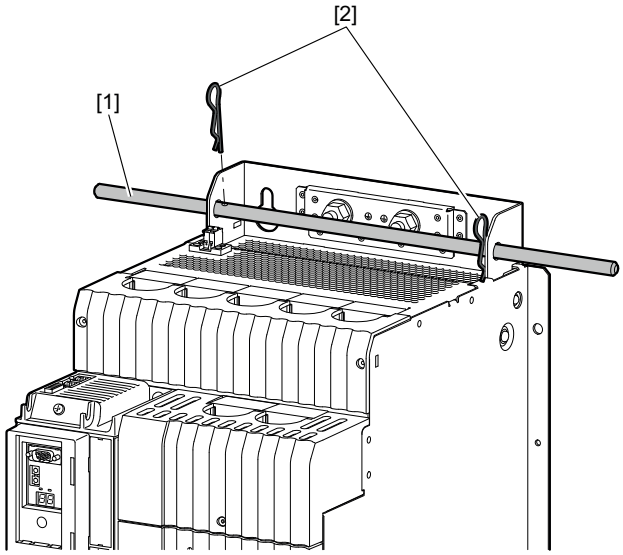

35809245451

33955948/EN – 05/2026

2.6.4 Transport information - size 8

Observe the following information:

- Only transport size 8 inverters lying on their rear panel on the transport pallet.
- Only set up size 8 inverters from the transport pallet using a suitable lifting device. Use the recesses [1] provided on the housing for this purpose.
- Only place size 8 inverters on the transport pallet lying on their rear panel.

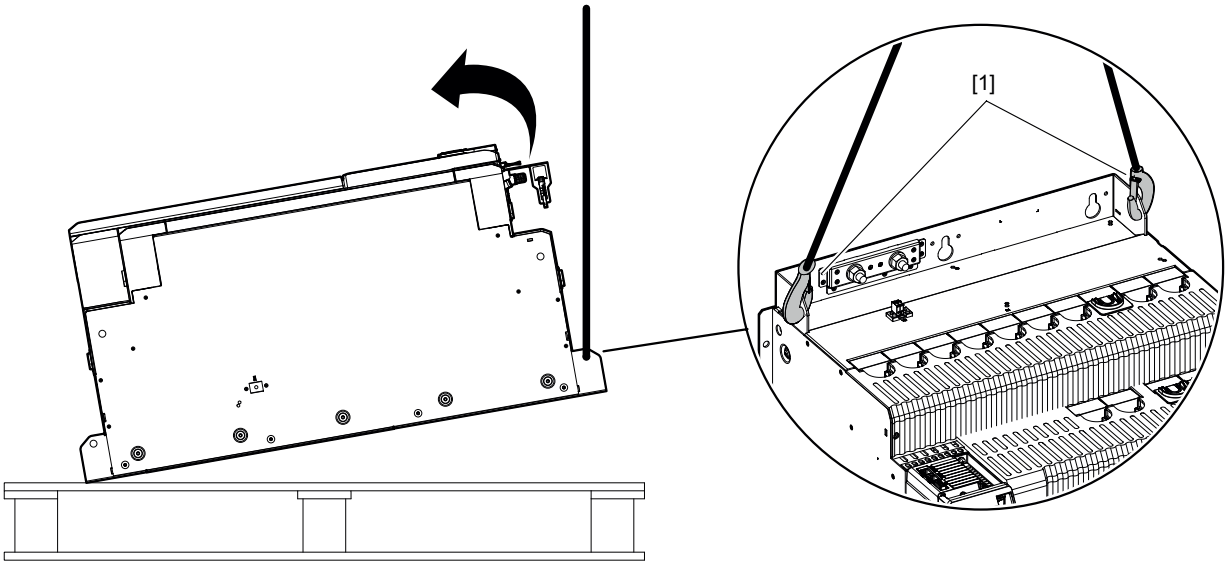

9007238288236555

2.7 Creating a safe working environment

Before you work on the product, ensure a safe working environment. Observe the following basic safety notes:

2.7.1 Performing work on the product safely

Defective or damaged product

Never install defective or damaged products. Observe the following information to avoid injuries or damage:

- Before installation, check the product for external damage and replace a damaged product.

Hot surfaces

The surfaces of the product can become very hot during operation. Observe the following information to avoid burns:

- Let the product and its accessories cool down before touching it.
- Do not touch any surfaces of the product during operation, except for the control elements.
- Also observe the labels and hazard symbols on the product.

33955948/EN – 05/2026

Falling load

Observe the following information to avoid death or severe injury due to falling loads:

- Do not stand under the load.
- Secure the area where loads can fall down.
- Use personal protective equipment (such as helmet and safety shoes).
- Use a suitable lifting tool (chain hoist, forklift) and transport protection.

Rotating parts

When working on the product, there may be a risk of exposed rotating parts and uncontrolled movement of the components. Observe the following information to avoid body parts getting crushed or pulled in:

- Switch off the product before you start working on it.
- Observe all technical data of the product.
- Do not reach into the hazard zone.
- Follow the 5 safety rules in chapter: "Performing electrical work safely" (→ 🗎 20).

Sharp edges

Observe the following information to avoid cuts caused by sharp or non-deburred cutting edges:

- Wear safety gloves.

2.7.2 Performing electrical work safely

Observe the following information to perform electrical work safely:

Electrical work may only be performed by an electrically skilled person or an electronically instructed person under the supervision of an electrically skilled person.

The fact that the operation or display elements are no longer illuminated does not indicate that the product has been disconnected from the supply system and no longer carries any voltage.

Live parts

Always adhere to the 5 safety rules for all work on electrical components:

1. Disconnect.
2. Secure the device against a restart.
3. Check that no voltage is applied.
4. Ground and short-circuit.
5. Cover or isolate neighboring live parts.

Depending on the situation, it is possible to deviate from rules 4 and 5. Observe standard EN 50110-1.

Dangerous voltage

When the system is switched on, dangerous voltages are present at all power connections as well as any cables and terminals that are connected. This is also the case even if the product is inhibited. Observe the following information to avoid the risk of electric shock:

- Do not touch any exposed live parts (e.g. male contacts, connectors, terminals).

3955948/EN – 05/2026

- Secure all open live components with a touch guard.
- Before applying the supply voltage, make sure that all of the required covers are mounted.

Danger due to electric arc

An electric arc may occur when plug-in connections are disconnected or connected while voltage is applied (e.g. connection between drive and inverter). In order to avoid damaging electrical components, observe the following information:

- Do not disconnect power connections during operation.
- Do not connect power connections during operation.
- Ensure that the product is de-energized before disconnecting and connecting the plug-in connections.

Damage to property due to damaged or loose cables

To avoid damaging electrical components (e.g. cables and plug-in connections), observe the following information:

- Do not insert plug-in connections if cables are subjected to tensile stress.
- Do not kink cables when connecting plug-in connections.
- Replace loose or defective plug-in connections.
- Make sure that cables are not pinched or crushed.
- Do not run cables near or along a sharp edge.

Dangerous voltage due to charged capacitors

Voltage from charged capacitors can still be present in live components or power connections after disconnecting from the supply voltage. Observe the following information:

- Observe the following waiting period after disconnecting the supply voltage and before performing any electrical work: **10 minutes**.
- Ensure that the unit is de-energized.
- Also observe the labels and hazard symbols on the product.

33955948/EN – 05/2026

2.8 Installation/assembly

Ensure that the product is installed and cooled in accordance with the regulations in the documentation.

Protect the product from excessive mechanical strain. The product and its mounted components must not protrude into the path of persons or vehicles. Ensure that no components are deformed or no insulation spaces are modified, particularly during transportation. Electrical components must not be mechanically damaged or destroyed.

2.9 Protective separation

The product meets all requirements for protective separation of power and electronics connections in accordance with IEC 61800-5-1. The connected signal circuits must meet requirements according to SELV (**S**afety **E**xtra **L**ow **V**oltage) or PELV (**P**rotective **E**xtra **L**ow **V**oltage) to ensure protective separation. The installation must meet the requirements for protective separation.

In order to avoid exceeding the permitted contact voltages in SELV or PELV power circuits in the event of an an error, continuous equipotential bonding is required in the vicinity of these power circuits. If this is not possible, other protective measures must be taken. These protective measures are described in IEC 61800-5-1.

2.10 Electrical installation

Ensure that all of the required covers are correctly attached after the electrical installation.

Make sure that preventive measures and protection devices comply with the applicable regulations (e.g. EN 60204-1 or EN 61800-5-1).

2.10.1 Stationary application

The necessary preventive measure for the product is:

Type of energy transfer	Preventive measure
Direct power supply	Ground connection

2.10.2 Regenerative operation

The drive is operated as a generator due to the kinetic energy of the system/machine. Before opening the connection box, secure the output shaft against rotation.

33955948/EN – 05/2026

2.11 Startup/operation

Make sure the connection boxes are closed and screwed before connecting the supply voltage.

Depending on the degree of protection, products may have live, uninsulated, and sometimes moving or rotating parts as well as hot surfaces during operation.

Additional protective measures may be required for applications with increased hazard potential. Be sure to check the effectiveness of the protection devices after every modification.

In the event of deviations from normal operation, switch off the product. Possible deviations are increased temperatures, noise, or vibration, for example. Determine the cause. Contact SEW-EURODRIVE if necessary.

Risk of burns due to arcing: Do not disconnect power connections during operation. Do not connect power connections during operation.

When the system is switched on, dangerous voltages are present on all voltage-controlled product parts as well as any cables and terminals that are connected. This also applies even when the product is inhibited and the motor is in an idle state. Do not touch the components during operation.

If you disconnect the product from the voltage supply, do not touch any live components or power connections because capacitors might still be charged. Observe the following minimum switch-off time:

10 minutes.

Observe the corresponding information signs on the product.

The fact that the operation or display elements are no longer illuminated does not indicate that the product has been disconnected from the supply system and no longer carries any voltage.

Mechanical blocking or internal protective functions of the product can cause a motor standstill. Removing the cause of this problem or performing a reset can result in the machine or the system re-starting on its own. First, disconnect the product from the supply system before you start troubleshooting.

Risk of burns: The surface temperature of the product can exceed 60 °C during operation. Do not touch the product during operation. Let the product cool down before touching it.

33955948/EN – 05/2026

3 Product description

3.1 MOVI-C® modular automation system

MOVI-C® is the modular automation system that allows for the highest level of plant and machine automation. MOVI-C® comprises drive technology, Motion Control, control technology and visualization.

Modular, end-to-end, and scalable: The MOVI-C® modular automation system is your one-stop shop for every automation task. One manufacturer – one end-to-end solution: including services, hardware and software, from planning and startup to operation and servicing. SEW-EURODRIVE offers you maximum relief, future-proofing and the reassuring feeling of always having a contact person you can rely on.

3.1.1 Overview

MOVI-C® is a holistic concept consisting of the following building blocks:

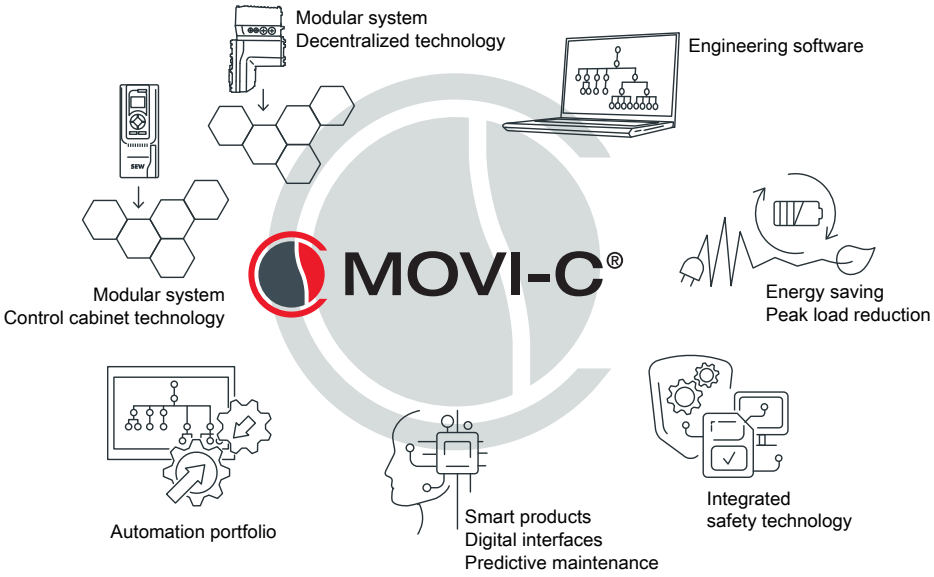

9007239339391499

3.1.2 End-to-end

The MOVI-C® modular automation system represents a consistent and complete solution for automation tasks.

We understand an end-to-end solution to mean:

- Uniform operating concept
- Uniform control concept
- Use of accessories across various devices, e.g. keypads
- MOVIKIT® software modules across various devices

This end-to-end solution offers you the following advantages:

- Easy changeover between control cabinet technology and decentralized technology
- Fast and simple startup
- Low training complexity

33955948/EN – 05/2026

3.1.3 Our promise

SEW-EURODRIVE offers you 3 × 3 reasons to enter the new MOVI-C® automation world:

- **Simplicity**
  - THREE steps: Plan – Connect – Move
- **Future-proofing**
  - THREE promises: Customized solutions – Today – and Tomorrow
- **Consulting and service**
  - THREE success factors: Delivery capability – Consulting – Worldwide

3.2 MOVITRAC® advanced

3.2.1 Overview

MOVITRAC® advanced is the inverter for direct line connection, suitable for a wide range of applications – from simple open-loop speed control to servo drives. The product series is used for the direct connection to controllers via industrial communication networks such as PROFINET, EtherNet/IP™, Modbus TCP or EtherCAT®. In addition, a basic variant is available exclusively for control via digital and analog inputs.

The inverter comprises the following components:

- Basic device:
  - Device variant for connecting to industrial communication networks
  - Device variant with functional safety in different functional versions
  - Device variant with MOVILINK® DDI digital data interface
- Application level for using MOVIKIT® software modules of the Drive category
- Optional keypads
- Optional memory module
- Accessories for EMC-compliant installation
- Accessories for connecting and controlling motors and brakes
- Prefabricated motor and encoder cables

For use in harsh environments, the inverters can be supplied with painted PCBs. The coating of the printed circuit boards increases their resistance against environmental influences.

33955948/EN – 05/2026

3.2.2 Options

Options	Chapter
CFE fieldbus interface for EtherNet/IP™ and Modbus TCP	"Description and technical data" (→ 🗎 66)
CFL fieldbus interface for POWERLINK	"Description and technical data" (→ 🗎 68)
CFN fieldbus interface for PROFINET	"Description and technical data" (→ 🗎 67)
EtherCAT® interface EtherCAT®/SBus^{PLUS}	"Description and technical data" (→ 🗎 69)
EtherCAT® interface EtherCAT®/CiA402	"Description and technical data" (→ 🗎 70)
CMM11A memory module	"Description" (→ 🗎 76)

3.2.3 Accessories

Accessories	Chapter
BW../BW..-T braking resistors	"Description and technical data" (→ 🗎 89)
NF.. line filter	"Description and technical data" (→ 🗎 106)
ND.. line choke	"Description and technical data" (→ 🗎 110)
HF.. output filter	"Description and technical data" (→ 🗎 114)
HD.. output choke	"Description and technical data" (→ 🗎 115)
ZD.. DC link choke	"Description and technical data" (→ 🗎 118)
CBG01A keypad	"Description and technical data" (→ 🗎 79)
CBG11A keypad	"Description and technical data" (→ 🗎 80)
CBG21A keypad	"Description and technical data" (→ 🗎 81)
CBG22A local keypad	"Description and technical data" (→ 🗎 83)
CDM11A diagnostic module **INFORMATION:** The CDM11A diagnostic module is required as an adapter for the CBG11A, CBG21A, and CBG22A keypads.	"Description and technical data" (→ 🗎 78)
COG11A door mounting frame	"Description and technical data" (→ 🗎 84)
Prefabricated cables	"Description and technical data" (→ 🗎 255)
System bus cable	"Overview and cable assignment" (→ 🗎 274)
Support plates	"Description" (→ 🗎 89)
Usable motor encoders	"Description" (→ 🗎 153)
CLH21A shield plate extension	"Description"
Connector	"Overview" (→ 🗎 122)
Standard accessories	"Overview" (→ 🗎 121)

33955948/EN – 05/2026

3.2.4 Overview of variants

The following table shows the versions that can be selected within a device variant. Device variants can be easily configured using the product configurator in SEW-EURODRIVE's Online Support.

Device variants	Selectable designs							Available in the following sizes	
	Application level	MOVIKIT® (ex-works)	MOVILINK® DDI	Safe functions					
				CSO	CSB	CSL	CSS		
	(-..0/…) (-..1/…) (-..2/…)	(…/000/…) (…/001/…)	(…/DI/…)	(…/CSO/…)	(…/CSB/…)	(…/CSL/…)	(…/CSS/…)	0S and 0L	3 to 8
Binary control (-00./…)									
MCX91A-….-000/…	✓	–	–	–	–	–	–	✓	–
MCX91A-….-000/…	✓	–	–	✓	–	–	–	✓	–
PROFINET(-T0./…/CFN/...)									
MCX91A-…-T0./…/CFN/…	✓	✓	–	✓	–	–	–	✓	–
MCX91A-…-T0./…/CFN/…	✓	✓	✓	✓	–	–	–	✓	✓
MCX91A-…-T0./…/CFN/…	✓	✓	✓	–	✓	–	–	✓	✓
MCX91A-…-T0./…/CFN/…	✓	✓	✓	–	–	✓	✓	✓	✓
EtherNet/IP™, Modbus TCP (-T0./…/CFE/...)									
MCX91A-…-T0./…/CFE/…	✓	✓	–	✓	–	–	–	✓	–
MCX91A-…-T0./…/CFE/…	✓	✓	✓	✓	–	–	–	✓	✓
MCX91A-…-T0./…/CFE/…	✓	✓	✓	–	✓	–	–	✓	✓
MCX91A-…-T0./…/CFE/…	✓	✓	✓	–	–	✓	✓	✓	✓
EtherCAT®/SBus^{PLUS} (-S0./...)									
MCX91A-…-S0./…	✓	✓	–	✓	–	–	–	✓	–
MCX91A-…-S0./…	✓	✓	✓	✓	–	–	–	✓	✓
MCX91A-…-S0./…	✓	✓	✓	–	✓	–	–	✓	✓
MCX91A-…-S0./…	✓	✓	✓	–	–	✓	✓	✓	✓
EtherCAT®/CiA402 (-E00/...)									
MCX91A-…-E00/…	–	–	–	✓	–	–	–	✓	–
MCX91A-…-E00/…	–	–	✓	✓	–	–	–	✓	✓
MCX91A-…-E00/…	–	–	✓	–	✓	–	–	✓	✓
MCX91A-…-E00/…	–	–	✓	–		✓	✓	✓	✓
POWERLINK/CiA402 (-L00/…/CFL/...)									
MCX91A-…-L00/…/CFL/…	–	–	–	✓	–	–	–	✓	–
MCX91A-…-L00/…/CFL/…	–	–	✓	✓	–	–	–	✓	✓
MCX91A-…-L00/…/CFL/…	–	–	✓	–	✓	–	–	✓	✓
MCX91A-…-L00/…/CFL/…	–	–	✓	–	–	✓	✓	✓	✓

✓ Design possible

– Design not possible

- The application levels -/..1/... and -/..2/... cannot be selected for devices with the CiA402 device profile.
- MOVIKIT® Velocity Drive is installed ex works for the "PROFINET and EtherNet/IP™, Modbus TCP" device variants. By configuring the devices accordingly, they can also be delivered without pre-installed MOVIKIT®. For the "EtherCAT®/SBus^{PLUS}" device variant, MOVIKIT® Velocity Drive can be selected ex works but is not set by default in the configurator.
- The memory module (.../CMM/...) and MOVILINK® DDI cannot be deselected for the designs "Safe functions CSB, CSL, and CSS".
- The options that can be selected for all devices are partially painted (/L), the diagnostic module (/CDM) and the memory module (/CMM).

33955948/EN – 05/2026

3.3 MOVI-C® CONTROLLER

MOVI-C® CONTROLLER	
MOVI-C® CONTROLLER UHX15A 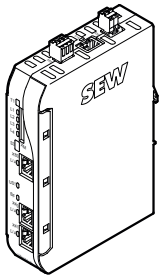	**Features:** • Recommended number of axes: 2 interpolated, 1 others not interpolated[1)] • Maximum 3 axes can be connected • EtherCAT® /SBus[PLUS] system bus (maximum number of stations: 128) • Device connection via EtherNet/IP™, Modbus TCP, PROFINET IO • Safe PD routing – PROFIsafe: maximum 3 axes • Ethernet interface for engineering tasks and TCP/IP and UDP via IEC 61131-3 • Memory: SD memory card with 512 MB for quick change • Web visualization via IEC • Large selection of MOVIKIT® software modules for motion control Further information can be found in the following documents: • "MOVI-C® CONTROLLER UHX15A" manual • "MOVI-C® – Automation with MOVI-C® CONTROLLER" manual
MOVI-C® CONTROLLER UHX25A 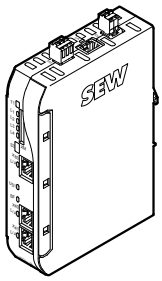	**Features:** • Recommended number of axes: 2 interpolated, 8 other not interpolated[1)] • EtherCAT®/SBus[PLUS] system bus (maximum number of stations: 128) • Device connection via EtherNet/IP™, Modbus TCP, PROFINET IO • Safe PD routing – PROFIsafe: maximum 8 axes • Ethernet interface for engineering tasks and TCP/IP and UDP via IEC 61131-3 • Memory: SD memory card with 512 MB for quick change • Web visualization via IEC • Large selection of MOVIKIT® software modules for motion control Further information can be found in the following documents: • "MOVI-C® CONTROLLER standard UHX25A" manual • "MOVI-C® – Automation with MOVI-C® CONTROLLER" manual
MOVI-C® CONTROLLER UHX45A 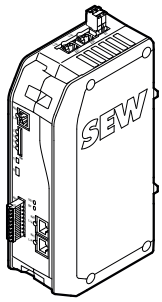	**Features:** • Recommended number of axes: 8 interpolated, 8 other not interpolated[1)] • System bus EtherCAT®/SBus[PLUS] (maximum number of stations: 128) • Device connection via EtherNet/IP™, Modbus TCP, PROFINET IO • Safe PD routing – PROFIsafe: maximum 8 axes • Ethernet interface for engineering tasks and TCP/IP and UDP via IEC 61131-3 • Memory: SD memory card with 512 MB for quick change • Web visualization via IEC • Large selection of MOVIKIT® software modules for motion control Further information can be found in the following documents: • "MOVI-C® CONTROLLER advanced UHX45A" manual • "MOVI-C® – Automation with MOVI-C® CONTROLLER" manual

33955948/EN – 05/2026

MOVI-C® CONTROLLER	
MOVI-C® CONTROLLER UHX65A 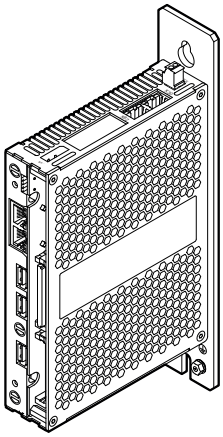	**Features:** • Recommended number of axes: 16 interpolated, 16 other not interpolated[1)] • Connected by hypervisor technology, a 2nd Windows 10 IoT operating system (for the 4-core variant) with corresponding Ethernet interface (optional) • Ethernet interface for engineering tasks or TCP/IP and UDP via IEC 61131-3 • System bus EtherCAT®/SBus^{PLUS} (maximum number of stations: 256) • Device connection via EtherNet/IP™, Modbus TCP, PROFINET IO (optional) • Connection as EtherNet/IP™ scanner or PROFINET IO controller (optional) • Safe PD routing – PROFIsafe: maximum 24 axes • Memory: CFast memory card with 2 GB for quick change • Visualization via Windows or web visualization via IEC • Large selection of MOVIKIT® software modules for motion control Further information can be found in the following documents: • "MOVI-C® CONTROLLER progressive UHX65A" manual • "MOVI-C® – Automation with MOVI-C® CONTROLLER" manual
MOVI-C® CONTROLLER UHX86A 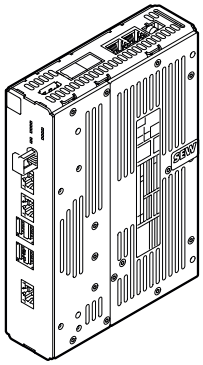	**Features:** • Recommended number of axes: More than 32 interpolated, more than 32 others not interpolated[1)] • Second operating system connected by hypervisor technology with 2 corresponding Ethernet interfaces (optional) • Ethernet interface for engineering tasks or TCP/IP and UDP via IEC 61131-3 • System bus EtherCAT®/SBus^{PLUS} (maximum number of stations: 256) • Device connection via EtherNet/IP™, Modbus TCP, PROFINET IO (optional) • Connection as EtherNet/IP™ scanner or PROFINET IO controller (optional) • Safe PD routing – PROFIsafe: maximum 24 axes • Memory: CFast memory card with 2 GB for quick change • Memory for Windows 10 IoT: SSD card with 128/256/480 GB (optional) • Visualization via Windows or web visualization via IEC • Large selection of MOVIKIT® software modules for motion control • Integrated Safety over EtherCAT® controller S05A (optional) Further information can be found in the following documents: • "MOVI-C® CONTROLLER UHX86A" manual • "MOVI-C® – Automation with MOVI-C® CONTROLLER" manual

1) Number of axes subject to the size of the user program in MOVIRUN® flexible and without specifying the minimum clock cycle time (not strictly limited).

33955948/EN – 05/2026

3.4 Technologies

Various technologies are used for inverters in the MOVI-C® modular automation system.

3.4.1 MOVI-C® CONTROLLER

MOVI-C® CONTROLLERs are the controllers made by SEW-EURODRIVE. They are optimized for gateway, motion, automation, or cyber-physical control tasks. MOVI-C® CONTROLLERs can be linked to the higher-level controller of a machine cell or system using classic PROFINET, EtherNet/IP™, or Modbus TCP fieldbus systems. Alternatively, they can realize the automation of entire machines and systems as independent controllers. In this case, as the masters, MOVI-C® CONTROLLERs take over smooth communication with the lower-level devices, e.g. MOVIDRIVE® inverters, and their clock-synchronous connection via EtherCAT®/SBus^{PLUS} or PROFINET.

A wide range of performance classes is available. All versions have a compact design, meaning they can fit into even small machine control cabinets.

The added value that really counts in terms of reducing complexity comes from the integrated MOVIKIT® software modules. This software gives you, as a user, more freedom to customize parameters while reducing your outlay on programming. MOVIKIT® software modules solve complex tasks such as positioning, load distribution, anti-oscillation control, or synchronization, and complete automation tasks such as robotics or storage/retrieval systems.

3.4.2 Functional safety

Safety technology is a fully integral part of the MOVI-C® modular automation system. Safe torque off (STO) is already included in the basic device. Additional safety functions such as safe inputs and outputs, safe stop functions, safe motion functions, safe position functions, safe braking, or safe communication are optional. Startup is guided by a wizard in the MOVISUITE® engineering tool.

3.4.3 Industrial cybersecurity

With increasing networking and the associated variety of internal and external access requirements, the importance of suitable protection concepts is growing.

It is not only users of critical infrastructures who must comply with minimum cybersecurity standards in IT and OT networks and protect their systems against cyber attacks. Supply chain security is particularly important, from component manufacturers, mechanical engineering companies and system integrators, through to the user's service provider.

- SEW-EURODRIVE has been certified by TÜV NORD for its Product Security Management and processes for a Secure Development Lifecycle (SDL) in accordance with IEC 62443-4-1 since 2021.
- Via the central CERT mailbox cert@sew-eurodrive.com, SEW-EURODRIVE guarantees a quick response to messages or inquiries about cybersecurity incidents within its scope of delivery.
- SEW-EURODRIVE ensures security advisories are automatically sent to customers and system operators who are registered on its mailing list.

33955948/EN – 05/2026

3.4.4 MOVILINK® DDI

The MOVILINK® DDI digital data interface connects the motor to the inverter. It transfers data for identifying and operating the motor.

Identification:

- Type and serial number of the gearmotor
- Order data
- Data for automatic startup of the inverter

Operation:

- Encoder data
- Motor temperature and brake temperature
- Brake wear
- Data from additional sensors (vibration, mounting position, humidity, magnetic field, etc.)

This allows for the simple, time-saving and error-free automation of processes:

- Startup
- Inventory
- Restart after motor replacement
- Centralized detection of motor replacement
- Monitoring of brake wear and maintenance planning
- Transfer of sensor data to higher-level condition monitoring systems

The coaxial cable for MOVILINK® DDI is particularly resistant to EMC interference and thus the basis for reliable single-cable technology. Depending on the inverter type, hybrid cables of up to 200 m motor cable length are available. They contain the power cables for the motor, the brake supply, and the MOVILINK® DDI data cable. For all motor types, SEW-EURODRIVE offers the MOVILINK® DDI digital data interface with connectors or direct connection via cable glands, with or without motor encoder.

3.4.5 DriveRadar®

When it comes to preserving or even increasing a system's value, the top priorities are excellent system availability and improved productivity. Digitalization can help reduce manual work and optimize the use of resources. Our DriveRadar® IoT Suite keeps working for you 24/7. The digitalized condition monitoring system automatically monitors your system and drives, so you have reliable, detailed information about the state of your components at your fingertips at all times. If there are any relevant changes in condition, the system will notify you and provide you with initial recommendations for action, so you can take steps at an early stage and prevent downtime.

Early warning

Thanks to automated condition monitoring, you receive prompt notification of any critical changes to the condition of your system and drives and any abnormal operating behavior.

Recognize trends

Continuous monitoring and an intelligent clear display allow you to detect deviations and plan ahead.

33955948/EN – 05/2026

Prevent downtimes

Thanks to greater transparency regarding the condition and operating behavior of your system and drives, you can vastly increase your level of protection against unplanned downtimes.

Operate efficiently

The forecasts calculated by the system mean you can plan service and maintenance activities preventively. What's more, you can control the length of your maintenance cycles as needed.

Save resources

You can make full and optimum use of your drive components' service life, thanks to the condition-based recommendations for action.

Record components

In order to record components easily and completely, all components carry a product label (QR code according to IEC 61406) in addition to the nameplate. Use the QR code to access the Digital Services of SEW-EURODRIVE. Product-specific information and functions are available here. The main function of the product labels with QR codes and the Digital Services Cockpit is to provide quick access to the Online Support when you are directly at a machine or system. The selection of functions is always the same: technical product data, documentation, spare parts, troubleshooting, and contact. That's exactly what you need for your product right now. DriveRadar® cyclically records the total stock of the system and determines the inventory list, knows warranty periods, detects device replacements, and can determine main points of failure.

3.4.6 Software tools

To support planning, ordering, delivery, startup, operation, and maintenance through to shutdown, SEW-EURODRIVE offers tools for online operation or for installation on the on-site computer.

MOVISUITE®

The engineering software MOVISUITE® is the central module of the MOVI-C® modular automation system. This software allows for intuitive operation with modern operating concepts. MOVISUITE® can be downloaded free of charge from the SEW-EURODRIVE website.

The central functions of MOVISUITE® are:

- Network scan
- Device startup and parameterization
- Data storage and data management
- Scope and diagnostics
- Programming environment for MOVI-C® CONTROLLER
- Parameterization for functional safety
- Parameterization and diagnostics environment for MOVIKIT® software modules

33955948/EN – 05/2026

SEW-Workbench

The SEW-Workbench is the central configuration software for drives, inverters and accessories from SEW-EURODRIVE. It can process any required configurations, from entering the application to gear unit, motor, and inverter calculations. Optimization of the various axis cycles including accessory selection and error check of the entire drive system design are further features. The SEW-Workbench can be downloaded free of charge from the SEW-EURODRIVE website.

Online Support

On the SEW-EURODRIVE homepage, the Online Support section offers a wealth of product-related information on the following topics:

Engineering and selection

Drive selection, product configuration, motor-inverter characteristics, energy efficiency tools, Safety Configuration Library for easy planning of functionally safe concepts

Inquiries and orders

Offers, quotations, purchase orders, overview of existing processes

Delivery and material flow

Order status, delivery notification, delivery time overview

Startup and maintenance

Spare parts, Pick-Up and Delivery Service, software license management, DriveRadar® IoT Suite

Data and documents

CAD data for products, product documentation, description files for communication systems, sample programs for SPS, CAE data, e.g. EPLAN, product details in the digital twin after scanning the QR code on the product.

3.4.7 Customization

Text that can be freely selected by the customer can be printed on the device nameplate of the inverters. This maximum 50-character text can be, for example, the company name, the purchase order number, or a material number of the customer. In addition, the text is saved to parameters in the inverter and is electronically available, for example, for automatic inventory.

3.4.8 Parameters ex works

SEW-EURODRIVE offers the ordering of products with customer-specific parameter settings in the delivery state. This option is known as "ex works parameters". Startup procedures and processes can be optimized in the best possible way using this option. Products with a customer-specific parameter set are marked with .../P... in the type designation.

33955948/EN – 05/2026

3.5 Setpoint processing

3.5.1 MOVIKIT® Drive

MOVIKIT® software modules are standardized control programs with a defined process data interface and a user-friendly configuration and diagnostics interface.

The "Drive" category includes MOVIKIT® software modules that provide single-axis functionalities and are operated directly on the inverter.

As a rule, the MOVIKIT® software modules are operated by a higher-level third-party controller via process data and cover a wide range of applications from speed-controlled applications, for example in materials handling technology, to positioning applications. No programming knowledge is required to use the MOVIKIT® Drive software modules. There is guided startup and a user-friendly operating and diagnostics interface is available.

Properties:

- Wide range of functions
- User-friendly user interface
- Input of parameters required only for the application
- Guided parameterization instead of complicated programming
- No programming experience required
- Simple training, therefore quick project planning and startup
- All motions are controlled directly in the inverter

The inverter can be ordered with a specific application level. The use of different MOVIKIT® software modules in the "Drive" category is allocated to every application level.

Application level	MOVIKIT® "Drive" category software module
0	Standard delivery state: Activation for MOVIKIT® software modules with application level 0, e.g. for MOVIKIT® Velocity Drive, MOVIKIT® Torque Drive.
1	Activation for MOVIKIT® software modules with application level 1, e.g. for MOVIKIT® Positioning Drive, MOVIKIT® RapidCreepPositioning Drive.
2	Enabling for customer-specific MOVIKIT® software modules

3.5.2 FCB concept

The FCB (function control block) concept describes the modular firmware design of inverters from the MOVI-C® modular automation system. This feature ensures that a wide range of drive functions can be selected or deselected quickly and easily using control words. All primary functions, i.e. functions that move or control the motor, are designed as individual FCBs that have to be selected to perform a specific task, e.g. positioning.

You can switch between different FCBs at any time. Switching to another FCB takes place with a maximum delay of 1 ms.

Different priorities are assigned to the FCBs. If an FCB with a higher priority than the currently active FCB is selected, the FCB with the higher priority is activated.

33955948/EN – 05/2026

3.5.3 CiA402 profile

The CiA402 drive profile offers functions that are required for motion control. It standardizes the communication and behavior of different drives. The CiA402 drive profile is often used especially for direct control of the inverter from an external PLC with motion control functionality and EtherCAT® master. The CiA402 drive profile offers standardized functions such as cyclic synchronous torque (CST), cyclic synchronous velocity (CSV) or cyclic synchronous position (CSP).

33955948/EN – 05/2026

3.6 Control topologies

The inverters can be controlled in different ways depending on the requirements.

3.6.1 Terminal control

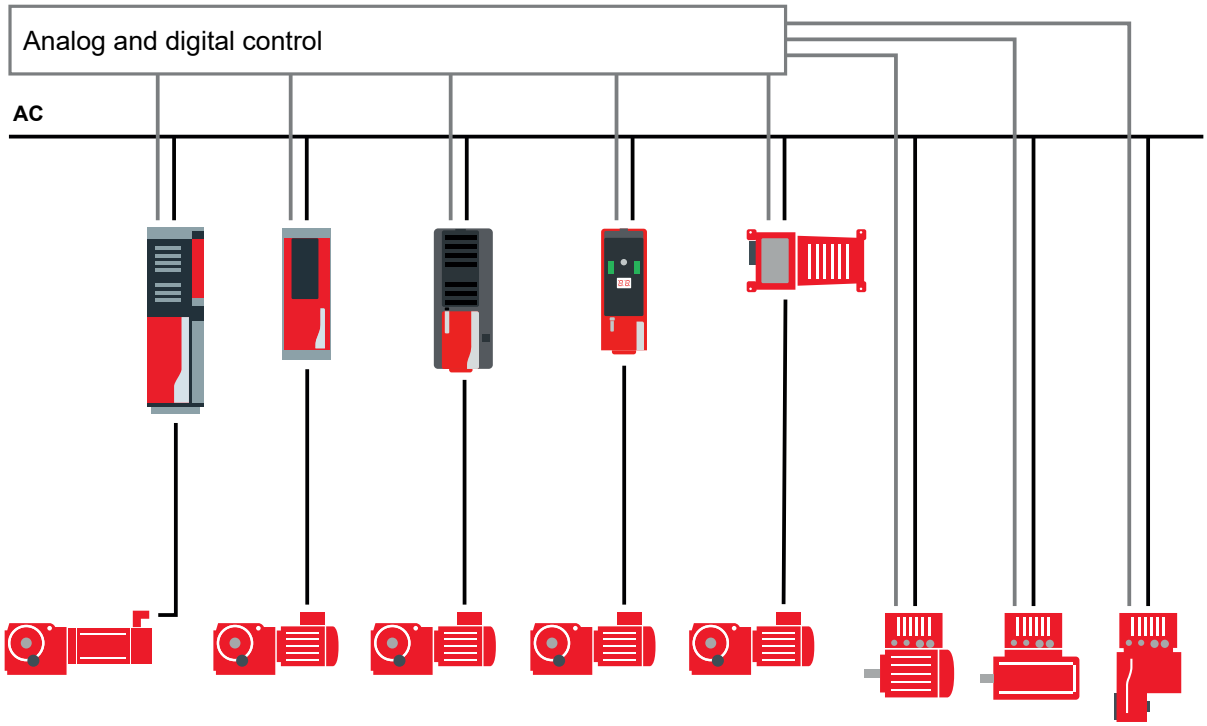

18014448077466123

In simple applications, it is often sufficient to control the inverters via digital or analog inputs. Each axis is controlled individually, e.g. via switches, pushbuttons, and potentiometers. Depending on the variant, the inverters from the MOVI-C® modular automation system have a different number of digital inputs and outputs, analog inputs and outputs, and relays and can be controlled via these.

33955948/EN – 05/2026

3.6.2 Single-axis automation

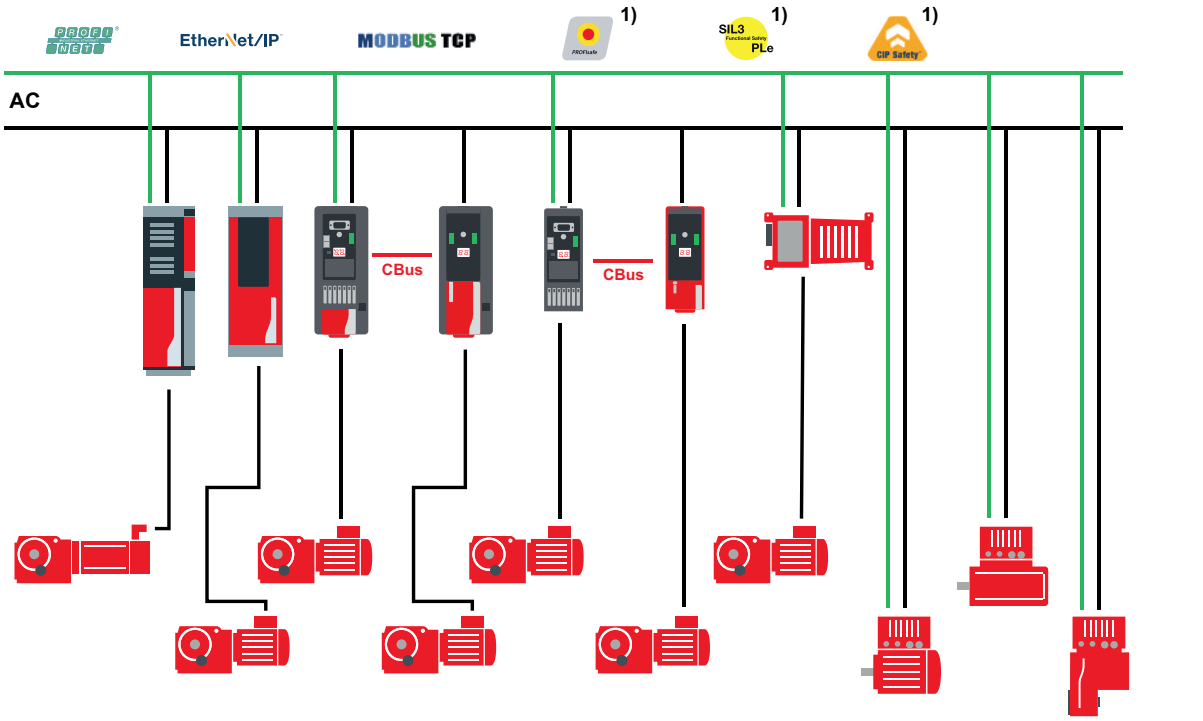

18014448246598283

[1] Not available with MOVITRAC® classic and MOVITRAC® basic.

The following devices are connected directly to the higher-level master via fieldbus interfaces:

- MOVIDRIVE® technology inverter
- MOVITRAC® advanced inverter
- MOVIGEAR® performance decentralized drive unit
- MOVIMOT® advanced decentralized drive unit
- MOVIMOT® performance decentralized drive unit
- MOVIMOT® flexible decentralized inverter

The following devices are indirectly connected to the higher-level master on an individual basis via gateways or gateway plus connected communication modules:

- MOVITRAC® classic inverter
- MOVITRAC® basic inverter

The drive function is delivered at speed and safely with graphic editors using the predefined MOVIKIT® Drive software modules. Each drive axis is controlled individually via the network.

Data is stored, for example, via a data exchange function on a memory card (if available).

3.6.3 Motion control or module automation

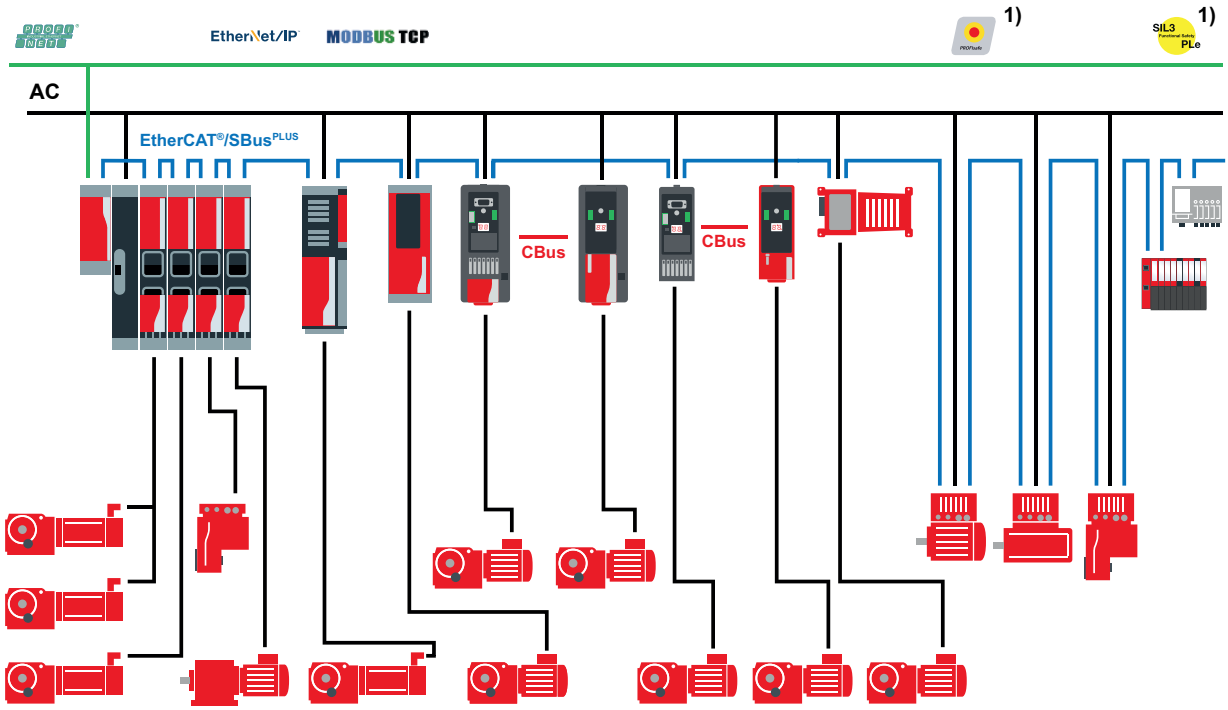

27021647501394571

[1] Not available with MOVITRAC® classic and MOVITRAC® basic.

The MOVI-C® CONTROLLER receives target values for single-axis motions or co-ordinated motions from the higher-level master via the fieldbus. The MOVI-C® CONTROLLER determines the setpoints for the connected inverters, thereby taking care of tasks such as phase-synchronous operation, electronic cam function, and kinematics.

Predefined MOVIKIT® software modules are used to implement the motion control drive function quickly and reliably with the aid of graphic editors. Thanks to more than 50 kinematic models, a large number of mechanical configurations are already covered. New functions for kinematic models can be custom-made by SEW-EURODRIVE. Data is stored via a data exchange function on a memory card in the MOVI-C® CONTROLLER.

33955948/EN – 05/2026

3.6.4 Motion control with CiA402 profile

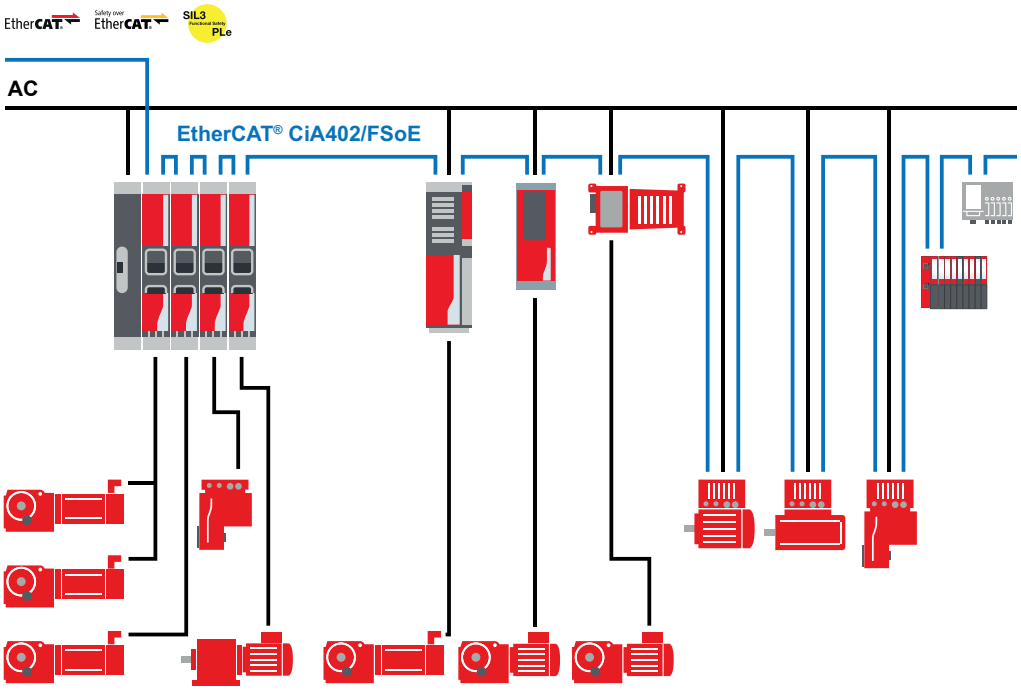

61732482955

The CiA402 drive profile offers functions that are required for motion control. It standardizes the communication and behavior of different drives. The CiA402 drive profile is often used especially for direct control of the inverter from an external PLC with motion control functionality and EtherCAT® master. The CiA402 drive profile offers standardized functions such as cyclic synchronous torque (CST), cyclic synchronous velocity (CSV) or cyclic synchronous position (CSP).

A design with CiA402 drive profile is available for inverters. This version is a device variant. If this version is used, the MOVI-C® CONTROLLER is not required. The functionality that can be generated by MOVIKIT® software modules is performed by the PLC in this case.

33955948/EN – 05/2026

3.6.5 POWERLINK

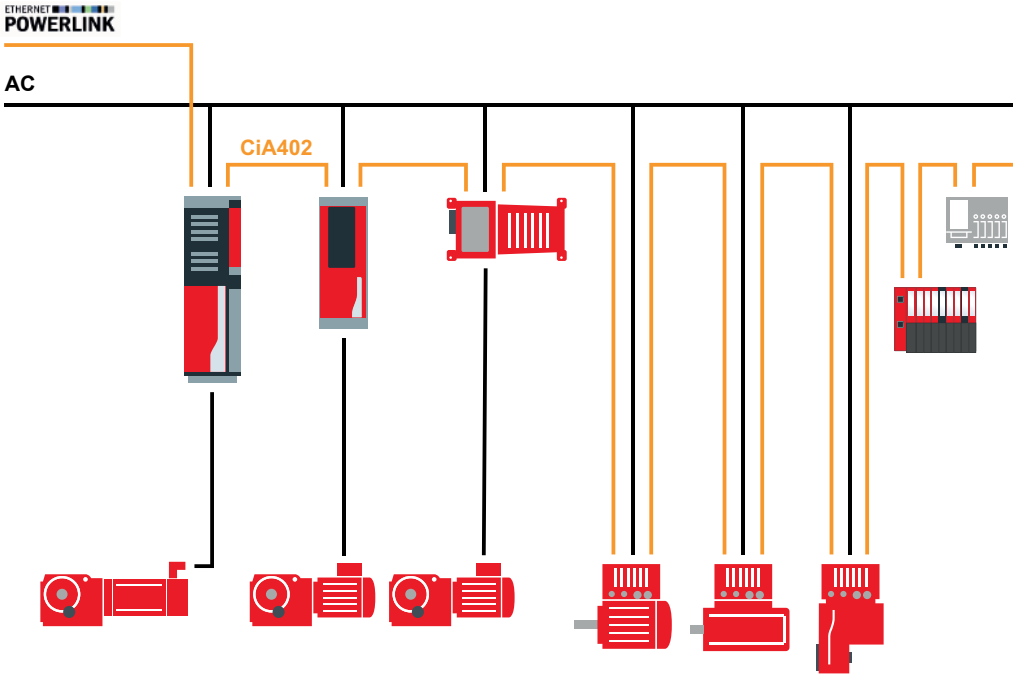

61732478219

The CiA402 profile for controlling inverters has established itself in systems with highly specific motion control applications that are calculated in the higher-level master controller.

For control via the CiA402 communication profile, the following devices can be connected to the controller via the POWERLINK interface:

- MOVIDRIVE® inverter
- MOVITRAC® inverter
- MOVIGEAR® performance decentralized drive unit
- MOVIMOT® flexible decentralized inverter

This means integration into the higher-level controller is particularly quick and easy, without any need for extensive conversion work.

33955948/EN – 05/2026

3.7 Motor control

3.7.1 Operable motors

Operable motors include:

- Asynchronous motors with and without encoder
- Synchronous motors with and without encoder

For further information, refer to chapter "Project planning" (→ 🗎 132).

3.7.2 Control mode

The characteristics of the motor connected to the inverter are influenced by the control modes used.

V/f

V/f control is intended for easy controlled operation of asynchronous motors without encoder feedback. The procedure operates an asynchronous machine on a parameterizable voltage/frequency characteristic. V/f control is suitable for applications with a limited speed setting range, where no dynamic step changes in load occur and where there are small requirements regarding the control characteristics.

ELSM®

The ELSM® control mode allows the operation of permanent-field synchronous motors without an encoder. This method is intended for applications in the field of horizontal and vertical materials handling technology or for pumps, fans or saws.

VFC^{PLUS}

VFC^{PLUS} is a high-performance control mode that can operate asynchronous motors and synchronous reluctance motors with very high torque dynamics with or without a rotary encoder.

The control mode can be operated as speed or torque control. This control mode calculates all important state variables for controlling the motor by using a motor model. Typical applications for the VFC^{PLUS} control mode are speed-controlled asynchronous machines with high demands on the speed and torque stability.

CFC

The CFC control mode is a current-controlled control mode. The CFC control mode allows the operation of asynchronous motors and permanent-field synchronous motors with maximum torque dynamics. The control mode requires information about the rotor angle and the motor speed. For this reason, an encoder feedback (motor encoder) is always necessary. The CFC control mode is suitable for drives with highly dynamic motion control.

3.7.3 Motor protection

The inverters of the MOVI-C® modular automation system offer thermal motor protection with sensorless motor protection models or with temperature sensors in the motor.

For more information, refer to chapter "Thermal motor protection" (→ 🗎 149) and "Thermal motor protection without temperature sensor" (→ 🗎 150).

33955948/EN – 05/2026

3.7.4 Encoder

The use of encoders on the motor can improve motor control:

- Position control
- Increased quality of torque and speed control

The inverters offer corresponding interfaces for the evaluation of analog and digital encoder signals.

3.7.5 Energy-saving function

The inverters of the MOVI-C® modular automation system offer various functions for saving energy:

- Application-specific speed adjustment
- Standby mode
- Reduced motor losses due to innovative control modes (flux optimization)
- Utilization of braking energy through energy recovery

3.7.6 Group drives

The inverters of the MOVI-C® modular automation system enable parallel connection and operation of several motors.

3.7.7 DC braking

With DC braking, the asynchronous motor brakes via current injection. The motor brakes without a braking resistor on the inverter.

3.7.8 Flying start

When the inverter is enabled, the "Flying start" function determines the current motor speed and the motor's direction of rotation and starts the output frequency that matches the motor. The function protects the inverter from overcurrent errors when connecting to rotating motors. For further information, refer to chapter "Control mode" (→ 🗎 134).

3.7.9 Output filter

For the operation of asynchronous motors, the use of an HF.. output filter is possible depending on the selected control mode. For further information, refer to chapter "HF.. output filters" (→ 🗎 180).

3.7.10 Standstill current function

With the standstill current function, the motor is energized even when the inverter is not enabled; this way, it remains magnetized and can be kept at different operating temperatures depending on the setting. For output stage inhibit FCB 01 or a safe stop STO, this function is disabled.

33955948/EN – 05/2026

3.8 Technology functions

The basic functions of the inverters can be adapted to the application via the parameter settings. Technology functions can be used to extend the basic functions.

3.8.1 Touchprobe

The "touchprobe" function can be used to record process values in a controlled manner when a specific switching event occurs, such as an edge change during a zero pulse of the encoder or at a digital input. For example, a light barrier signal can record the actual position of a distance encoder. The inverter passes this value on to a higher-level controller.

3.8.2 Counter function

The counter function counts edge changes at a digital input of the inverter. By setting parameters, you can define which edges are counted in which direction. The counter increases or decreases the value by 1 with each edge change. The counter value is stored in volatile memory. The counter is reset to 0 after the inverter is switched off and on again.

3.8.3 HTL counter

The HTL counter can count an incremental count upwards and downwards via 2 offset input signals. This value is retained for as long as the inverter is energized. The value can be set to an initial value at any time.

3.8.4 PID controller

The PID controller acts as an independent controller that calculates a control difference on the basis of a setpoint and actual value, and compensates for it. You can use the PID controller for temperature control, pressure control or other applications, for example. The PID controller can be switched on and off.

33955948/EN – 05/2026

4 Technical data

4.1 Markings

4.1.1 Basic device

Mark	Definition
CE	The CE marking indicates compliance with the following European directives: • Low Voltage Directive 2014/35/EU[1)] • EMC Directive 2014/30/EU • Machinery Directive 2006/42/EC • Directive 2011/65/EU for limiting the use of certain hazardous substances in electrical and electronic equipment • Ecodesign Regulation 2019/1781
	The waste disposal of this product is performed in compliance with the WEEE Directive 2012/19/EU.
EAC	The EAC mark indicates compliance with the requirements of the technical regulations of the Customs Union (Eurasian Economic Union), Armenia, Belarus, Kazakhstan, Kyrgyzstan, and Russia.
	The RCM mark indicates compliance with the technical regulations of the Australian Communications and Media Authority (ACMA).
50	The China RoHS mark indicates compliance with the directive SJ/ T 11364-2014 regarding the restriction of use of certain hazardous substances in electrical and electronic equipment and its packaging.
	The NM mark states compliance with the following Moroccan directives[2)]: • Low Voltage Directive no. 2573-14 (July 16, 2015) • EMC Directive N° 2574-14 (July 16, 2015)
UA.TR. 013	The UA.TR mark declares conformity with the technical regulations of Ukraine.
	The KC mark declares compliance with §3 of Article 58-2 for the Korean Radio Wave Act.
UK CA	The UKCA mark indicates compliance with British directives (see UK declaration of conformity or UK declaration of incorporation).
c UL us LISTED	The UL and cUL mark indicate UL approval. cUL is equally eligible for approval by the CSA.

1) For products with functional safety, the requirements from the Low Voltage Directive are fulfilled by the Machinery Directive.
2) The selectable approvals UKCA (Great Britain) and NM (Morocco) are mutually exclusive.

33955948/EN – 05/2026

4.1.2 Accessories

BW.. braking resistors

Mark	Definition
CE	The CE mark states compliance with the following European directives: • Low Voltage Directive 2014/35/EU • Directive 2011/65/EU for limiting the use of certain hazardous substances in electrical and electronic equipment
	The waste disposal of this product is performed in compliance with the WEEE Directive 2012/19/EU.
25 50 e	The China RoHS mark declares compliance with the Directive SJ/T 11364-2014 regarding the restriction of use of certain hazardous substances in electrical and electronic equipment and its packaging.
UK CA	The UKCA mark states the compliance with the following British guidelines: • Low Voltage Directive S. I. 2016/1101 • Directive S. I. 2012/3032 for limiting the use of certain hazardous substances in electrical and electronic equipment
c UR us	The cUR mark states the UL approval for this component.

NF.. line filters

Mark	Definition
CE	The CE mark states compliance with the following European directives: • Low Voltage Directive 2014/35/EU • Directive 2011/65/EU for limiting the use of certain hazardous substances in electrical and electronic equipment
	The waste disposal of this product is performed in compliance with the WEEE Directive 2012/19/EU.
e	The China RoHS mark declares compliance with the directive SJ/T 11364-2014 regarding the restriction of use of certain hazardous substances in electrical and electronic equipment and its packaging.
UK CA	The UKCA mark states the compliance with the following British guidelines: • Low Voltage Directive S. I. 2016/1101 • Directive S. I. 2012/3032 for limiting the use of certain hazardous substances in electrical and electronic equipment
c UL us LISTED	The UL and cUL mark indicate UL approval. cUL is equally eligible for approval by the CSA.

33955948/EN – 05/2026

ND.. line chokes

Mark	Definition
CE	The CE mark states compliance with the following European directives: • Low Voltage Directive 2014/35/EU • Directive 2011/65/EU for limiting the use of certain hazardous substances in electrical and electronic equipment
	The waste disposal of this product is performed in compliance with the WEEE Directive 2012/19/EU.
	The China RoHS mark declares compliance with the directive SJ/T 11364-2014 regarding the restriction of use of certain hazardous substances in electrical and electronic equipment and its packaging.
UKCA	The UKCA mark states the compliance with the following British guidelines: • Low Voltage Directive S. I. 2016/1101 • Directive S. I. 2012/3032 for limiting the use of certain hazardous substances in electrical and electronic equipment
c UL us	The cUR mark states the UL approval for this component.

HF.. output filters

Mark	Definition
CE	The CE mark states compliance with the following European directives: • Low Voltage Directive 2014/35/EU • Directive 2011/65/EU for limiting the use of certain hazardous substances in electrical and electronic equipment
	The waste disposal of this product is performed in compliance with the WEEE Directive 2012/19/EU.
	The China RoHS mark declares compliance with the directive SJ/T 11364-2014 regarding the restriction of use of certain hazardous substances in electrical and electronic equipment and its packaging.
UKCA	The UKCA mark states the compliance with the following British guidelines: • Low Voltage Directive S. I. 2016/1101 • Directive S. I. 2012/3032 for limiting the use of certain hazardous substances in electrical and electronic equipment
c UL us LISTED	The UL and cUL mark indicate UL approval. cUL is equally eligible for approval by the CSA.

33955948/EN – 05/2026

HD.. output chokes

Mark	Definition
CE	The CE mark states compliance with the following European directives: • Low Voltage Directive 2014/35/EU • Directive 2011/65/EU for limiting the use of certain hazardous substances in electrical and electronic equipment
	The waste disposal of this product is performed in compliance with the WEEE Directive 2012/19/EU.
	The China RoHS mark declares compliance with the directive SJ/T 11364-2014 regarding the restriction of use of certain hazardous substances in electrical and electronic equipment and its packaging.
UKCA	The UKCA mark states the compliance with the following British guidelines: • Low Voltage Directive S. I. 2016/1101 • Directive S. I. 2012/3032 for limiting the use of certain hazardous substances in electrical and electronic equipment
c UL us LISTED	The UL and cUL mark indicate UL approval. cUL is equally eligible for approval by the CSA.

ZD.. DC link chokes

Mark	Definition
CE	The CE mark states compliance with the following European directives: • Low Voltage Directive 2014/35/EU • Directive 2011/65/EU for limiting the use of certain hazardous substances in electrical and electronic equipment
	The waste disposal of this product is performed in compliance with the WEEE Directive 2012/19/EU.
	The China RoHS mark declares compliance with the directive SJ/T 11364-2014 regarding the restriction of use of certain hazardous substances in electrical and electronic equipment and its packaging.
UKCA	The UKCA mark states the compliance with the following British guidelines: • Low Voltage Directive S. I. 2016/1101 • Directive S. I. 2012/3032 for limiting the use of certain hazardous substances in electrical and electronic equipment
c UR us	The cUR mark states the UL approval for this component.

33955948/EN – 05/2026

4.2 General technical data

The following general technical data refers to the basic unit.

Interference immunity	Meets EN 61800-3; 2nd environment
Interference emission	Limit value class C2 according to EN 61800-3. From size 4, a line filter is required for limit class C2. The interference suppression level can be improved using appropriate measures. For further information, refer to chapter "EMC-compliant installation according to EN 61800-3" (→ 🗎 173).
Ambient temperature ϑ_{amb}	-10 – 40 °C without derating (sizes 0S and 0L) 0 – 40 °C without derating (sizes 3 – 8) 40 – 55 °C with derating For further information, refer to chapter "Project planning" > "Selection of an inverter" > "Power reducing factors" (→ 🗎 160).
Type of cooling	Natural convection (devices without internal fan): • MCX91A-0010 – 0025-5E3.. • MCX91A-0017 – 0025-2E3.. • MCX91A-0017 – 0025-2E1.. Forced convection through built-in temperature-dependent fan (ON – at heat sink temperature 44 °C / OFF – at heat sink temperature 40 °C): • MCX91A-0032-5E3.. – MCX91A-0160-5E3.. • MCX91A-0034-2E3.. – MCX91A-0140-2E3.. • MCX91A-0034-2E1.. – MCX91A-0110-2E1.. Forced convection due to built-in temperature-dependent speed-controlled fan: • From size 3
Short-circuit current	The uninfluenced short-circuit current in accordance with EN 61800-5-1 is 65 kA.
Degree of protection	Sizes 0S, 0L, 3, and 4: IP20 in accordance with EN 60529, only with power connectors plugged in for grid and motor Sizes 5 – 8: IP10 in accordance with EN 60529 (IP20 optional) with the corresponding covers
Pollution class	2 in accordance with IEC 60664-1
Overvoltage category	III in accordance with IEC 60664-1
Installation altitude above sea level:	No restrictions apply to altitudes ≤ 1000 m. The following restrictions apply to altitudes > 1000 m: • From 1000 m to max. 3800 m: I_N reduction by 1% per 100 m • From 2000 m to max. 3800 m: To maintain protective separation and the air gaps and creepage distances according to EN 61800-5-1, an overvoltage protection device must be connected upstream to reduce the overvoltages from category III to category II.

33955948/EN – 05/2026

4.3 Environmental conditions

4.3.1 Climatic conditions

Extended storage	Weatherproof IEC 60721-3-1 class 1K21, non-condensing, no condensation Deviating from the standard: Temperature -25 °C – +70 °C[1)]
Transport	Weatherproof IEC 60721-3-2 class 2K11, non-condensing, no condensation Deviating from the standard: Temperature -25 °C – +70 °C[1)]
Operation	Stationary use, weatherproof IEC 60721-3-3; class 3K22, non-condensing, no condensation deviating from the standard: Temperature 0 °C – +40 °C[2)]

1) Depending on the configuration.

2) Exception for sizes 0S and 0L (temperature -10 °C – +40 °C).

4.3.2 Special climatic conditions

Extended storage	Weatherproof IEC 60721-3-1 class 1Z1
Operation	Stationary use, weatherproof IEC 60721-3-3 class 3Z1

4.3.3 Biological conditions

Extended storage	Weatherproof IEC 60721-3-1 class 1B1
Transport	Weatherproof IEC 60721-3-2 class 2B1
Operation	Stationary use, weatherproof IEC 60721-3-3 class 3B1

4.3.4 Chemically active substances

Extended storage	Weatherproof IEC 60721-3-1 class 1C2 Deviating from the standard: no corrosive gases, no salt mist
Transport	Weatherproof IEC 60721-3-2 class 2C2, no sea water Deviating from the standard: no corrosive gases, no salt mist
Operation	Stationary use, weatherproof ISO 9223 class C3 Deviating from the standard: no corrosive gases, no salt mist

33955948/EN – 05/2026

4.3.5 Mechanically active substances

Extended storage	Weatherproof IEC 60721-3-1 class 1S10, no conductive dust
Transport	Weatherproof IEC 60721-3-2 class 2S1, no conductive dust
Operation	Stationary use, weatherproof IEC 60721-3-3 class 3S5, no conductive dust

4.3.6 Mechanical requirements

The specifications are characteristic values for the device test. The specifications are based on the test characteristic values according to IEC 60721-3-3 and correspond to class 3M5 according to EN 60721-3-3:1995.

The tests carried out in this context are time-limited vibration cycles.

Vibration (sinusoidal)	2 – 200 Hz: 1 g
Vibration (noise)	10 – 200 Hz: 0.3 m^2/s^3 200 – 500 Hz: 0.1 m^2/s^3 Corresponds to approx. 0.95 g_{rms} (g_{rms} = r.m.s. acceleration value)
Shocks (half sine)	10 g at 11 ms shock duration

33955948/EN – 05/2026

4.4 Technical data of the MCX91A.. basic device 3 × AC 380 – 500 V

All technical data refers to a nominal line voltage of AC 400 V.

4.4.1 Size 0S

Input

	Unit	MCX91A-....-5E3-4..						
Size		0S						
Type		**0010**	**0016**	**0020**	**0025**	**0032**	**0040**	**0055**
Nominal line voltage V_{line} (in accordance with EN 50160)	V	3 × AC 380 to 500						
Nominal current AC I_{line}	A	0.9	1.4	1.8	2.3	2.9	3.6	5
Line frequency f_{line}	Hz	50 to 60 ± 5%						
Controlled rectifier	–	No						
X1 connection contacts	–	"Connector " (→ 🗎 328)						

Output

	Unit	MCX91A-....-5E3-4..						
Size		0S						
Type		**0010**	**0016**	**0020**	**0025**	**0032**	**0040**	**0055**
Output voltage V_{out}	V	0 – V_{line} [1]						
Motor power ASM P_{Mot}	kW	0.25	0.37	0.55	0.75	1.1	1.5	2.2
Nominal output current I_N at the smallest possible PWM frequency	A	1	1.6	2	2.5	3.2	4	5.5
Overload capacity	–	150% I_N: max. 30 s at f_{PWM} = 4 kHz						
Continuous output current at f = 0 Hz	–	75% × I_N at f_{PWM} = 4 kHz						
Apparent output power S_N	kVA	0.7	1.1	1.4	1.7	2.2	2.8	3.8
Nominal DC link voltage V_{DCL_nom}	V	DC 560 at V_{line} = 400 V						
Maximum DC link voltage V_{DCL_max}	V	DC 980						
PWM frequency f_{PWM}	kHz	4, 8, 16 (adjustable)						
Maximum output frequency f_{max}	Hz	599 See chapter "Characteristics of the control modes" (→ 🗎 136)						
X2 connection contacts	–	"Connector " (→ 🗎 328)						

1) In inverter operation, it is technically impossible to provide the full line voltage (with direct power supply) at the output. The output voltage is generated from the DC link circuit and depends, among other things, on the level of its voltage, the control mode, and the operating point. Typically, the maximum output voltage in motor operation is approx. 8% below the line voltage.

Brake chopper

	Unit	MCX91A-....-5E3-4..						
Size		0S						
Type		**0010**	**0016**	**0020**	**0025**	**0032**	**0040**	**0055**
Minimum braking resistance value R_{BR_min}	Ω	90						
Brake chopper continuous power	kW	0.7	1.1	1.4	1.7	2.2	2.8	3.8
Brake chopper peak power	kW	150% × brake chopper continuous power × 0.9						
X2 connection contacts	–	"Connector " (→ 🗎 328)						

General

	Unit	MCX91A-....-5E3-4..						
Size		0S						
Type		**0010**	**0016**	**0020**	**0025**	**0032**	**0040**	**0055**
Power section nominal power loss[1]	W	7	11	15	19	27	34	50
Power consumption 24 V	W	Maximum 8.5 (depending on the device variant)						
Interference suppression	–	EMC filter limit value category C2 in accordance with EN 61800-3						
PE connection	–	M4 screw (with terminal clip)						

33955948/EN – 05/2026

	Unit	MCX91A-....-5E3-4..						
Size		0S						
Type		0010	0016	0020	0025	0032	0040	0055
Permitted number of times power may be switched on/off per minute	1/min	1						
Minimum switch-off time for power off	s	10						
Mass	kg	1.7						
Dimensions	–	See chapters "Preparing the control cabinet back panel" (→ 🗎 296) and "Dimension drawings" (→ 🗎 124)						

1) To calculate the thermal power loss, add the values of "24 V power consumption" and "Nominal power loss of the power section".

4.4.2 Size 0L, 3

Input

	Unit	MCX91A-...-5E3-4..				
Size		0L				3
Type		0070	0095	0125	0160	0240
Nominal line voltage V_{line} (in accordance with EN 50160)	V	3 × AC 380 to 500				
Nominal current AC I_{line}	A	6.3	8.6	11.3	14.4	21.6
Line frequency f_{line}	Hz	50 to 60 ± 5%				
Controlled rectifier	–	No				
X1 connection contacts	–	"Connector " (→ 🗎 328)				

Output

	Unit	MCX91A-...-5E3-4..				
Size		0L				3
Type		0070	0095	0125	0160	0240
Output voltage V_{out}	V	0 – V_{line} [1)]				
Motor power ASM P_{Mot}	kW	3	4	5.5	7.5	11
Nominal output current I_N at the smallest possible PWM frequency	A	7	9.5	12.5	16	24
Overload capacity	–	150%: max. 30 s at f_{PWM} = 4 kHz				
Continuous output current at f = 0 Hz	–	75% × I_N at f_{PWM} = 4 kHz				
Apparent output power S_N	kVA	4.8	6.6	8.7	11.1	16.8
Nominal DC link voltage V_{DCL_nom}	V	DC 560 at V_{line} = 400 V				
Maximum DC link voltage V_{DCL_max}	V	DC 980				
PWM frequency f_{PWM}	kHz	4, 8, 16 (adjustable)				
Maximum output frequency f_{max}	Hz	599 See chapter "Characteristics of the control modes" (→ 🗎 136)				
X2 connection contacts	–	"Connector " (→ 🗎 328)				

1) In inverter operation, it is technically impossible to provide the full line voltage (with direct power supply) at the output. The output voltage is generated from the DC link circuit and depends, among other things, on the level of its voltage, the control mode, and the operating point. Typically, the maximum output voltage in motor operation is approx. 8% below the line voltage.

Brake chopper

	Unit	MCX91A-...-5E3-4..				
Size		0L				3
Type		0070	0095	0125	0160	0240
Minimum braking resistance value R_{BR_min}	Ω	42			24	
Brake chopper continuous power	kW	4.8	6.6	8.7	11.1	16.8
Brake chopper peak power	kW	150% × brake chopper continuous power × 0.9				
X2 connection contacts	–	"Connector " (→ 🗎 328)				

33955948/EN – 05/2026

General

	Unit	MCX91A-...-5E3-4..				
Size		**0L**				**3**
Type		**0070**	**0095**	**0125**	**0160**	**0240**
Power section nominal power loss[1)]	W	63	83	120	147	236
Power consumption 24 V	W	Maximum 8.5 (depending on the device variant)				20
Interference suppression	–	EMC filter limit value category C2 in accordance with EN 61800-3				
PE connection	–	M4 screw (with terminal clip)				
Permitted number of times power may be switched on/off per minute	1/min	1				
Minimum switch-off time for power off	s	10				
Mass	kg	2.7			2.8	5.3
Dimensions	–	See chapters "Preparing the control cabinet back panel" (→ 🗎 296) and "Dimension drawings" (→ 🗎 124)				

1) To calculate the thermal power loss, add the values of "24 V power consumption" and "Nominal power loss of the power section".

4.4.3 Size 4, 5, 6

Input

	Unit	MCX91A-....-503-4..							
Size		**4**		**5**			**6**		
Type		**0320**	**0460**	**0620**	**0750**	**0910**	**1130**	**1490**	**1770**
Nominal line voltage V_{line} (in accordance with EN 50160)	V	3 × AC 380 to 500							
Nominal current AC I_{line}	A	28.8	41.4	55.8	67.5	81.9	102	134	159
Line frequency f_{line}	Hz	50 to 60 ± 5%							
Controlled rectifier	–	Yes							
X1 connection contacts	–	"Connector " (→ 🗎 328)		M8 bolt			M10 bolt		

Output

	Unit	MCX91A-....-503-4..							
Size		**4**		**5**			**6**		
Type		**0320**	**0460**	**0620**	**0750**	**0910**	**1130**	**1490**	**1770**
Output voltage V_{out}	V	0 – V_{line}[1)]							
Motor power ASM P_{Mot}	kW	15	22	30	37	45	55	75	90
Nominal output current I_N at the smallest possible PWM frequency	A	32	46	62	75	91	113	149	177
Overload capacity	–	150%: max. 30 s at f_{PWM} = 4 kHz							
Continuous output current at f = 0 Hz	–	75% × I_N at f_{PWM} = 4 kHz							
Apparent output power S_N	kVA	22.6	32.7	44.4	53.8	65.4	78.5	104	124
Nominal DC link voltage V_{DCL_nom}	V	DC 560 at V_{line} = 400 V							
Maximum DC link voltage V_{DCL_max}	V	DC 980							
PWM frequency f_{PWM}	kHz	4, 8, 16 (adjustable)							
Maximum output frequency f_{max}	Hz	599 See chapter "Characteristics of the control modes" (→ 🗎 136)							
X2 connection contacts	–	"Connector " (→ 🗎 328)		M8 bolt			M10 bolt		

1) In inverter operation, it is technically impossible to provide the full line voltage (with direct power supply) at the output. The output voltage is generated from the DC link circuit and depends, among other things, on the level of its voltage, the control mode, and the operating point. Typically, the maximum output voltage in motor operation is approx. 8% below the line voltage.

Brake chopper

	Unit	MCX91A-....-503-4..							
Size		**4**		**5**			**6**		
Type		**0320**	**0460**	**0620**	**0750**	**0910**	**1130**	**1490**	**1770**
Minimum braking resistance value R_{BR_min}	Ω	13		9	5.4		4.2	2.7	
Brake chopper continuous power	kW	22.6	32.7	44.4	53.8	65.4	78.5	104	124
Brake chopper peak power	kW	150% × brake chopper continuous power × 0.9							
X2 connection contacts	–	"Connector " (→ 328)		M8 bolt			M10 bolt		

General

	Unit	MCX91A-....-503-4..							
Size		**4**		**5**			**6**		
Type		**0320**	**0460**	**0620**	**0750**	**0910**	**1130**	**1490**	**1770**
Power section nominal power loss[1]	W	282	438	600	760	974	1160	1332	1693
Power consumption 24 V	W	30		15			20		
Interference suppression	–	Basic interference suppression integrated							
PE connection	–	M6 bolt		M8 bolt			M10 bolt		
Permitted number of times power may be switched on/off per minute	1/min	1							
Minimum switch-off time for power off	s	10							
Mass	kg	6.2		12			24.5		
Dimensions	–	See chapters "Preparing the control cabinet back panel" (→ 296) and "Dimension drawings" (→ 124)							

1) To calculate the thermal power loss, add the values of "24 V power consumption" and "Nominal power loss of the power section".

4.4.4 Size 7

Input

	Unit	MCX91A-....-503-4..		
Size		**7**		
Type		**2200**	**2500**	**3000**
Nominal line voltage V_{line} (in accordance with EN 50160)	V	3 × AC 380 to 500		
Nominal current AC I_{line}	A	198	225	270
Line frequency f_{line}	Hz	50 to 60 ± 5%		
Controlled rectifier	–	Yes		
X1 connection contacts	–	M12 bolt		

Output

	Unit	MCX91A-....-503-4..		
Size		**7**		
Type		**2200**	**2500**	**3000**
Output voltage V_{out}	V	0 – V_{line}[1]		
Motor power ASM P_{Mot}	kW	110	132	160
Nominal output current I_N at the smallest possible PWM frequency	A	220	250	300
Overload capacity	–	150%: max. 30 s at the smallest possible PWM frequency		
Continuous output current at f = 0 Hz	–	75% × I_N at the smallest possible PWM frequency		100% × I_N at the smallest possible PWM frequency
Apparent output power S_N	kVA	152	173	208
Nominal DC link voltage V_{DCL_nom}	V	DC 560 at V_{line} = 400 V		
Maximum DC link voltage V_{DCL_max}	V	DC 980		
PWM frequency f_{PWM}	kHz	4, 8 (adjustable)	4, 8 (adjustable)	2.5, 4, 8 (adjustable)

3955948/EN – 05/2026

	Unit	MCX91A-....-503-4..		
Size		**7**		
Type		**2200**	**2500**	**3000**
Maximum output frequency f_{max}	Hz	599 See chapter "Characteristics of the control modes" (→ 🗎 136)		
X2 connection contacts	–	M12 bolt		

1) In inverter operation, it is technically impossible to provide the full line voltage (with direct power supply) at the output. The output voltage is generated from the DC link circuit and depends, among other things, on the level of its voltage, the control mode, and the operating point. Typically, the maximum output voltage in motor operation is approx. 8% below the line voltage.

Brake chopper

	Unit	MCX91A-....-503-4..		
Size		**7**		
Type		**2200**	**2500**	**3000**
Minimum braking resistance value R_{BR_min}	Ω	2		
Brake chopper continuous power	kW	152	173	208
Brake chopper peak power	kW	150% × brake chopper continuous power × 0.9		
X2 connection contacts	–	M12 bolt		

General

	Unit	MCX91A-....-503-4..		
Size		**7**		
Type		**2200**	**2500**	**3000**
Power section nominal power loss[1)]	W	2484	2818	3100
Power consumption 24 V	W	20		
Interference suppression	–	Basic interference suppression integrated		
PE connection	–	M12 bolt		
Permitted number of times power may be switched on/off per minute	1/min	1		
Minimum switch-off time for power off	s	10		
Mass	kg	84		
Dimensions	–	See chapters "Preparing the control cabinet back panel" (→ 🗎 296) and "Dimension drawings" (→ 🗎 124)		

1) To calculate the thermal power loss, add the values of "24 V power consumption" and "Nominal power loss of the power section".

4.4.5 Size 8

Input

	Unit	MCX91A-....-503-4..		
Size		**8**		
Type		**3800**	**4700**	**5880**
Nominal line voltage (in accordance with EN 50160) V_{line}	V	3 × AC 380 – 500 V		
Nominal current AC I_{line}	A	342	423	529
Line frequency f_{line}	Hz	50 to 60 ± 5%		
Controlled rectifier	–	Yes		
X1 connection contacts	–	M12 bolt, each terminal is provided in duplicate		

Output

	Unit	MCX91A-....-503-4..		
Size		**8**		
Type		**3800**	**4700**	**5880**
Output voltage V_{out}	V	0 – V_{line}[1)]		
Motor power ASM P_{Mot}	kW	200	250	315

33955948/EN – 05/2026

	Unit	MCX91A-....-503-4..		
Size		8		
Type		**3800**	**4700**	**5880**
Nominal output current I_N at the smallest possible PWM frequency	A	380	470	588
Overload capacity	–	150% I_N at f_{PWM} = 2.5 kHz		
Continuous output current at f = 0 Hz	–	100% × I_N at f_{PWM} = 2.5 kHz		
Apparent output power S_N	kVA	264	326	408
DC link nominal voltage V_{DCL_nom} [2)]	V	DC 560		
Maximum DC link voltage V_{DCL_max}	V	DC 980		
PWM frequency f_{PWM}	kHz	2.5, 4 (adjustable)		
Maximum output frequency f_{max}	Hz	599 See chapter "Characteristics of the control modes" (→ 🗎 136)		
X2 connection contacts	–	M12 bolt, each terminal is provided in duplicate		

1) In inverter operation, it is technically impossible to provide the full line voltage (with direct power supply) at the output. The output voltage is generated from the DC link circuit and depends, among other things, on the level of its voltage, the control mode, and the operating point. Typically, the maximum output voltage in motor operation is approx. 8% below the line voltage.

2) The maximum voltage occurring is DC 980 V.

Brake chopper

	Unit	MCX91A-....-503-4..		
Size		8		
Type		**3800**	**4700**	**5880**
Minimum braking resistance value R_{BR_min}	Ω	0.9		
Brake chopper continuous power	kW	263	326	407
Brake chopper peak power	–	150% × brake chopper continuous power × 0.9		
X2 connection contacts	–	M12 bolt, each terminal is provided in duplicate		

General

	Unit	MCX91A-....-503-4..		
Type		**3800**	**4700**	**5880**
Size		8		
Power section nominal power loss [1)]	W	2939	3780	4983
Power consumption 24 V	W	25		
Interference suppression	–	Basic interference suppression integrated		
PE connection	–	M12 bolt		
Permitted number of times power may be switched on/off per minute	min^{-1}	1		
Minimum switch-off time for power off	s	10		
Mass	kg	148		
Dimensions	–	See chapters "Preparing the control cabinet back panel" (→ 🗎 296) and "Dimension drawings" (→ 🗎 124)		

1) To calculate the thermal power loss, add the values of "24 V power consumption" and "Nominal power loss of the power section".

33955948/EN – 05/2026

4.5 Technical data of the MCX91A.. basic device 3 × AC 200 – 240 V

All technical data refers to a nominal line voltage of AC 230 V.

4.5.1 Size 0S

Input

	Unit	MCX91A-....-2E3-4..				
Size		0S				
Type		**0017**	**0025**	**0034**	**0042**	**0055**
Nominal line voltage V_{line} (in accordance with EN 50160)	–	3 × AC 200 – 240 V				
Nominal current AC I_{line}	A	1.5	2.3	3.1	3.8	5
Line frequency f_{line}	Hz	50 to 60 ± 5%				
Controlled rectifier	–	No				
X1 connection contacts	–	"Connector " (→ 🗎 328)				

Output

	Unit	MCX91A-....-2E3-4..				
Size		0S				
Type		**0017**	**0025**	**0034**	**0042**	**0055**
Output voltage V_{out}	V	0 – V_{line} [1]				
Motor power ASM P_{Mot}	kW	0.25	0.37	0.55	0.75	1.1
Nominal output current I_N at the smallest possible PWM frequency	A	1.7	2.5	3.4	4.2	5.5
Overload capacity	–	150%: max. 30 s at f_{PWM} = 4 kHz				
Continuous output current at f = 0 Hz	–	75% × I_N at f_{PWM} = 4 kHz				
Apparent output power S_N	kVA	0.68	1	1.35	1.67	2.2
Nominal DC link voltage V_{DCL_nom}	V	DC 325 at V_{line} = 230 V				
Maximum DC link voltage V_{DCL_max}	V	DC 650				
PWM frequency f_{PWM}	kHz	4, 8, 16 (adjustable)				
Maximum output frequency f_{max}	Hz	599 See chapter "Characteristics of the control modes" (→ 🗎 136)				
X2 connection contacts	–	"Connector " (→ 🗎 328)				

1) In inverter operation, it is technically impossible to provide the full line voltage (with direct power supply) at the output. The output voltage is generated from the DC link circuit and depends, among other things, on the level of its voltage, the control mode, and the operating point. Typically, the maximum output voltage in motor operation is approx. 8% below the line voltage.

Brake chopper

	Unit	MCX91A-....-2E3-4..				
Size		0S				
Type		**0017**	**0025**	**0034**	**0042**	**0055**
Minimum braking resistance value R_{BR_min}	Ω	60				
Brake chopper continuous power	kW	0.68	1	1.35	1.67	2.2
Brake chopper peak power	kW	150% × brake chopper continuous power × 0.9				
X2 connection contacts	–	"Connector " (→ 🗎 328)				

General

	Unit	MCX91A-....-2E3-4..				
Size		0S				
Type		**0017**	**0025**	**0034**	**0042**	**0055**
Power section nominal power loss[1]	W	10	16	25	32	44
Power consumption 24 V	W	Maximum 8.5 (depending on the device variant)				
Interference suppression	–	EMC filter limit value category C2 in accordance with EN 61800-3				
PE connection	–	M4 screw (with terminal clip)				

33955948/EN – 05/2026

	Unit	MCX91A-....-2E3-4..				
Size		0S				
Type		**0017**	**0025**	**0034**	**0042**	**0055**
Permitted number of times power may be switched on/off per minute	1/min	1				
Minimum switch-off time for power off	s	10				
Mass	kg	1.7				
Dimensions	–	See chapters "Preparing the control cabinet back panel" (→ 296) and "Dimension drawings" (→ 124)				

1) To calculate the thermal power loss, add the values of "24 V power consumption" and "Nominal power loss of the power section".

4.5.2 Size 0L, 3

Input

	Unit	MCX91A-....-2E3-4..			
Size		0L			3
Type		**0070**	**0093**	**0140**	**0213**
Nominal line voltage V_{line} (in accordance with EN 50160)	V	3 × AC 200 to 240			
Nominal current AC I_{line}	A	6.3	8.4	12.6	19.2
Line frequency f_{line}	Hz	50 to 60 ± 5%			
Controlled rectifier	–	No			
X1 connection contacts	–	"Connector " (→ 328)			

Output

	Unit	MCX91A-....-2E3-4..			
Size		0L			3
Type		**0070**	**0093**	**0140**	**0213**
Output voltage V_{out}	V	0 – V_{line} [1)]			
Motor power ASM P_{Mot}	kW	1.5	2.2	3.7	5.5
Nominal output current I_N at the smallest possible PWM frequency	A	7	9.3	14	21.3
Overload capacity	–	150%: max. 30 s at f_{PWM} = 4 kHz			
Continuous output current at f = 0 Hz	–	75% × I_N at f_{PWM} = 4 kHz			
Apparent output power S_N	kVA	2.8	3.7	5.6	8.5
Nominal DC link voltage V_{DCL_nom}	V	DC 325 at V_{line} = 230 V			
Maximum DC link voltage V_{DCL_max}	V	DC 650			
PWM frequency f_{PWM}	kHz	4, 8, 16 (adjustable)			
Maximum output frequency f_{max}	Hz	599 See chapter "Characteristics of the control modes" (→ 136)			
X2 connection contacts	–	"Connector " (→ 328)			

1) In inverter operation, it is technically impossible to provide the full line voltage (with direct power supply) at the output. The output voltage is generated from the DC link circuit and depends, among other things, on the level of its voltage, the control mode, and the operating point. Typically, the maximum output voltage in motor operation is approx. 8% below the line voltage.

Brake chopper

	Unit	MCX91A-....-2E3-4-..			
Size		0L			3
Type		**0070**	**0093**	**0140**	**0213**
Minimum braking resistance value R_{BR_min}	Ω	24		13	
Brake chopper continuous power	kW	2.8	3.7	5.6	8.5
Brake chopper peak power	kW	150% × brake chopper continuous power × 0.9			
X2 connection contacts	–	"Connector " (→ 328)			

33955948/EN – 05/2026

General

	Unit	MCX91A-....-2E3-4..			
Size		**0L**			**3**
Type		**0070**	**0093**	**0140**	**0213**
Power section nominal power loss[1)]	W	51	71	107	174
Power consumption 24 V	W	Maximum 8.5 (depending on the device variant)			20
Interference suppression	–	EMC filter limit value category C2 according to EN 61800-3			
PE connection	–	M4 screw (with terminal clip)			
Permitted number of times power may be switched on/off per minute	1/min	1			
Minimum switch-off time for power off	s	10			
Mass	kg	2.7			5.3
Dimensions	–	See chapters "Preparing the control cabinet back panel" (→ 🗎 296) and "Dimension drawings" (→ 🗎 124)			

1) To calculate the thermal power loss, add the values of "24 V power consumption" and "Nominal power loss of the power section".

4.5.3 Size 4, 5, 6

Input

	Unit	MCX91A-....-203-4..				
Size		**4**		**5**		**6**
Type		**0290**	**0420**	**0570**	**0840**	**1080**
Nominal line voltage V_{line} (in accordance with EN 50160)	–	3 × AC 200 – 240 V				
Nominal line current AC I_{line}	A	26.1	37.8	51.3	75.6	97.2
Line frequency f_{line}	Hz	50 to 60 ± 5%				
Controlled rectifier	–	Yes				
X1 connection contacts	–	"Connector " (→ 🗎 328)		M8 bolt		M10 bolt

Output

	Unit	MCX91A-....-203-4..				
Size		**4**		**5**		**6**
Type		**0290**	**0420**	**0570**	**0840**	**1080**
Output voltage V_{out}	V	0 – V_{line}[1)]				
Motor power ASM P_{Mot}	kW	7.5	11	15	22	30
Nominal output current I_N at the smallest possible PWM frequency	A	29	42	57	84	108
Overload capacity	–	150%: max. 30 s at f_{PWM} = 4 kHz				
Continuous output current at f = 0 Hz	–	75% × I_N at f_{PWM} = 4 kHz				
Apparent output power S_N	kVA	11.6	16.7	22.7	33.5	43
Nominal DC link voltage V_{DCL_nom}	V	DC 325 at V_{line} = 230 V				
Maximum DC link voltage V_{DCL_max}	V	DC 650				
PWM frequency f_{PWM}	kHz	4, 8, 16 (adjustable)				
Maximum output frequency f_{max}	Hz	599 See chapter "Characteristics of the control modes" (→ 🗎 136)				
X2 connection contacts	–	"Connector " (→ 🗎 328)		M8 bolt		M10 bolt

1) In inverter operation, it is technically impossible to provide the full line voltage (with direct power supply) at the output. The output voltage is generated from the DC link circuit and depends, among other things, on the level of its voltage, the control mode, and the operating point. Typically, the maximum output voltage in motor operation is approx. 8% below the line voltage.

Brake chopper

	Unit	MCX91A-....-203-4..				
Size		**4**		**5**		**6**
Type		**0290**	**0420**	**0570**	**0840**	**1080**
Minimum braking resistance value R_{BR_min}	Ω	6.7		4.2	2.7	2

33955948/EN – 05/2026

	Unit	MCX91A-....-203-4..				
Size		**4**		**5**		**6**
Type		**0290**	**0420**	**0570**	**0840**	**1080**
Brake chopper continuous power	kW	11.6	16.7	22.7	33.5	43
Brake chopper peak power	kW	150% × brake chopper continuous power × 0.9				
X2 connection contacts	–	"Connector " (→ 328)		M8 bolt		M10 bolt

General

	Unit	MCX91A-....-203-4..				
Size		**4**		**5**		**6**
Type		**0290**	**0420**	**0570**	**0840**	**1080**
Power section nominal power loss[1)]	W	218	345	459	756	910
Power consumption 24 V	W	30		15		20
Interference suppression	–	Basic interference suppression integrated				
PE connection	–	M6 bolt		M8 bolt		M10 bolt
Permitted number of times power may be switched on/off per minute	1/min	1				
Minimum switch-off time for power off	s	10				
Mass	–	6.2		11.7		23.7
Dimensions	–	See chapters "Preparing the control cabinet back panel" (→ 296) and "Dimension drawings" (→ 124)				

1) To calculate the thermal power loss, add the values of "24 V power consumption" and "Nominal power loss of the power section".

33955948/EN – 05/2026

4.6 Technical data of the MCX91A.. basic device 1 × AC 200 – 240 V

All technical data refers to a nominal line voltage of AC 230 V.

4.6.1 Size 0S

Input

	Unit	MCX91A-....-2E1-4..			
Size		0S			
Type		**0017**	**0025**	**0034**	**0042**
Nominal line voltage V_{line} (in accordance with EN 50160)	V	1 × AC 200 to 240			
Nominal current AC I_{line}	A	5.5	7.1	8.9	11.1
Line frequency f_{line}	Hz	50 to 60 ± 5%			
Controlled rectifier	–	Yes (precharge circuit)			
X1 connection contacts	–	"Connector " (→ 🗎 328)			

Output

	Unit	MCX91A-....-2E1-4..			
Size		0S			
Type		**0017**	**0025**	**0034**	**0042**
Output voltage V_{out}	V	0 – V_{line} [1]			
Motor power ASM P_{Mot}	kW	0.25	0.37	0.55	0.75
Nominal output current I_N at the smallest possible PWM frequency	A	1.7	2.5	3.4	4.2
Overload capacity	–	150% × I_N: max. 30 s at f_{PWM} = 4 kHz			
Continuous output current at f = 0 Hz	–	75% × I_N at f_{PWM} = 4 kHz			
Apparent output power S_N	kVA	0.68	1	1.35	1.67
Nominal DC link voltage V_{DCL_nom}	V	DC 325 at V_{line} = 230 V			
Maximum DC link voltage V_{DCL_max}	V	DC 650			
PMV frequency f_{PWM}	kHz	4, 8, 16 (adjustable)			
Maximum output frequency f_{max}	Hz	599 See chapter "Characteristics of the control modes" (→ 🗎 136)			
X2 connection contacts	–	"Connector " (→ 🗎 328)			

1) In inverter operation, it is technically impossible to provide the full line voltage (with direct power supply) at the output. The output voltage is generated from the DC link circuit and depends, among other things, on the level of its voltage, the control mode, and the operating point. Typically, the maximum output voltage in motor operation is approx. 8% below the line voltage.

Brake chopper

	Unit	MCX91A-....-2E1-4..			
Size		0S			
Type		**0017**	**0025**	**0034**	**0042**
Minimum braking resistance value R_{BR_min}	Ω	61			
Brake chopper continuous power	kW	0.68	1	1.35	1.67
Brake chopper peak power	kW	150% × apparent output power S_N			
X2 connection contacts	–	"Connector " (→ 🗎 328)			

General

	Unit	MCX91A-....-2E1-4..			
Size		0S			
Type		**0017**	**0025**	**0034**	**0042**
Power section nominal power loss[1]	W	15	24	36	48
Power consumption 24 V	W	Max. 8.5			
Interference suppression	–	EMC filter limit value category C2 in accordance with EN 61800-3			
PE connection	–	M4 screw			

33955948/EN – 05/2026

	Unit	MCX91A-....-2E1-4..			
Size		0S			
Type		**0017**	**0025**	**0034**	**0042**
Permitted number of times power may be switched on/off per minute	min^{-1}	0.5			
Minimum switch-off time for power off	s	10			
Mass	kg	1.7			
Dimensions	–	See chapters "Preparing the control cabinet back panel" (→ 296) and "Dimension drawings" (→ 124)			

1) To calculate the thermal power loss, add the values of "24 V power consumption" and "Nominal power loss of the power section".

4.6.2 Size 0L

Input

	Unit	MCX91A-...--2E1-4..			
Size		0L			
Type		**0055**	**0070**	**0093**	**0110**[1]
Nominal line voltage V_{line} (in accordance with EN 50160)	V	1 × AC 200 – 240			
Nominal current AC I_{line}	A	14.8	16	20	20.7
Line frequency f_{line}	Hz	50 to 60 ± 5%			
Controlled rectifier	–	Yes (precharge circuit)			
X1 connection contacts	–	"Connector " (→ 328)			

1) Using a line choke is mandatory with MCX91A-0110-2E1-4...

Output

	Unit	MCX91A-....--2E1-4..			
Size		0L			
Type		**0055**	**0070**	**0093**	**0110**[1]
Output voltage V_{out}	V	0 – V_{line}[2]			
Motor power ASM P_{Mot}	kW	1.1	1.5	2.2	3
Nominal output current I_N at the smallest possible PWM frequency	A	5.5	7	9.3	11
Overload capacity	–	150% × I_N: max. 30 s at f_{PWM} = 4 kHz			
Continuous output current at f = 0 Hz	–	75% × I_N at f_{PWM} = 4 kHz			
Apparent output power S_N	kVA	2.2	2.8	3.7	4.4
Nominal DC link voltage V_{DCL_nom}	V	DC 325 at V_{line} = 230 V			
Maximum DC link voltage V_{DCL_max}	V	DC 650			
PWM frequency f_{PWM}	kHz	4, 8, 16 (adjustable)			
Maximum output frequency f_{max}	Hz	599 See chapter "Characteristics of the control modes" (→ 136)			
X2 connection contacts	–	"Connector " (→ 328)			

1) Using a line choke is mandatory with MCX91A-0110-2E1-4...

2) In inverter operation, it is technically impossible to provide the full line voltage (with direct power supply) at the output. The output voltage is generated from the DC link circuit and depends, among other things, on the level of its voltage, the control mode, and the operating point. Typically, the maximum output voltage in motor operation is approx. 8% below the line voltage.

Brake chopper

	Unit	MCX91A-....-2E1-4..			
Size		0L			
Type		**0055**	**0070**	**0093**	**0110**[1]
Minimum braking resistance value R_{BR_min}	Ω	24			
Brake chopper continuous power	kW	2.2	2.8	3.7	4.4
Brake chopper peak power	kW	150% × apparent output power S_N			

33955948/EN – 05/2026

	Unit	MCX91A-....-2E1-4..			
Size		0L			
Type		**0055**	**0070**	**0093**	**0110**[1]
X2 connection contacts	–	"Connector " (→ 328)			

1) Using a line choke is mandatory with MCX91A-0110-2E1-4-..

General

	Unit	MCX91A-....-2E1-4..			
Size		0L			
Type		**0055**	**0070**	**0093**	**0110**[1]
Power section nominal power loss[2]	W	57	76	110	147
Power consumption 24 V	W	Max. 8.5			
Interference suppression	–	EMC filter limit value category C2 in accordance with EN 61800-3			
PE connection	–	M4 screw			
Permitted number of times power may be switched on/off per minute	min^{-1}	0.5			
Minimum switch-off time for power off	s	10			
Mass	kg	2.7			
Dimensions	–	See chapters "Preparing the control cabinet back panel" (→ 296) and "Dimension drawings" (→ 124)			

1) Using a line choke is mandatory with MCX91A-0110-2E1-4-..

2) To calculate the thermal power loss, add the values of "24 V power consumption" and "Nominal power loss of the power section".

4.7 Electronics data

If inductive loads are connected to outputs, you must install an external protective element (e.g. freewheeling diode or varistor).

4.7.1 X5: Input DC 24 V voltage supply

	Specification
Number	1
DC 24 V voltage supply	Connection of external power supply unit 24 V according to IEC 61131 DC 24 V -10%, +20%
Connection	X5: 24 V X5: GND
Connection contacts	"Spring-loaded terminal (pluggable)" (→ 328)

4.7.2 X20: Digital inputs DI01 – DI06

	Specification
Number	6
Design	Types 1 and 3 in accordance with IEC 61131-2
Cycle time	2 ms
Response time	100 µs plus cycle time
Current consumption	6 mA at 30 V
Maximum output current 24 V Auxiliary voltage output X20:7 VO24	50 mA

33955948/EN – 05/2026

	Specification
Connection	X20:1 – X20:6 DI01 – DI06: Selection option, see parameter menu DI04: Counter input or master frequency input, maximum 120 kHz The following functions are available only for inverters with **PROFINET, EtherNet/IP, Modbus TCP, EtherCAT®/CiA402, EtherCAT®/SBus^{PLUS} or POWERLINK/CiA402**: All inputs are suitable for Touchprobe functionality, latency < 100 µs, maximum 2 Touchprobe inputs simultaneously. DI04, DI05, DI06: HTL encoder connection[1)] DI04, DI05: HTL counter connection[1)]
Connection contacts	"Spring-loaded terminal (pluggable)" (→ 🗎 328)
Maximum cable length	30 m (exception HTL encoder: 50 m)

1) 56 kHz max.

4.7.3 X20: Digital inputs and digital outputs DIO01 – DIO02

If inductive loads are connected to outputs, you must install an external protective element (e.g. freewheeling diode or varistor).

	Specification
Number	2
Design	Type 2 according to **IEC 61131-2**
Cycle time	2 ms
Response time	175 µs plus cycle time
Maximum output current	50 mA
Short-circuit protection	Yes
Connection	X20:9 – X20:10 DIO01 – DIO02: Selection option, see parameter menu
Connection contacts	"Spring-loaded terminal (pluggable)" (→ 🗎 328)
Maximum cable length	30 m

4.7.4 X23: Analog input AI1 and analog input/analog output AIO1

	Specification
Number	2 (1 input and 1 input/output)
Cycle time	2 ms
Response time	175 µs plus cycle time
Resolution	10 bits
Short-circuit protection	Yes
Connection	X23:1 Reference voltage output REF1: • 10 V (-5% / +20%), I_{max} = 3 mA • The resistance value of external setpoint potentiometer R must be ≥ 3 kΩ. X23:2 Analog input AI1: • 0 – 10 V, input resistance R_i ≥ 20 kΩ • 0 (4) – 20 mA (R_i = 250 Ω) X23:3 GND reference potential: • The input is related to GND • Analog input for voltage or current, switchable via DIP switch S4. X23:4 Analog input or analog output AIO1 parameterizable: • AIO1 as analog input: 0 – 10 V, input resistance R_i ≥ 20 kΩ • AIO1 as analog output: 0 – 10 V, I_{max} = 1 mA
Connection contacts	"Spring-loaded terminal (pluggable)" (→ 🗎 328)
Maximum cable length	30 m

4.7.5 X22: Relay output DOR

	Specification
Number	1

3955948/EN – 05/2026

	Specification
Current-carrying capacity of relay contacts	V_{max} = DC 30 V, I_{max} = DC 0.8 A
Connection	X22:1: DOR-C, shared relay contact X22:2: DOR-NO, NO contact X22:3: DOR-NC, NC contact Selectable, see parameter menu
Connection contacts	"Spring-loaded terminal (pluggable)" (→ 🗎 328)
Maximum cable length	30 m

4.7.6 X10: DB00 brake control

	Specification
Number	1
Output voltage	Depending on external DC 24 V voltage supply
Current-carrying capacity	150 mA, 3.6 W, protection circuit required for inductive load (e.g. freewheeling diode or varistor)
Connection	X10:1 DB0/DB00 X10:2 GND
Connection contacts	"Spring-loaded terminal (pluggable)" (→ 🗎 328)
Maximum cable length between inverter and brake control	30 m

4.7.7 X10: Sensor input for temperature evaluation of the TF1 motor

	Specification
Number	1
Temperature sensors with evaluation capability	PTC thermistor (TF) Bimetallic temperature switch (TH) Temperature sensor KTY84 –130 (KY) Pt1000 (PK or PI)
Response threshold TF	1830 Ω
Connection	X10:3 TF1 X10:4 GND
Connection contacts	"Spring-loaded terminal (pluggable)" (→ 🗎 328)

4.7.8 X16: MOVILINK® DDI interface (optional)

	Specification
Number	1
Output voltage	DC 24 V, -10%, +20%
Maximum output current I_{max}	500 mA[1)]
Short-circuit protection for encoder supply	Yes, a permanent short circuit is not permitted
Connection	FAKRA connector, socket contact
Maximum cable length	200 m

1) Take into account and potential limitations, see chapter "Selection of the 24 V supply voltage".

4.7.9 X18: EI7C FS encoder connection (optional)

	Specification
Number	1
Supply voltage	DC 19.2 – 30 V
Maximum output current per track	30 mA
Increments per revolution	96
Connection	Mini IO socket contact for EI7C FS encoder
Maximum cable length	100 m

33955948/EN – 05/2026

4.7.10 IN X30/X40 and OUT X30/X41: System bus or fieldbus connection (optional)

	Specification
Number	2 (optional)
Connection	RJ45 socket

4.7.11 X6: STO terminal (optional)

	Specification
Number	1 (optional)
Design	Type 2 according to IEC 61131-2
Power consumption	150 mW
Minimum voltage rise	1 V/ms
Connection ../CSO..	The following terminals are connected internally: • X6:1 and X6:3 F_STO_P • X6:2 and X6:4 F_STO_M X6:5 VO24_STO X6:6 GND Input capacitance F_STO_P against F_STO_M and against GND: • Typical: 300 pF • Maximum: 500 pF Due to the current carrying capacity, a maximum of 10 devices can be connected to one another via terminal X6.
Connection contacts	"Spring-loaded terminal (pluggable)" (→ 🗎 328)
Maximum cable length	30 m

4.7.12 X60: Safe digital inputs and digital outputs

For more information, refer to chapter "Technical data – functional safety" (→ 🗎 73).

4.8 CFE fieldbus interface for EtherNet/IP™ and Modbus TCP

INFORMATION

The CFE fieldbus interface for EtherNet/IP™ and Modbus TCP is only available with the **MCX91A-....-T0./../CFE** unit designs.

4.8.1 Description

The fieldbus interface makes it possible to connect the inverter to EtherNet/IP™ or Modbus TCP-based, higher-level automation, project planning, and visualization systems. The fieldbus interface has the following characteristics:

- EtherNet/IP™ or Modbus TCP
- Media redundancy
- Integrated switch with cut-through procedure

When using the fieldbus interface, you can communicate directly with the devices via Ethernet and use the MOVISUITE® engineering software for startup, diagnostics, and parameterization purposes.

An integrated web server also makes it possible to access diagnostic values quickly and easily using a standard Internet browser. You can access this web server at the following address: http: //*IP address of the device*.

33955948/EN – 05/2026

4.8.2 Technical data

CFE fieldbus interface for EtherNet/IP™ and Modbus TCP	
Application protocols	EtherNet/IP™, Modbus TCP, HTTP, SNMP, DHCP, SEW Application Services
Network protocols	ARP, ICMP
Media redundancy (DLR)	Yes
Baud rate	100 MBaud/10 MBaud, full duplex/half duplex
Connection	IN X30/X40 and OUT X30/X41
Connection technology	2 × RJ45
Ethernet switch	Integrated
Ethernet switch switching technology	Cut through
Ethernet switch latency period	5.5 µs
Manufacturer ID	$013B_{hex}$ (EtherNet/IP™)
Port numbers used	Port overview, see Online Support
Application profiles	CIP Safety™

4.9 CFN fieldbus interface for PROFINET

INFORMATION

The CFN fieldbus interface for PROFINET is only available with the **MCX91A-....-T0./../CFN** unit designs.

4.9.1 Description

The fieldbus interface makes it possible to connect the inverter to PROFINET-based, higher-level automation, project planning and visualization systems.

When using the fieldbus interface, you can communicate directly with the devices via Ethernet and use the MOVISUITE® engineering software for startup, diagnostics, and parameterization purposes.

An integrated web server also makes it possible to access diagnostic values quickly and easily using a standard Internet browser. You can access this web server at the following address: http: //*IP address of the device*.

4.9.2 Technical data

CFN fieldbus interface for PROFINET	
PROFINET	RT, IRT (Isochronous Real Time)
Conformance class	C
Netload class	3
Topology detection (LLDP)	Yes
Automatic addressing (LLDP, DCP)	Yes

33955948/EN – 05/2026

CFN fieldbus interface for PROFINET	
Media redundancy (MRP)	Yes
I&M data	I&M0 – I&M5
Application profiles	PROFIsafe, PROFIenergy
Shared device	Yes
Manufacturer ID	$010A_{hex}$
Baud rate	100 MBaud, full duplex
Connection	IN X30/X40 and OUT X30/X41
Connection technology	2 × RJ45
Ethernet switch	Integrated
Ethernet switch switching technology	Cut through
Ethernet switch latency period	5.5 µs
EtherType 8892_{hex}	PROFINET
EtherType 88B5	Address Editor from SEW-EURODRIVE
GSD file name	GSDML-Vx.xy-SEW-MOVI-C-MOVITRAC-CFN-yyyymmdd-hhmmss
SEW engineering	Yes (firmware update, diagnostics)
Port numbers used	Port overview, see Online Support
Web server	Yes

4.10 CFL fieldbus interface for POWERLINK

INFORMATION

The CFL fieldbus interface for POWERLINK is only available with the **MCX91A-....-L00/../CFL** unit designs.

4.10.1 Description

The fieldbus interface makes it possible to connect the inverter to POWERLINK-based, higher-level automation, project planning and visualization systems as well as the CiA402 device profile.

The fieldbus interface has the following characteristics:

- POWERLINK slave (CiA402 drive profile)
- Integrated switch with cut-through procedure

When using the fieldbus interface, you can communicate directly with the devices via POWERLINK and use the MOVISUITE® engineering software for startup, diagnostics, and parameterization purposes.

An integrated web server also makes it possible to access diagnostic values quickly and easily using a standard browser. You can reach the web server via the following address → http://*IP address of the device*.

33955948/EN – 05/2026

4.10.2 Technical data

CFL21A fieldbus interface for POWERLINK	
Power consumption	2 W
Automatic baud rate detection	Yes, full duplex
Supported baud rate	100 MBaud
Connection	IN X30/X40 and OUT X30/X41
Connection technology	2 × RJ45
XDD file name	SEW-MOVI-C-MOVIDRIVE.xdd
Application profiles	CiA402
Manufacturer ID	59_{hex}
Device family	MOVI-C®
Application protocols	POWERLINK, SEW Application Services
Permitted cable types	Category 5 and higher, class D according to IEC 11801
Port numbers used	Port overview, see Online Support
Maximum cable length	100 m

4.11 Communication interface EtherCAT®/SBus^{PLUS}

4.11.1 Description

INFORMATION

The EtherCAT®/SBus^{PLUS} communication interface is only available with the MCX91A-....-S0./... unit designs.

The optional EtherCAT®/SBus^{PLUS} communication interface provides a powerful synchronous connection. EtherCAT® stations from SEW-EURODRIVE or other manufacturers can be controlled and diagnosed by a MOVI-C® CONTROLLER.

The functions of the MOVI-C® CONTROLLER are:

- Freely programmable sequence control according to IEC 61131 for automating drive and logic tasks
- Central data storage for all inverters of the MOVI-C® modular automation system from SEW-EURODRIVE on EtherCAT®/SBus^{PLUS}
- Plug-and-play device replacement through automatic data recovery
- Central setpoint input for clock-synchronous drives and for auxiliary drives
- Motion functions: Speed control, torque specification, position specification, phase-synchronous operation, cams, software modules, kinematic models
- EtherCAT®/SBus^{PLUS} master for SEW-EURODRIVE components and for peripheral devices with EtherCAT® interface
- Fieldbus device interface to higher-level control systems
- Diagnostics and visualization of the automation system

33955948/EN – 05/2026

4.11.2 Technical data

Communication interface EtherCAT®/SBus^{PLUS}	
Power consumption	2 W
Automatic baud rate detection	Yes, full duplex
Supported baud rate	100 MBaud
Connection	IN X30/X40 and OUT X30/X41
Connection technology	2 × RJ45
Product code	B_{hex}
Application profiles	SBus^{PLUS}
Manufacturer ID	59_{hex}
Device family	MOVI-C®
Application protocols	EtherCAT®, SdO, FoE
Permitted cable types	Category 5 and higher, class D according to IEC 11801
Maximum cable length	100 m

4.12 EtherCAT®/CiA402 communication interface

4.12.1 Description



INFORMATION

The EtherCAT®/CiA402 communication interface is only available with the MCX91A-....-E00/... unit designs.

The EtherCAT® interface makes it possible to connect the inverter to EtherCAT®-based automation and visualization systems. The CiA402 device profile is supported.

The EtherCAT®/CiA402 communication interface has the following characteristics:

- EtherCAT® (process data)
- EtherCAT® with CiA402 device profile

When using the communication interface, you can communicate directly with the device via EtherCAT®. The engineering software can be used for startup, diagnostics and parameterization via the master-side mailbox gateway, while EtherCAT® is running.

4.12.2 Technical data

Communication interface EtherCAT®/CiA402	
Power consumption	2 W
Automatic baud rate detection	Yes, full duplex
Supported baud rate	100 MBaud
Connection	IN X30/X40 and OUT X30/X41
Connection technology	2 × RJ45
Product code	6_{hex}

33955948/EN – 05/2026

Communication interface EtherCAT®/CiA402	
Application profiles	CiA402
Manufacturer ID	59_{hex}
Device family	MOVI-C®
Application protocols	EtherCAT®, SdO, FoE
Permitted cable types	Category 5 and higher, class D according to IEC 11801
Maximum cable length	100 m

4.13 Safety options CSO/CSB/CSL/CSS

The MOVISAFE® CSO/CSB/CSL/CSS safety options provide further safety subfunctions according to EN IEC 61800-5-2 in addition to the STO function.

	MOVISAFE® .../CSO/...	MOVISAFE® .../CSB/...	MOVISAFE® .../CSL/...	MOVISAFE® .../CSS/...
Safe inputs	–	4	4	4
Safe outputs	–	–	1	1
Safe stop functions	STO	STO SS1-t	STO SS1-t SS1-r	STO SS1-t SS1-r
Safe motion functions	–	–	SLS SSM SDI	SLS SSM SDI SOS[1)] SS2-t[1)] SS2-r[1)] SSR SLA[1)]
Safe positioning functions	–	–	–	SLI
Other functions	–	–	SBC EDM	SBC EDM
Safe communication	–	PROFIsafe Safety over EtherCAT® CIP Safety™	PROFIsafe Safety over EtherCAT® CIP Safety™	PROFIsafe Safety over EtherCAT® CIP Safety™

33955948/EN – 05/2026

	MOVISAFE® .../CSO/...	MOVISAFE® .../CSB/...	MOVISAFE® .../CSL/...	MOVISAFE® .../CSS/...
Safety encoder	–	–	EI7C FS	EI7C FS EK8Z AK8Z EK9Z EK0Z AK0Z

1) Not possible in conjunction with EI7C FS.

For more information, refer to the **Product manual** > chapter "Project planning for functional safety" (→ 🗎 190).

33955948/EN – 05/2026

4.14 Technical data – functional safety

4.14.1 General electrical data

The safety option is supplied with voltage by the basic device. Switch the devices with safety option to standby mode every 30 minutes at most.

The supply voltage connected externally to the device must be DC 24 V (-10%/+20%). Furthermore, the voltage source must comply with the regulations according to PELV.

4.14.2 STO safety subfunction

The following table shows the technical data of the STO safety subfunction for devices with the CSO safety option.

The safe digital input F_STO_P corresponds to type 3 according to IEC 61131-2.

The reference potential for F_STO_P is STO_M (contact at terminal X6:2).

	Terminal	Technical data		
STO safety contact	X6	–		
Electrical data of safe digital input F_STO_P		**Minimum**	**Typical**	**Maximum**
Input voltage range	X6:1	DC -3 V	DC 24 V	DC 30 V
Input capacitance against STO_M		–	300 pF	500 pF
Input capacitance against GND		–	300 pF	500 pF
Power consumption of F_STO_P at DC 24 V		–	–	150 mW
Input voltage for ON state (STO)		DC 11 V	–	–
Input voltage for OFF state (STO)		–	–	DC 5 V
Permitted leakage current of the external safety controller		–	–	1 mA
Minimum voltage rise		1 V/ms		
MCX91A-.../CSO...		The following terminals are connected internally: • X6:1 and X6:3 • X6:2 and X6:4 Due to the current carrying capacity, a maximum of 10 devices can be connected to one another via terminal X6.		
Connection contacts		Spring-loaded terminal (pluggable) - 1 conductor: 0.25 – 1.5 mm^2 - 2 conductors: 0.25 – 0.5 mm^2 (Twin conductor end sleeve)		
Maximum cable length		30 m		

4.14.3 Safe digital inputs

Safe digital inputs F-DI00 – F-DI03	
Properties	DC 24 V input pursuant to EN 61131-2, type 3

33955948/EN – 05/2026

Safe digital inputs F-DI00 – F-DI03	
Signal level	• Logic "0" = LOW input: ≤ 5 V or ≤ 1.5 mA • Logic "1" = HIGH input: ≥ 11 V and ≥ 2 mA
Reference ground	GND
Input current	≤ 15 mA
Input resistance	≤ 4 kΩ at DC 24 V
Input filter time, parameterizable	4 ms – 250 ms
Permitted cable length	30 m
Error response time for single-pole connection	No greater than the response time without fault
Edge steepness of input signal	> 120 V/s
Input capacitance	< 500 pF
Polarity reversal protection	Up to DC 30 V

4.14.4 Sensor supply

Sensor supply F-SS0, F-SS1	
Properties	• DC 24 V output according to EN 61131-2 • Short circuit and overload protection • No galvanic isolation
Rated current	150 mA per sensor supply
Inrush current (≤ 10 ms)	300 mA
Short-circuit protection	1.2 A
Internal voltage drop	< DC 1.3 V
Pulsed voltage supply (if activated)	• 2 ms open (LOW) • Period duration, pulsed voltage supply: 8 ms
Permitted cable length	30 m (per sensor)
Leakage current (F-SSx disabled)	< 0.1 mA

4.14.5 Safe digital output

Safe digital output F-DO00_P/M	
Properties	• DC 24 V output according to EN 61131-2 • Short circuit and overload protection
Rated current	150 mA
Inrush current (≤ 10 ms)	300 mA
Leakage current (F-DOx disabled)	< 0.1 mA
Maximum switching frequency	10 Hz during operation

33955948/EN – 05/2026

Safe digital output F-DO00_P/M	
Overload protection	210 mA
Minimum current for wire break monitoring	15 mA
Permitted cable length	30 m
Load capacitance (max. test pulse duration)	≤ 300 nF
Load capacitance (1 ms test pulse duration)	≤ 50 nF
Capacitance to GND/PE (sourcing/sinking only)	≤ 10 nF
Load capacitance with diode decoupling	≤ 12 µF
Load inductance	≤ 100 µH
Load inductance with overrunning clutch	≤ 40 H
Minimum load resistance	> 130 Ω

4.14.6 MOVISAFE® CSO characteristic safety values

	Characteristic values	
	EN 62061/EN 61800-5-2	**EN ISO 13849-1**
Tested safety class/standard basis	SIL 2	PL d
Probability of dangerous failure per hour (PFH_D value)	30×10^{-9} 1/h	
Service life	20 years, after which the component must be replaced with a new one.	
Proof test interval	> 20 years	–
Safe state	Safe Torque Off (STO)	
Safety subfunction	STO, SS1[1)] according to EN 61800-5-2	

1) With suitable external control

4.14.7 MOVISAFE® CSB characteristic safety values

	Characteristic values	
	EN 62061/EN 61800-5-2	**EN ISO 13849-1**
Tested safety class/standard basis	SIL 2	PL d
Probability of dangerous failure per hour (PFH_D value)	7×10^{-9} 1/h	
Mission time/service life	20 years, after which the component must be replaced with a new one.	
Proof test interval	20 years	–
Safe state	Value "0" for all safe F-DO process values (output disabled)	

33955948/EN – 05/2026

	Characteristic values	
	EN 62061/EN 61800-5-2	EN ISO 13849-1
Safety subfunction	• STO, SS1-t • Safe digital inputs/outputs • Safe communication	

4.14.8 MOVISAFE® CSL characteristic safety values

	Characteristic values	
	EN 62061/EN 61800-5-2	EN ISO 13849-1
Tested safety class/standard basis	SIL 2	PL d
Probability of dangerous failure per hour (PFH_D value)	7×10^{-9} 1/h	
Mission time/service life	20 years, after which the component must be replaced with a new one.	
Proof test interval	20 years	–
Safe state	Value "0" for all safe F-DO process values (output disabled)	
Safety subfunction	• STO, SS1, SLS, SSM, SDI, SBC • Safe digital inputs/outputs • Safe communication	

4.14.9 MOVISAFE® CSS characteristic safety values

	Characteristic values	
	EN 62061/EN 61800-5-2	EN ISO 13849-1
Tested safety class/standard basis	SIL 2	PL d
Probability of dangerous failure per hour (PFH_D value)	7×10^{-9} 1/h	
Mission time/service life	20 years, after which the component must be replaced with a new one.	
Proof test interval	20 years	–
Safe state	Value "0" for all safe F-DO process values (output disabled)	
Safety subfunction	• STO, SS1, SS2, SOS, SLS, SSM, SSR, SDI, SLA, SLI, SBC • Safe digital inputs/outputs • Safe communication	

4.15 CMM11A memory module

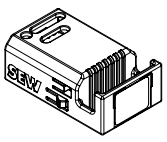

25585405451

33955948/EN – 05/2026

The pluggable memory module is supplied independently of the device variant.

For certain device variants, the memory module can be deselected when configuring the inverter. It is not possible to deselect the memory module if the device variant includes the CSB, CSL, and CSS safety options.

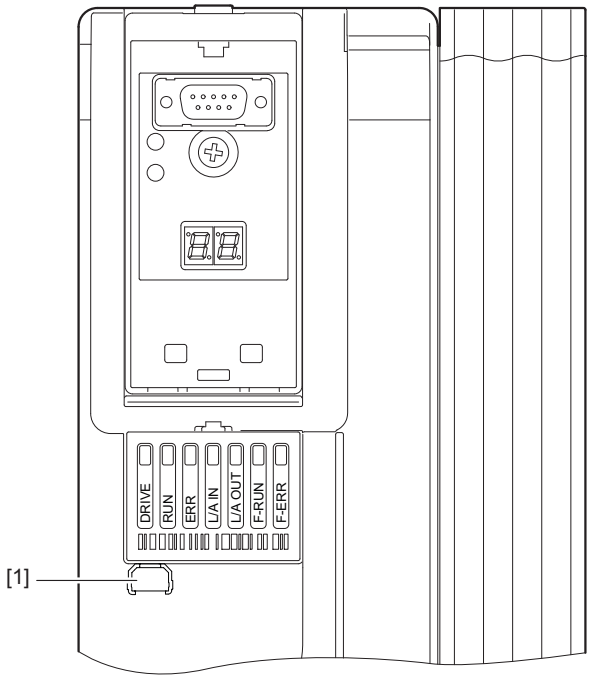

32536703371

[1] Memory module

All device data is always stored up-to-date on the memory module. If a device needs to be replaced, the system can be started up again in next to no time without additional tools by simply removing the memory module from the old device and plugging it into the replacement.

The memory module can be simply removed or plugged in when it is switched off.

If a device variant with functional safety is used, the memory module also serves as a safety key.

Type designation	Part number
CMM11A memory module	28230760

4.16 CDM11A diagnostic module

4.16.1 Description

The CDM11A diagnostic module is the interface to the MOVISUITE® engineering software. The module contains two 7-segment displays for displaying the device status. The module is required to use the CBG11A, CBG21A, and CBG22A keypads.

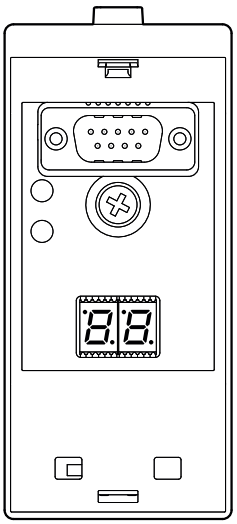

CDM11A properties:

- 2-digit 7-segment display
- Output of fault codes and status
- Engineering interface

4.16.2 Technical data

INFORMATION

The CDM11A diagnostic module can only be plugged directly onto the inverter.

CDM11A diagnostic module	
Power consumption	0.25 W
Dimensions in mm (W × H × D)	46 × 100 × 20
Screen type	2-digit 7-segment display
Engineering interface	D-sub, 9-pin
Part number	28265092

33955948/EN – 05/2026

4.17 CBG01A keypad

4.17.1 Description

The CBG01A keypad enables operation, parameterization, and output of fault codes for the inverters. The keypad is connected directly to the basic device.

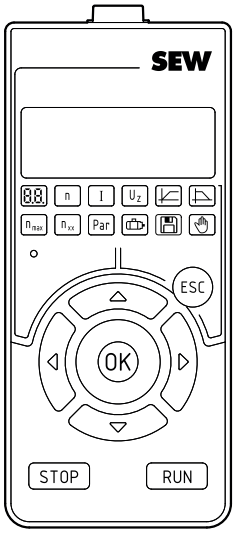

CBG01A properties:

- 5-digit, 7-segment display
- Output of fault codes, status and operating state
- Startup of asynchronous motors:
  - With or without brake (firmware 2.00 or higher)
  - With or without temperature sensors (firmware 3.10 or higher)
  - Without encoder
- Simple diagnostics
- Saving and copying a parameter set
- Language: none (7-segment display)

For more information, refer to the "Keypad CBG01A" manual.

4.17.2 Technical data

CBG01A keypad	
Ambient temperature	0 to 60 °C
Degree of protection	IP40 in accordance with EN 60529
Power consumption	0.25 W
Dimensions in mm (W × H × D)	45 × 100 × 19
Screen type	5-digit 7-segment display
Part number	28269993

33955948/EN – 05/2026

4.18 CBG11A keypad

4.18.1 Description

The keypad enables convenient startup, operation, parameterization, and diagnostics of inverters of the MOVI-C® modular automation system due to the full-text display.

The keypad has a mini USB interface with gateway function. A connection from the inverter to a PC can be established using this interface for engineering with MOVISUITE®.

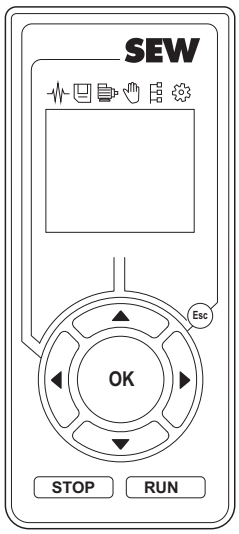

Properties of CBG11A:

- 38 mm monochrome display (1.5")
- Startup of asynchronous motors:
  - With or without brake
  - With or without temperature sensors
  - Without encoder
- Diagnostics
- Saving and copying a parameter set
- Firmware update of the inverter via USB connection
- Connection to MOVISUITE® engineering software via keypad
- Determination of load moment of inertia
- Access to all parameters
- Language: EN

The CDM11A diagnostic module is required to plug the keypad directly onto the inverter.

The keypad can either be plugged directly onto the inverter or used remotely. A COG11A door mounting frame is available for using the keypad remotely on a control panel or control cabinet door. In this case, the UKS22A cable is also required.

4.18.2 Technical data

CBG11A keypad	
Part number	28233646
Ambient temperature	0 – 60 °C
Degree of protection	IP40 according to EN 60529
Power consumption	0.6 W
Dimensions in mm (W × H × D)	45 × 100 × 20
Display dimensions in mm (W × H)	28.5 × 23
Diagonal screen measurement	38 mm (1.5")
Screen resolution in pixels (W × H)	78 × 64
Screen type	Monochrome display
Engineering interface	USB 2.0 mini B, female
Connection interface	D-sub 9-pin, female

33955948/EN – 05/2026

CBG11A keypad	
Mechanical strength	3M5 according to DIN EN 60721-3-3: 1995 5M1 according to DIN EN 60721-3-5: 1997

4.19 CBG21A keypad

4.19.1 Description

The keypad enables convenient startup, operation, parameterization, and diagnostics of inverters of the MOVI-C® modular automation system due to the full-text display.

The keypad has a mini USB interface with gateway function. A connection from the inverter to a PC can be established using this interface for engineering with MOVISUITE®.

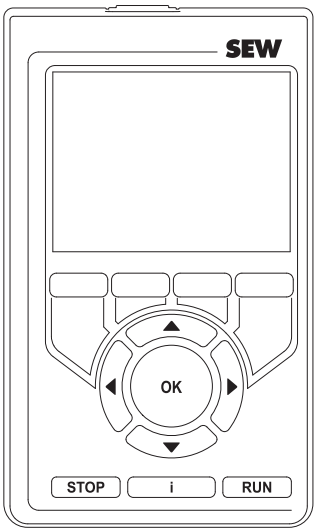

Properties of CBG21A:

- 61 mm color display (2.4")
- Startup of asynchronous and synchronous motors:
  - With or without brake
  - With or without temperature sensors
  - with or without encoder
- Diagnostics
- Saving and copying several parameter sets
- Firmware update of the inverter via USB connection
- Connection to MOVISUITE® engineering software via keypad
- Determination of load moment of inertia
- Optimization of the drive train in terms of backlash and stiffness
- Access to all parameters
- Languages: DE/EN/FR/IT/ES/KO/PT/HU/ZH/RU

The CDM11A diagnostic module is required to plug the keypad directly onto the inverter.

The keypad can either be plugged directly onto the inverter or used remotely. A COG11A door mounting frame is available for using the keypad remotely on a control panel or control cabinet door. In this case, the UKS22A cable is also required.

33955948/EN – 05/2026

4.19.2 Technical data

CBG21A keypad	
Part number	28238133
Ambient temperature	-10 – 60 °C
Degree of protection	IP40 in accordance with EN 60529
Power consumption	1.4 W
Dimensions in mm (W × H × D)	65 × 110 × 20
Display dimensions in mm (W × H)	49 × 37
Diagonal screen measurement	61 mm (2.4")
Screen resolution in pixels (W × H)	320 × 240
Screen type	Color display
Engineering interface	USB 2.0 mini B, female
Connection interface	D-sub 9-pin, female
Mechanical strength	3M5 according to DIN EN 60721-3-3: 1995 5M1 according to DIN EN 60721-3-5: 1997
Internal memory	128 MB (sufficient for several hundred data sets) The memory can also be used for images, documents, projects, etc.

33955948/EN – 05/2026

4.20 CBG22A local keypad

4.20.1 Description

The full-text display of the local keypad enables a convenient display of customer-specific information texts of the higher-level controller. It also enables the operator to perform diagnostics and manual operation.

The local keypad has a mini USB interface with gateway function. A connection from the inverter to a PC can be established using this interface for engineering with MOVISUITE®.

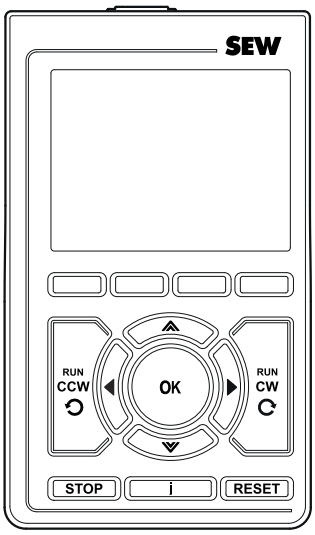

Properties of CBG22A:

- 61 mm color display (2.4")
- Display of customer-specific information texts of the higher-level controller, diagnostics, and manual mode by the operator
- Simple and intuitive manual mode[1)] for continued operation in the event of a system failure
- Comprehensive diagnostics methods
- Read-only access to parameters as security against incorrect use
- Data transfer and optional access to functions and states of the control elements for Ethernet-based communication methods of the drive systems
- Connection to MOVISUITE® engineering software via keypad
- Languages: DE/EN/FR/ES/PT/ZH/RU

1) Only in combination with devices with key switch

The CDM11A diagnostic module is required to plug the keypad directly onto the inverter.

The CBG22A local keypad can either be plugged directly onto the inverter or used remotely. The COG11A door mounting frame is available for using the keypad remotely on a control panel or control cabinet door. In this case, the UKS52A cable is also required. If the CBG22A local keypad is plugged directly onto the inverter, manual mode cannot be used.

4.20.2 Technical data

CBG22A local keypad	
Part number	28277554
Ambient temperature	-10 – 60 °C
Degree of protection	IP40 in accordance with EN 60529
Power consumption	1.4 W
Dimensions in mm (W × H × D)	65 × 110 × 20
Display dimensions in mm (W × H)	49 × 37
Diagonal screen measurement	61 mm (2.4")
Screen resolution in pixels (W × H)	320 × 240
Screen type	Color display

33955948/EN – 05/2026

CBG22A local keypad	
Engineering interface	USB 2.0 mini B, female
Connection interface	D-sub 9-pin, female
Mechanical strength	3M5 according to DIN EN 60721-3-3: 1995 5M1 according to DIN EN 60721-3-5: 1997

4.21 COG11A door mounting frame

4.21.1 Description

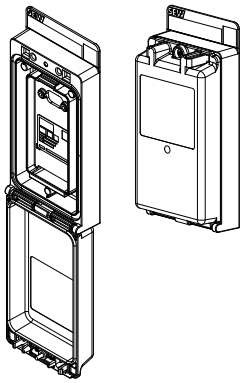

The COG11A door mounting frame allows the CBG11A, CBG21A, and CBG22A keypads to be used remotely from the inverter, e.g. on the control cabinet door or an operating panel.

The UKS22A and UKS52A prefabricated cables are required for the connection between the COG11A and the inverter and must be ordered separately.

4.21.2 Technical data

Door mounting frame COG11A	
Part number	28265688
Purpose of use	Door mounting frame for the following keypads: • CBG11A, part number 28233646 • CBG21A, part number 28238133 • CBG22A, part number 28277554
Scope of delivery	• COG11A (door mounting frame with cover) • Seal • Drilling template • 3 screws Ø 4 mm × 16 mm
Connection	D-sub connector, 9-pin, female
Protection class	IP65 with tightening torque of 1.2 – 1.4 Nm for the cover screw Enclosure UL Type I
Dimensions in mm (H × W × D)	• Closed: 169 × 79.6 × 42 • Open: 315 × 79.6 × 29

33955948/EN – 05/2026

Door mounting frame COG11A	
Maximum metal thickness of the control cabinet door	7 mm
Space required to open the cover	200 mm

For further information, refer to the installation instructions "Door mounting frame COG11A".

Prefabricated cables

Only use cables provided by SEW-EURODRIVE. Use the UKS22A cable for the CBG11A and CBG21A keypads. The UKS52A cable also has a contact for a switch or key switch. As long as this contact is not closed, the inverter cannot be operated in manual mode with the CBG22A keypad. This allows the CBG22A keypad to be locked against unauthorized access.

Length	Part number	Type
5 m	25721763	UKS22A
Variable, 1 – 10 m[1)]	28149963	UKS52A[2)]
2 m	28152751	
5 m	28152646	
10 m	28156870	

1) In 1 m increments.

2) A port saver is required for this cable type. This is included in the scope of delivery.

33955948/EN – 05/2026

4.22 USM21A interface adapter

4.22.1 Description

The USM21A interface adapter is used to connect a PC to the X32 service interface of the CDM11A diagnostic module on the inverter.

The following figure shows the USM21A interface adapter:

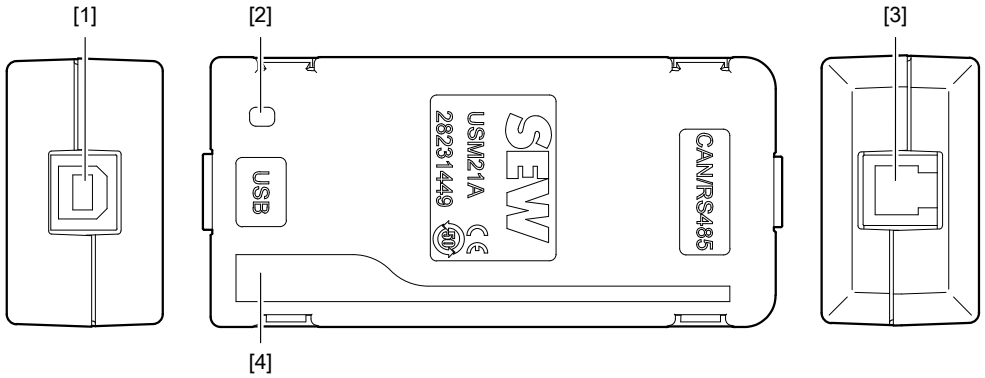

18014432680689163

[1] USB socket type B
[2] Bus status display
[3] RJ10 socket
[4] Interface adapter status display

4.22.2 Technical data

USM21A interface adapter	
Part number	28231449
Interference immunity	Complies with EN 61800-3
Ambient temperature	0 – 40 °C
Storage temperature	-25 – 70 °C according to EN 60721-3-3, class 3K3
Degree of protection	IP20 in accordance with EN 60529
Interfaces	RJ10 socket (device connection) USB socket type B (PC connection)
Mass	200 g
Dimensions in mm (L × W × H)	92.5 × 43 × 25

An order using part number 28231449 includes the following parts:

- USM21A interface adapter
- USB connection cable for the USM21A – PC connection
- Serial interface cable with 2 RJ10 connectors

33955948/EN – 05/2026

INFORMATION

To connect the inverter to the USM21A, you need an additional serial interface cable with an RJ10 connector and a 9-pin D-sub connector, part number 18123864.

This cable must be ordered separately.

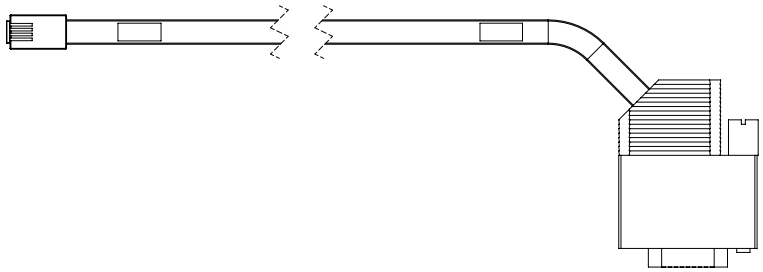

26663013387

The CDM11A diagnostic module is required to connect the inverter to the USM21A interface adapter.

4.23 CLH21A shield plate extension

The CLH21A shield plate extension (mounting rail on a standard shield plate) is used to mount additional terminal blocks or modules on the inverter shield plate. The brake rectifier from SEW-EURODRIVE or a multi-level terminal block, for example, can be attached to the CLH21A shield plate extension. This offers the following benefits:

- No additional hat rail required for terminal blocks or modules.
- No additional control cabinet space required, as direct stacking of inverters is still possible.
- Easy wiring of terminal blocks or modules thanks to optimal cable routing.

33955948/EN – 05/2026

The shield plate extension is used with the inverters of size 0S and 0L (part number CLH21A: 28265572).

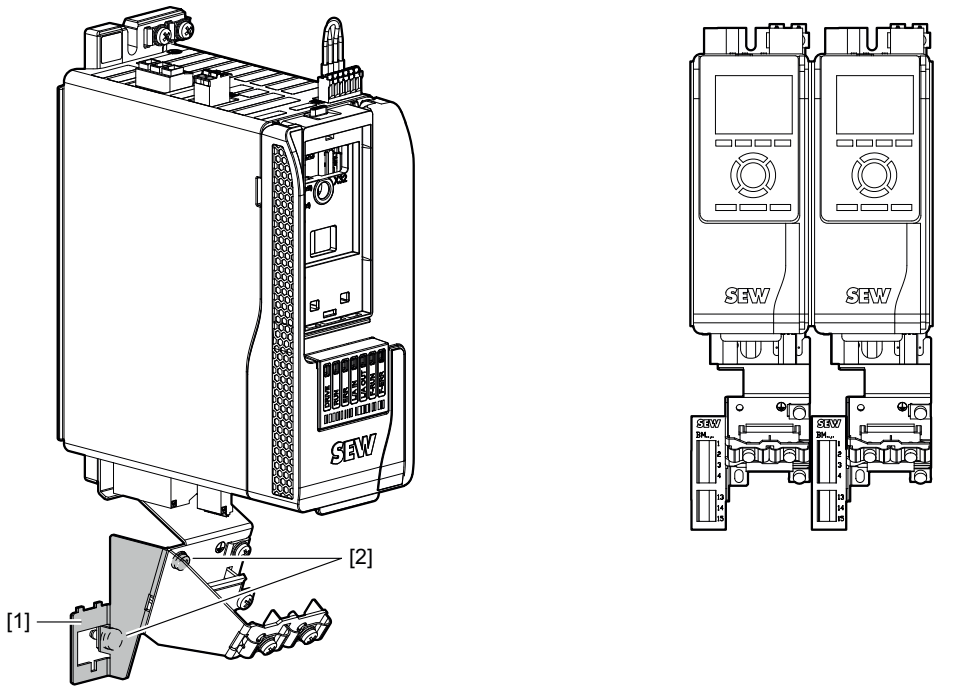

18014434411886603

[1] Shield plate extension
[2] Retaining screws

4.24 CLH31A and CLH41A support plates with braking resistors

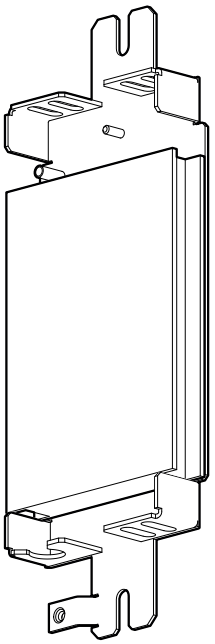

The CLH31A and CLH41A support plates with integrated braking resistors offer a space-saving solution for storing small braking resistors in the control cabinet. The assignment to the inverters can be found in chapter "Technical data and assignment to an inverter" (→ 🗎 90).

33955948/EN – 05/2026

4.25 CLH51A and CLH61A support plates for mounting rail installation

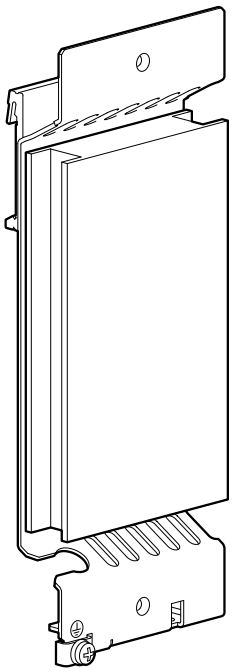

The CLH51A and CLH61A support plates with integrated braking resistors offer a space-saving solution for storing small braking resistors in the control cabinet. In addition, the support plates CLH51A and CLH61A can be used to mount the inverter on a DIN EN 60715 mounting rail (35 mm × 7.5 mm) in the control cabinet. The two support plates are each available with and without mounted braking resistor:

- CLH51A without braking resistor: Part number 28290097
- CLH61A without braking resistor: Part number 28290143

The assignment to the inverters can be found in chapter "Technical data and assignment to an inverter" (→ 🗎 90).

4.26 BW../BW..-T braking resistors

4.26.1 Description

The BW../BW..-T braking resistors are adapted to the technical characteristics of the inverter. Braking resistors with different continuous and peak braking powers are available.

The braking resistors can be protected against overload and overtemperature by the customer when a thermal overload relay is used. The tripping current is set to the value I_F. For further information, refer to chapter "Technical data and assignment to an inverter" (→ 🗎 90).

A flat-type resistor has internal thermal protection (fuse cannot be replaced) that interrupts the current circuit in the event of overload. The configuration guidelines and the documented assignments of the drive inverter and braking resistor must be adhered to.

A PTC braking resistor protects itself (reversible) against regenerative overload by changing abruptly to high resistance and no longer consuming any more energy. The inverter then switches off and signals an "overvoltage" fault.

INFORMATION

Use only the following protection devices:

- Internal temperature switch T
- External thermal overload relay

→ Further information can be found in the chapter "Protecting braking resistors against thermal overload" (→ 🗎 345).

33955948/EN – 05/2026

4.26.2 Connecting braking resistors in parallel

It is permitted to connect several identical braking resistors in parallel. In that case, the following applies:

- Connect the power connections of the braking resistors to +R and -R in parallel.
- Pay attention to the minimum permitted braking resistance value R_{BRmin} when connecting braking resistors in parallel.
- For BW.. braking resistors, each braking resistor requires separate protection against thermal overload, e.g. an external thermal overload relay.
- For BW..-T braking resistors (T = with integrated temperature switch), the signal contacts (NC contacts) must be connected in series.

4.26.3 Technical data and assignment to an inverter

Technical data

Braking resistor		Unit	BW120-001	BW100-002/M	BW100-001	BW100-002	BW100-006-T	BW168-T	BW268-T
Part number		–	18176011	25664514	08281718	08281653	18204198	18201334	18204171
Peak braking power		kW	6.9	9.4	6.9			10	
Current-carrying capacity	100% cdf	kW	0.03	0.15	0.1	0.15	0.6	0.8	1.2
	50% cdf	kW	0.06	0.3	0.15	0.3	1.1	1.4	2.2
	25% cdf	kW	0.1	0.45	0.3	0.6	1.9	2.6	3.8
	12% cdf	kW	0.18	0.75	0.5	1	3.6	4.8	7.2
	6% cdf	kW	0.3	1.2	0.9	1.8	5.7	7.6	10
	Observe the regenerative power limit of the device, see chapter "Technical data" (→ 🗎 44).								
Resistance value R_{BR}		Ω	117	100 ± 10%	100	100 ± 10%		68 ± 10%	
Tripping current of external monitoring device I_F [1]		A	–	1.2	0.8	1	2.4	3.4	4.2
Design		–	PTC braking resistor in the housing	Flatpack resistor in the housing	Flatpack resistor		Wire resistor		
Power connections		mm^2	Single conductors				Screw terminal		
Conductor length at the braking resistor		mm	170	300	510	510	–		
Cable cross section		mm^2	0.5	2.1	1.3		0.5 – 10		
Tightening torque		Nm	–				1.7 [2]		
PE connection		–	–				M4 bolt		
Tightening torque PE		Nm	–				1.7 [2]		
Degree of protection in accordance with EN 60529		–	IP20	IP40	IP54	IP54	IP20		
Ambient temperature ϑ_A		°C	-20 – 40		-25 – 40		-30 – 40		
Derating at ambient temperature > 40 °C		–	-4% P_N/10 K up to maximum 60 °C						
Thermal overload protection		–	Self-protection	Fuse			Temperature switch		
Noise characteristics		–	Unobtrusive				Low		
Mass		kg	0.95	1.7	0.3	0.6	3	4	4.9

1) The tripping current must be reduced by 2% / 10 K at an ambient temperature above 40 °C.

2) Adhere to the specified tightening torques with a tolerance of +/- 10%.

33955948/EN – 05/2026

Assignment

The assignment considers the maximum possible peak braking power of the inverter.

Braking resistor	BW120-001	BW100-002/ M	BW100-001	BW100-002	BW100-006-T	BW168-T	BW268-T
MCX91A-....-5.3..	0010 – 0055	0010 – 0055				–	–
MCX91A-....-2.3..	–	–	–	–	–	0017 – 0055	
MCX91A-....-2.1..	–	–	–	–	–	0017 – 0055	

Technical data

Braking resistor		Unit	BW047-010-T	BW147-T	BW247-T
Part number		–	17983207	18201342	18200842
Peak braking power		kW	14.6		
Current-carrying capacity	100% cdf	kW	1	1.2	2
	50% cdf	kW	1.8	2.2	3.6
	25% cdf	kW	3.2	3.8	6.4
	12% cdf	kW	6	7.2	12
	6% cdf	kW	9.5	11.4	19
	Observe the regenerative power limit of the inverter, see chapter "Technical data" (→ 🗎 44).				
Resistance value R_{BR}		Ω	47 ± 10%		
Tripping current of external monitoring device I_F [1]		A	4.6	5.1	6.5
Design		–	Wire resistor		
Power connections		–	Screw terminal		
Cable cross section		mm^2	0.5 – 10		
Tightening torque		Nm	1.7 [2]		
PE connection		–	M4 bolt		
Tightening torque PE		Nm	1.7 [2]		
Degree of protection in accordance with EN 60529		–	IP20		
Ambient temperature ϑ_A		°C	-30 – 40		
Derating at ambient temperature > 40 °C			-4% P_N/10 K up to maximum 60 °C		
Thermal overload protection		–	Temperature switch		
Noise characteristics		–	Low		
Mass		kg	4	4.9	6.7

1) The tripping current must be reduced by 2% / 10 K at an ambient temperature above 40 °C.

2) Adhere to the specified tightening torques with a tolerance of +/- 10%.

Assignment

The assignment considers the maximum possible peak braking power of the inverter.

Braking resistor	BW047-010-T	BW147-T	BW247-T
MCX91A-....-5.3..	0070 0095 0125		
MCX91A-....-2.3..	–	–	–
MCX91A-....-2.1..	–	–	–

Technical data

Braking resistor		Unit	BW027-016-T	BW027-024-T	BW027-042-T
Part number		–	17983215	17983231	19155301
Peak braking power		kW	25.4		
Current-carrying capacity	100% cdf	kW	1.6	2.4	4.2
	50% cdf	kW	2.9	4.3	7.6
	25% cdf	kW	5.1	7.7	13.3
	12% cdf	kW	9.6	14.4	23.9
	6% cdf	kW	15.2	22.8	25.4
	Observe the regenerative power limit of the device, see chapter "Technical data" (→ 🗎 44).				
Resistance value R_{BR}		Ω	27 ±10%		
Tripping current of external monitoring device I_F [1]		A	7.7	9.4	12.5
Design		–	Wire resistor		Frame resistor
Power connections		–	Screw terminal		
Cable cross section		mm^2	0.5 – 10		Max. 4
Tightening torque		Nm	1.7 [2]		1.8 [2]
PE connection		–	M4 bolt		M5 bolt
Tightening torque PE		Nm	1.7 [2]		2.3 [2]
Degree of protection in accordance with EN 60529		–	IP20		
Ambient temperature ϑ_{amb}		°C	-30 – 40		
Derating at ambient temperature > 40 °C		–	-4% P_N/10 K up to maximum 60 °C		
Thermal overload protection		–	Temperature switch		
Noise characteristics		–	Low		
Mass		kg	5.8	8	10

1) The tripping current must be reduced by 2% / 10 K at an ambient temperature above 40 °C.
2) Adhere to the specified tightening torques with a tolerance of +/- 10%.

Assignment

The assignment considers the maximum possible peak braking power of the inverter.

Braking resistor	BW027-016-T	BW027-024-T	BW027-042-T
MCX91A-....-5.3..	0160 0240		
MCX91A-....-2.3..	0070 0093	0093	–
MCX91A-....-2.1..	0070 0093	0093	–

33955948/EN – 05/2026

Technical data

Braking resistor		Unit	BW015-016	BW015-042-T	BW015-075-T	BW915-T
Part number		–	17983258	19155328	19155271	18204139
Peak braking power		kW	45.7			
Current-carrying capacity	100% cdf	kW	1.6	4.2	7.5	16
	50% cdf	kW	2.9	7.6	12.8	27.2
	25% cdf	kW	5.1	13.3	22.5	45.7
	12% cdf	kW	9.6	23.9	33.8	45.7
	6% cdf	kW	15.2	41.8	45.7	45.7
	Observe the regenerative power limit of the device, see chapter "Technical data" (→ 🗎 44).					
Resistance value R_{BW}		Ω	15 ±10%			
Tripping current of external monitoring device I_F [1]		A	10.3	16.7	22.4	32.7
Design		–	Wire resistor	Frame resistor	Grid resistor mounting position 1	
Power connections		–	Screw terminal		M8 bolt	
Cable cross section		mm^2	0.5 – 10	Max. 4	5 – 6	
Tightening torque		Nm	1.5 – 1.8	Max. 2	6	
PE connection		–	M4 bolt	M5 bolt	M6 bolt	
Tightening torque PE		Nm	1.5 – 1.8	2 – 2.5	2.5 – 3	
Degree of protection according to EN 60529		–	IP20			
Ambient temperature ϑ_{amb}		°C	-30 – 40			
Derating at ambient temperature > 40 °C		–	-4% P_N/10 K up to maximum 60 °C			
Thermal overload protection		–	–	Temperature switch		
Noise characteristics		–	Low		Pronounced	
Mass		kg	5.8	10	12	32

1) The tripping current must be reduced by 2% / 10 K at an ambient temperature above 40 °C.

Assignment

The assignment considers the maximum possible peak braking power of the inverter.

Braking resistor	BW015-016	BW015-042-T	BW015-075-T	BW915-T
MCX91A-....-5.3..	0320 0460 0750 (Parallel connection of 2 braking resistors) 0910 (Parallel connection of 2 braking resistors)			
MCX91A-....-2.3..	0140 0213 0290 (Parallel connection of 2 braking resistors) 0420 (Parallel connection of 2 braking resistors)		–	–
MCX91A-....-2.1..	0110		–	–

33955948/EN – 05/2026

Technical data

Braking resistor		Unit	BW010-024	BW010-050-T	BW010-108-T
Part number		–	17983266	17983274	19155298
Peak braking power		kW	57.2		
Current-carrying capacity	100% cdf	kW	2.4	5	10.8
	50% cdf	kW	4.3	8.5	18.4
	25% cdf	kW	7.7	15.0	32.4
	12% cdf	kW	14.4	22.5	48.6
	6% cdf	kW	22.8	38.0	57.2
	Observe the regenerative power limit of the device, see chapter "Technical data" (→ 🗎 44).				
Resistance value R_{BW}		Ω	10 ±10%		
Tripping current of external monitoring device I_F [1]		A	15.5	22.4	32.9
Design		–	Wire resistor	Grid resistor mounting position 1	
Power connections		–	Screw terminal	M8 bolt	
Cable cross section		mm^2	0.5 – 10	–	
Tightening torque		Nm	1.5 – 1.8	5 – 6	
PE connection		–	M4 bolt	M6 bolt	
Tightening torque PE		Nm	1.5 – 1.8	2.5 – 3	
Degree of protection according to EN 60529		–	IP20		
Ambient temperature ϑ_{amb}		°C	-30 – 40		
Derating at ambient temperature > 40 °C		–	-4% P_N/10 K up to maximum 60 °C		
Thermal overload protection		–	Overload relay	Temperature switch	
Noise characteristics		–	Low	Pronounced	
Mass		kg	8	12	17.5

1) The tripping current must be reduced by 2% / 10 K at an ambient temperature above 40 °C.

Assignment

The assignment considers the maximum possible peak braking power of the inverter.

Braking resistor	BW010-024	BW010-050-T	BW010-108-T
MCX91A-....-5.3..	0620 1130 (Parallel connection of 2 braking resistors)		
MCX91A-....-2.3..	0570 (Parallel connection of 2 braking resistors)		–

33955948/EN – 05/2026

Technical data

Braking resistor		Unit	BW006-025-01[1]	BW006-050-01[1]	BW106-T	BW206-T
Part number		–	18200117	18200125	18200834	18204120
Peak braking power		kW	114.3			
Current-carrying capacity	100% cdf	kW	2.5	5	13.5	18
	50% cdf	kW	4.3	8.5	23.0	30.6
	25% cdf	kW	7.5	15.0	40.5	54.0
	12% cdf	kW	11.3	22.5	60.8	81.0
	6% cdf	kW	19.0	38.0	102.6	114.3
	Observe the regenerative power limit of the device, see chapter "Technical data" (→ 🗎 44).					
Resistance value R_{BW}		Ω	5.8 ±10%		6 ±10%	
Tripping current of external monitoring device I_F[2]		A	20.4	28.9	47.4	54.8
Design		–	Grid resistor mounting position 1			
Power connections		–	M8 bolt			
Tightening torque		Nm	5 – 6			
PE connection		–	M6 bolt			
Tightening torque PE		Nm	2.5 – 3			
Degree of protection according to EN 60529		–	IP20			
Ambient temperature ϑ_{amb}		°C	-30 – 40			
Derating at ambient temperature > 40 °C		–	-4% P_N/10 K up to maximum 60 °C			
Thermal overload protection		–	Overload relay		Temperature switch	
Noise characteristics		–	Pronounced		Unobtrusive	
Mass		kg	7.5	12	30	40

1) The braking resistor has a 1 Ω tap.

2) The tripping current must be reduced by 2% / 10 K at an ambient temperature above 40 °C.

Assignment

The assignment considers the maximum possible peak braking power of the inverter.

Braking resistor	BW006-025-01	BW006-050-01	BW106-T	BW206-T
MCX91A-....-5.3..	0750 0910 1490 (Parallel connection of 2 braking resistors) 1770 (Parallel connection of 2 braking resistors)			
MCX91A-....-2.3..	–	0840 (Parallel connection of 2 braking resistors)		–

33955948/EN – 05/2026

Technical data

Braking resistor		Unit	BW005-070	BW005-170-T	BW004-050-01	BW004-070-01
Part number		–	17983282	17983290	18200133	17967678
Peak braking power		kW	146		190.6	
Current-carrying capacity	100% cdf	kW	7	17	5	7
	50% cdf	kW	11.9	28.9	8.5	11.9
	25% cdf	kW	21.0	51.0	15.0	21.0
	12% cdf	kW	31.5	76.5	22.5	31.5
	6% cdf	kW	53.2	129.2	38.0	53.2
	Observe the regenerative power limit of the device, see chapter "Technical data" (→ 🗎 44).					
Resistance value R_{BW}		Ω	4.7 ±10%		3.6 ±10%	
Tripping current of external monitoring device I_F [1]		A	38.6	60.1	37.3	44.1
Design		–	Grid resistor mounting position 1			
Power connections		–	M8 bolt			
Tightening torque		Nm	5 – 6			
PE connection		–	M6 bolt			
Tightening torque PE		Nm	2.5 – 3			
Degree of protection according to EN 60529		–	IP20			
Ambient temperature ϑ_{amb}		°C	-30 – 40			
Derating at ambient temperature > 40 °C		–	-4% P_N/10 K up to maximum 60 °C			
Thermal overload protection		–	Overload relay	Temperature switch	Overload relay	
Noise characteristics		–	Pronounced			
Mass		kg	13	33	12	13

1) The tripping current must be reduced by 2% / 10 K at an ambient temperature above 40 °C.

Assignment

The assignment considers the maximum possible peak braking power of the inverter.

Braking resistor	BW005-070	BW005-170-T	BW004-050-01	BW004-070-01
MCX91A-....-5.3..	1130 2200 (Parallel connection of 2 braking resistors) 2500 (Parallel connection of 2 braking resistors) 3000 (Parallel connection of 2 braking resistors)		1490 1770	
MCX91A-....-2.3..	0570 1080 (Parallel connection of 2 braking resistors)	1080 (Parallel connection of 2 braking resistors)	0840	

33955948/EN – 05/2026

Technical data

Braking resistor		Unit	BW003-420-T	BW002-070
Part number		–	13302345	17983304
Peak braking power		kW	274.4	298.3
Current-carrying capacity	100% cdf	kW	42	7
	50% cdf	kW	71.4	11.9
	25% cdf	kW	126.0	21.0
	12% cdf	kW	189.0	31.5
	6% cdf	kW	274.4	53.2
	Observe the regenerative power limit of the device, see chapter "Technical data" (→ 🗎 44).			
Resistance value R_{BR}		Ω	2.5 ± 10%	2.3 ± 10%
Tripping current of external monitoring device I_F [1]		A	129	55.2
Design		–	Grid resistor mounting position 2	Grid resistor mounting position 1
Power connections		–	M12 bolt	M8 bolt
Tightening torque		Nm	14 – 15.5	5 – 6
PE connection		–	M10 bolt	M6 bolt
Tightening torque PE		Nm	8 – 10	2.5 – 3
Degree of protection according to EN 60529		–	IP20	
Ambient temperature ϑ_A		°C	-30 – 40	
Derating at ambient temperature > 40 °C		–	-4% P_N/10 K up to maximum 60 °C	
Thermal overload protection		–	Temperature switch	Overload relay
Noise characteristics		–	Pronounced	
Mass		kg	93	13

1) The tripping current must be reduced by 2% / 10 K at an ambient temperature above 40 °C.

Assignment

The assignment considers the maximum possible peak braking power of the inverter.

Braking resistor	BW003-420-T	BW002-070
MCX91A-....-5.3..	2200 2500 3000 3800 (Parallel connection of 2 braking resistors) 4700 (Parallel connection of 2 braking resistors) 5880 (Parallel connection of 2 braking resistors)	
MCX91A-....-2.3..	1080	

33955948/EN – 05/2026

Technical data

Braking resistor		Unit	BW1.0-170
Part number		–	17985455
Peak braking power		kW	686
Current-carrying capacity	100% cdf	kW	17
	50% cdf	kW	28.9
	25% cdf	kW	51.0
	12% cdf	kW	76.5
	6% cdf	kW	129.2
	Observe the regenerative power limit of the device, see chapter "Technical data" (→ 🗎 44).		
Resistance value R_{BW}		Ω	1 ±10%
Tripping current of external monitoring device I_F [1)]		A	130
Design		–	Grid resistor mounting position 2
Power connections		–	M12 bolt
Tightening torque		Nm	14 – 15.5
PE connection		–	M10 bolt
Tightening torque PE		Nm	8 – 10
Degree of protection according to EN 60529		–	IP20
Ambient temperature ϑ_{amb}		°C	-30 – 40
Derating at ambient temperature > 40 °C		–	-4% P_N/10 K up to maximum 60 °C
Thermal overload protection		–	Overload relay
Noise characteristics		–	Pronounced
Mass		kg	45

1) The tripping current must be reduced by 2% / 10 K at an ambient temperature above 40 °C.

Assignment

The assignment considers the maximum possible peak braking power of the inverter.

Braking resistor	BW1.0-170
MCX91A-....-5.3..	3800 4700 5880

Technical data BW..-T signal contact

Signal contact BW..-T	Unit	General electronics data
Cross section	mm^2	0.75 – 2.5
Tightening torque	Nm	1
Switching capacity	V	DC 2 A / DC 24 V (DC 11) and AC 2 A / AC 230 V (AC 11)
Switch contact (NC contact)	–	according to EN 60730

33955948/EN – 05/2026

Technical data of braking resistors with CLH..A support plate

Braking resistor	Unit	CLH31A/ BW4	CLH31A/ BW2	CLH31A/ BW072-001	CLH31A/ BW100-001	CLH41A/ BW027-001	CLH41A/ BW047-001
Part number	–	28284712	28284720	28284739	28284755	28284747	28284763
Current-carrying capacity at 100% cdf	kW	0.025		0.1			
Resistance value R_{BR}	Ω	88	175	72	100 ±10%	27	47
Tripping current of external monitoring device I_F	A	–	–	0.9	0.8	1.5	1.1
Design	–	PTC		Flatpack resistor			
Power connections	–	Single core					
Core length at the braking resistor	mm	170		510			
Cable cross section	mm^2	0.75		1.5			
Tightening torque	Nm	–	–	–	–	–	–
PE connection	–	–	–	–	–	–	–
Tightening torque PE	Nm	–	–	–	–	–	–
Degree of protection according to EN 60529	–	IP20		IP65			
Ambient temperature ϑ_{amb}	°C	-20 – +40					
Derating at ambient temperature > 40 °C				--4% P_N/10 K up to +80 °C			
Thermal overload protection	–	Self-protection		Fuse			
Noise characteristics	–	Unobtrusive					
Mass	kg	0.08		0.3			

The CLH31A and CLH41A braking resistors with support plate are supplied as a combination of support plate and integrated braking resistor. There is a selection of braking resistors with different ratings for each support plate.

In certain circumstances, braking resistors mounted in the submounting may not reach the current-carrying capacity specified in the table at 100% cdf. The specifications for the nominal power of the inverter can be observed in submounted operation at 4 kHz, 40 °C and 400 V.

Assignment of braking resistors with support plate

Braking resistor	CLH31A/BW4	CLH31A/BW2	CLH31A/ BW072-001	CLH31A/ BW100-001	CLH41A/ BW027-001	CLH41A/ BW047-001
MCX91A-....-5.3..	-	0010 – 0055	–	0010 – 0055	0160	0070 – 0125
MCX91A-....-2.3..	0017 – 0055	–	0017 – 0055	–	0070 – 0140	–
MCX91A-....-2.1..	0017 – 0042	–	0017 – 0042	–	0070 – 0110	–

33955948/EN – 05/2026

Technical data of braking resistors with support plate for mounting rail installation

Braking resistor	Unit	CLH51A/ BW4	CLH51A/ BW2	CLH51A/ BW072-001	CLH51A/ BW100-001	CLH61A/ BW027-001	CLH61A/ BW047-001
Part number	–	28290100	28290119	28290127	28290135	28290151	28290178
Current-carrying capacity at 100% cdf	kW	0.025		0.1			
Resistance value R_{BR}	Ω	88	175	72	100 ±10%	27	47
Tripping current of external monitoring device I_F	A	–	–	0.9	0.8	1.5	1.1
Design	–	PTC		Flatpack resistor			
Power connections	–	Single core					
Core length at the braking resistor	mm	170		510			
Cable cross section	mm^2	0.75		1.5			
Tightening torque	Nm	–	–	–	–	–	–
PE connection	–	–	–	–	–	–	–
Tightening torque PE	Nm	–	–	–	–	–	–
Degree of protection according to EN 60529	–	IP20		IP65			
Ambient temperature ϑ_{amb}	°C	-20 – +40					
Derating at ambient temperature > 40 °C	–	-5% P_N/10 K up to +80 °C					
Thermal overload protection	–	Self-protection					
Noise characteristics	–	Unobtrusive					
Mass	kg	0.08		0.3			

The CLH51A and CLH61A braking resistors with support plate are supplied as a combination of support plate and integrated braking resistor. There is a selection of braking resistors with different ratings for each support plate.

In certain circumstances, braking resistors mounted in the submounting may not reach the current-carrying capacity specified in the table at 100% cdf. The specifications for the nominal power of the inverter can be observed in submounted operation at 4 kHz, 40 °C and 400 V.

Assignment of braking resistors with support plate for mounting rail installation

Braking resistor	CLH51A/BW4	CLH51A/BW2	CLH51A/ BW072-001	CLH51A/ BW100-001	CLH61A/ BW027-001	CLH61A/ BW047-001
MCX91A-....-5.3..	-	0010 – 0055	–	0010 – 0055	0160	0070 – 0125
MCX91A-....-2.3..	0017 – 0055	–	0017 – 0055	–	0070 – 0140	–
MCX91A-....-2.1..	0017 – 0042	–	0017 – 0042	–	0055 – 0110	–

33955948/EN – 05/2026

4.26.4 Dimension drawings and dimensions

Wire resistor

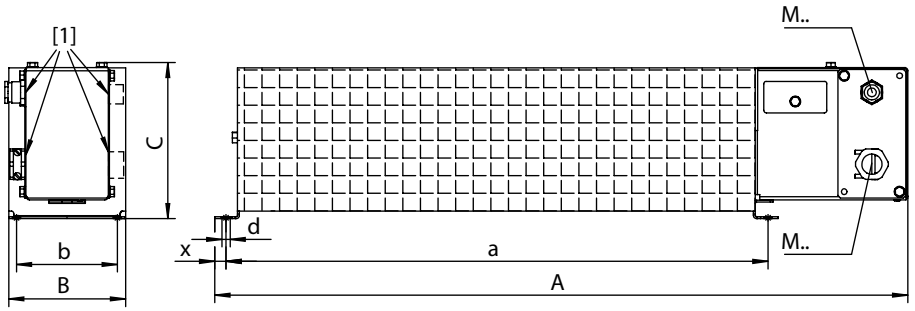

9007218129604875

Brake resistor	Main dimensions in mm			Mounting dimensions in mm				Cable gland
	A	B	C	a	b	d	x	
BW100-006-T	549	92	125	430	80	6.5	8	M25 + M12
BW047-010-T	749	92	125	630	80	6.5	8	M25 + M12
BW147-T	549	185	125	430	150	6.5	8	PG16 + M12
BW247-T	749	185	125	630	150	6.5	8	PG16 + M12
BW027-016-T	649	185	125	530	150	6.5	8	M25 + M12
BW027-024-T	649	275	125	530	240	6.5	8	M25 + M12
BW015-016	649	185	125	530	150	6.5	8	M25
BW010-024	649	275	125	530	240	6.5	8	M25
BW168-T	449	185	120	326	150	6.5	8	M25 + M12
BW268-T	549	185	120	426	150	6.5	8	M25 + M12

Grid resistor mounting position 1

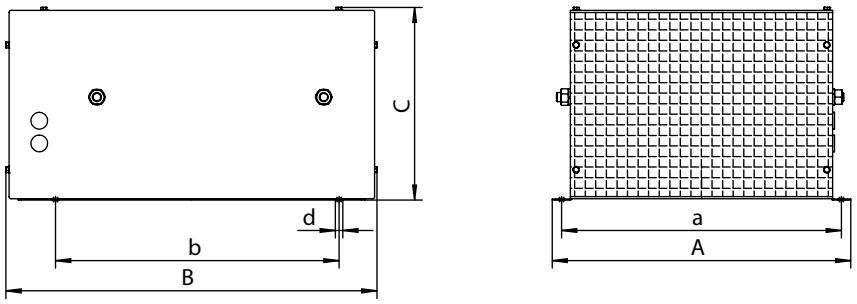

18874868747

Brake resistor	Main dimensions in mm			Mounting dimensions in mm				Cable gland
	A	B	C	a	b	d	x	
BW015-075-T	415	500	270	395	380	9	–	–
BW106-T	795	490	270	770	380	10.5	–	–
BW206-T	995	490	270	970	380	10.5	–	–
BW915-T	795	490	270	770	380	10.5	–	–
BW010-050-T	395	490	260	370	380	10.5	–	–
BW010-108-T	525	500	270	505	380	9	–	–
BW004-050-01	395	490	260	370	380	10.5	–	–
BW005-070	395	490	260	370	380	10.5	–	–
BW002-070	395	490	260	370	380	10.5	–	–
BW005-170-T	490	795	270	380	770	10.5	–	–
BW006-025-01	295	490	260	270	380	10.5	–	–
BW006-050-01	395	490	260	370	380	10.5	–	–

33955948/EN – 05/2026

Grid resistor mounting position 2

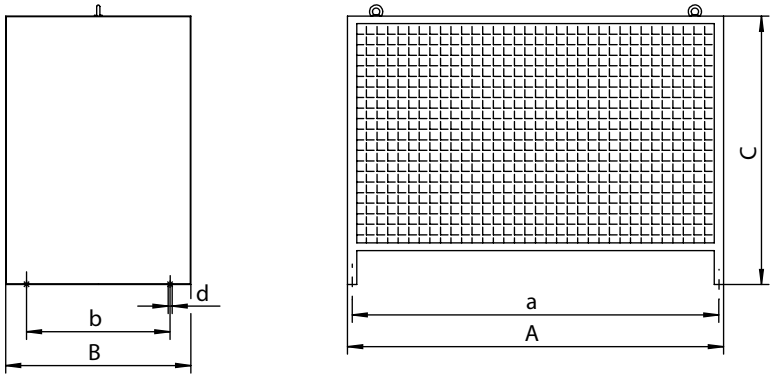

18874876043

Brake resistor	Main dimensions in mm			Mounting dimensions in mm				Cable gland
	A	B	C	a	b	d	x	
BW003-420-T	995	490	710	970	380	10.5	–	–
BW1.0-170	490	795	490	380	770	10.5	–	–

Frame resistor

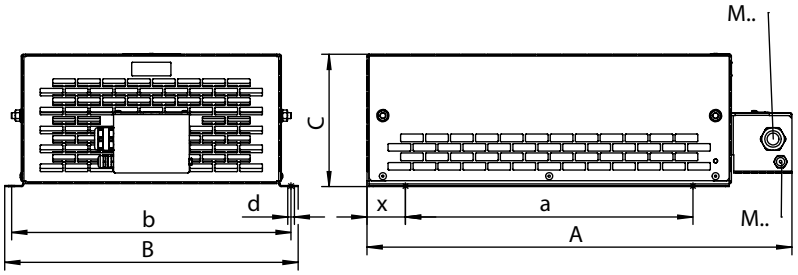

9007218129614603

Brake resistor	Main dimensions in mm			Mounting dimensions in mm				Cable gland
	A	B	C	a	b	d	x	
BW027-042-T	570	390	180	380	370	6.5	55	M25 + M12
BW015-042-T	570	390	180	380	370	6.5	55	M25 + M12

Flat-type resistor

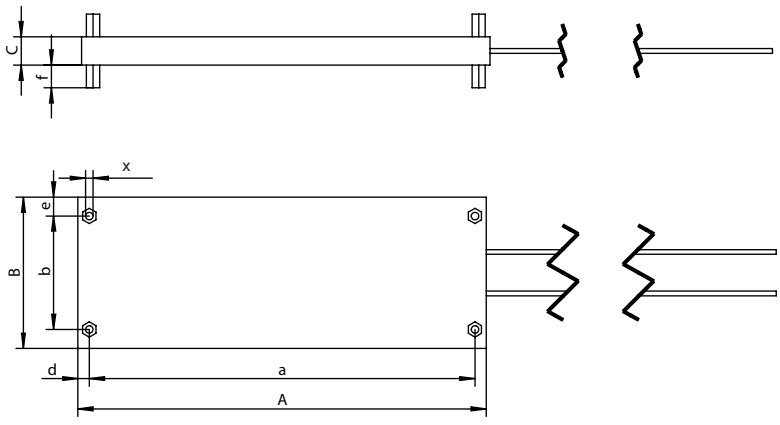

9007218129619467

33955948/EN – 05/2026

Brake resistor	Main dimensions in mm			Mounting dimensions in mm				Connection length in mm
	A	B	C	a	b	d	x	
BW100-001	110	80	15	98	60	–	–	300
BW100-002	216	80	15	204	60	–	–	300

BW120-001 resistor

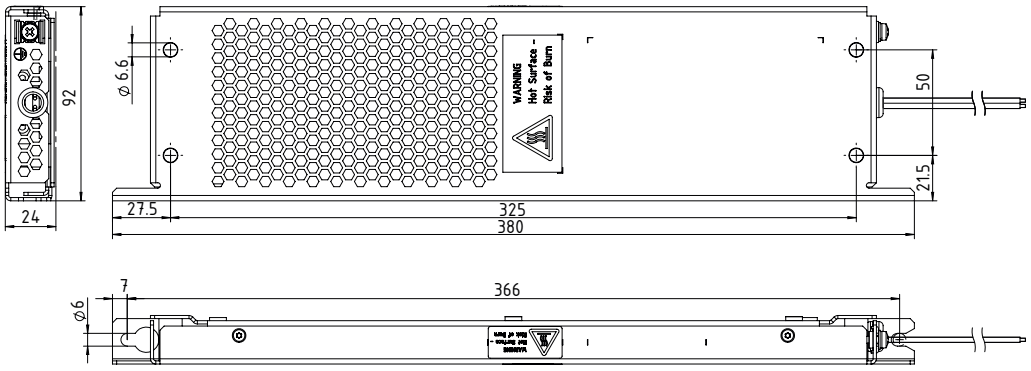

9007218761614219

Length of connections: 130 mm.

BW100-002/M resistor

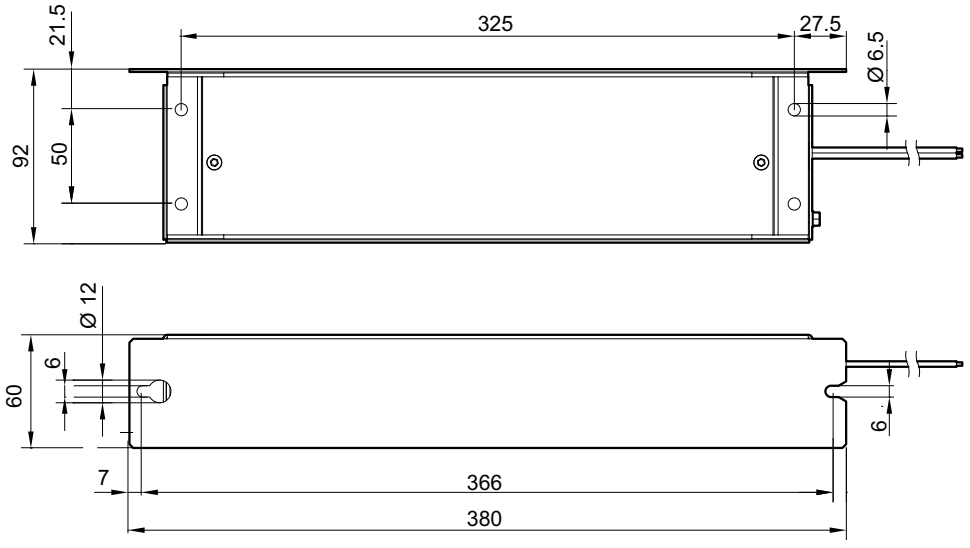

18014432925587851

Braking resistor with CLH..A support plate

CLH31A/CLH41A

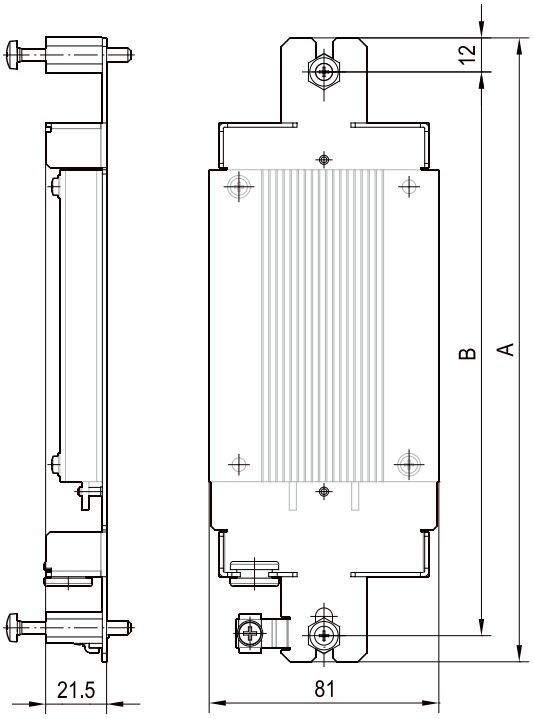

CLH51A/CLH61A

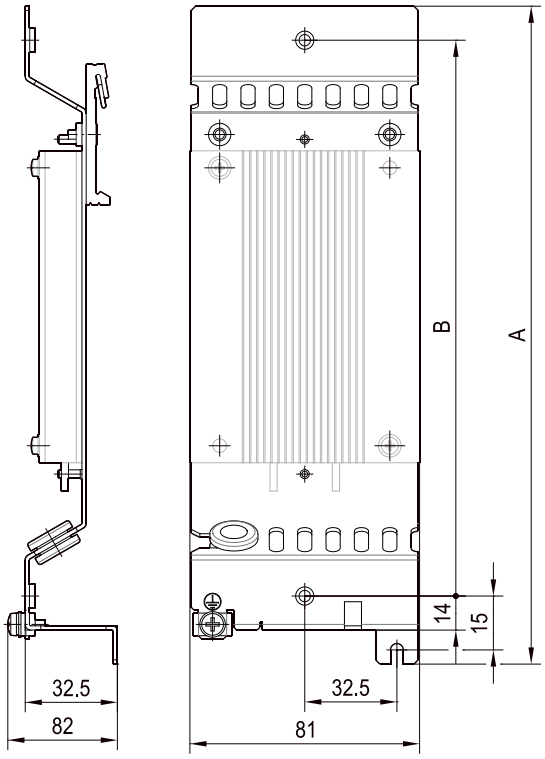

9007242148896651

Braking resistor with support plate	Main dimensions in mm	
	A	B
CLH31A	220	200
CLH41A	310	288
CLH51A with mounting rail installation	232	196
CLH61A with mounting rail installation	318.5	288.5

BS.. touch guard

Description

A BS.. touch guard is available for flatpack resistors.

Touch guard	Part number	Braking resistor
BS003	8131511	BW100-001
BS005	813152X	BW100-002

33955948/EN – 05/2026

Dimension sheet and dimensions

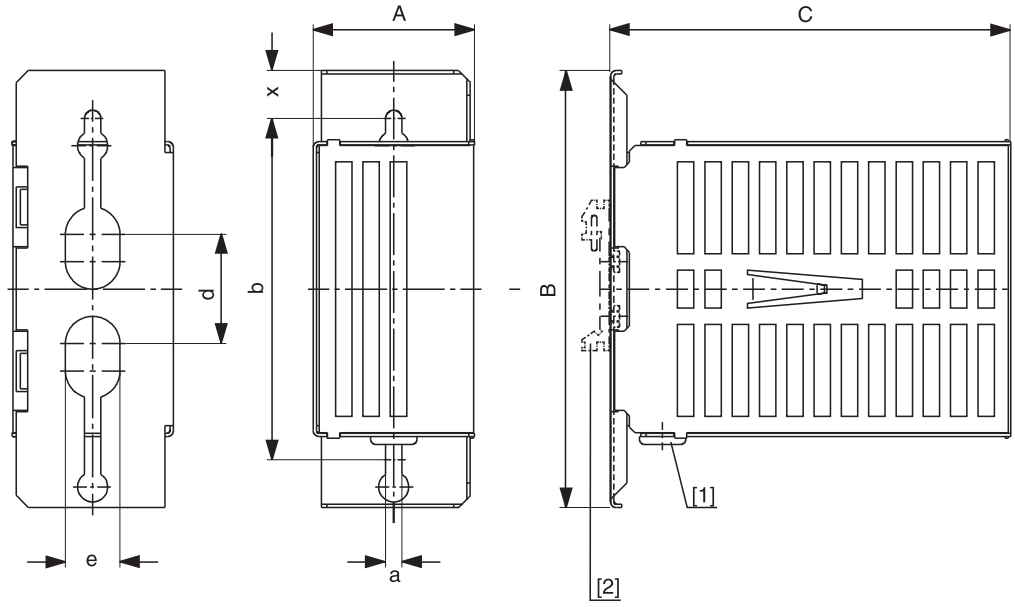

1455849867

[1] Grommet

[2] Mounting rail fastening HS001 for mounting rail installation (can be ordered separately, part number 8221944)

Type	Main dimensions in mm			Mounting dimensions in mm					Mass in kg
	A	B	C	b	d	e	a	x	
BS003	60	160	146	125	40	20	6	17.5	0.35
BS005	60	160	252	125	4	20	6	17.5	0.5

33955948/EN – 05/2026

4.27 NF.. line filter

4.27.1 Description

NF.. line filters are used to suppress electromagnetic interference between the supply system and the device. Line filters may be required to comply with the interference emissions of limit classes according to EN 61800-3.

INFORMATION

No switching is allowed between the NF.. line filter and the device.

4.27.2 Technical data

Line filter	Unit	NF0055-503	NF0120-503	NF0220-503	NF0420-513	NF0910-523	NF1800-523	NF2700-503	NF5400-503
Part number	–	17984319	17984270	17984300	17983789	17987504	17987865	18000576	29655331
Nominal line voltage V_{line} (in accordance with EN 50160)	V	3 × AC 200 – 500							
Line frequency f_{line}	Hz	50 to 60 ± 5%							
Nominal current I_N	A	5.5	12	22	42	91	180	270	540
Nominal power loss	W	4	6	30	30	51.5	89	103	144
Ambient temperature ϑ_A	°C	0 – 45							
Derating at ambient temperature > 45 °C	–	-3% I_N/K up to maximum 60 °C							
Connection contact L1/L2/L3 – L1'/L2'/L3'	–	Spring-loaded terminals			Screw terminal			M12 bolt[1]	
Cross section L1/L2/L3 – L1'/L2'/L3'	mm^2	Max. 6			2.5 – 16	16 – 50	16 – 120	–	
Tightening torque L1/L2/L3 – L1'/L2'/L3'	Nm	–			2 – 4	3.5 – 6	12 – 20	14 to 20	
PE connection contact	–	M4 screw		M5 screw	M6 bolt	M8 bolt	M10 bolt	M12 bolt	
Tightening torque PE	Nm	1.5		3	6	12	23	30	
Degree of protection according to EN 60529	–	IP20						IP00	
Mass	kg	1	1	1.4	3	5	9	13.2	12.5

1) For NF5400-503, each connection is provided in duplicate.

4.27.3 Assignment to an inverter

Line filter	NF0055-503	NF0120-503	NF0220-503	NF0420-513	NF0910-523	NF1800-523	NF2700-503	NF5400-503
MCX91A-....-5.3..	0010 – 0055	0070 – 0125	0160 – 0240	0320 – 0460	0620 – 0910	1130 – 1770	2200 – 3000	3800 – 5880
MCX91A-....-2.3..	0017 – 0055	0070 – 0093	0140 – 0213	0290 – 0420	0570 – 0840	1080	–	–

33955948/EN – 05/2026

4.27.4 Dimension drawings and dimensions

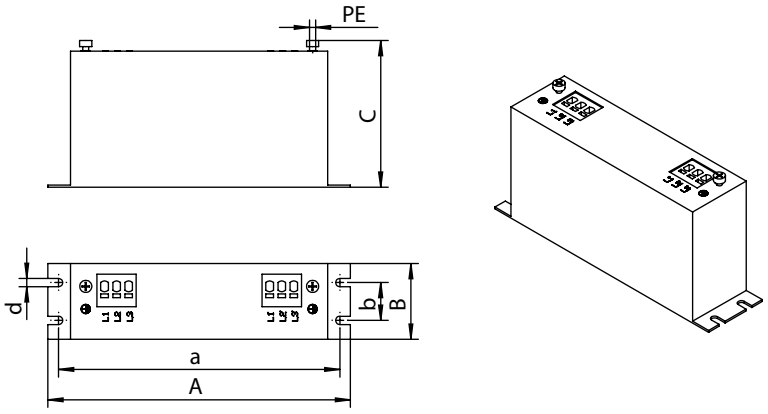

18891135115

Line filter	Main dimensions in mm				Mounting dimensions in mm			Connection
	A	B	C	E	a	b	d	PE
NF0055-503	200	50	97	–	186	25	5.5	M4
NF0120-503	200	50	97	–	186	25	5.5	M4
NF0220-503	230	55	102	–	216	30	5.5	M5

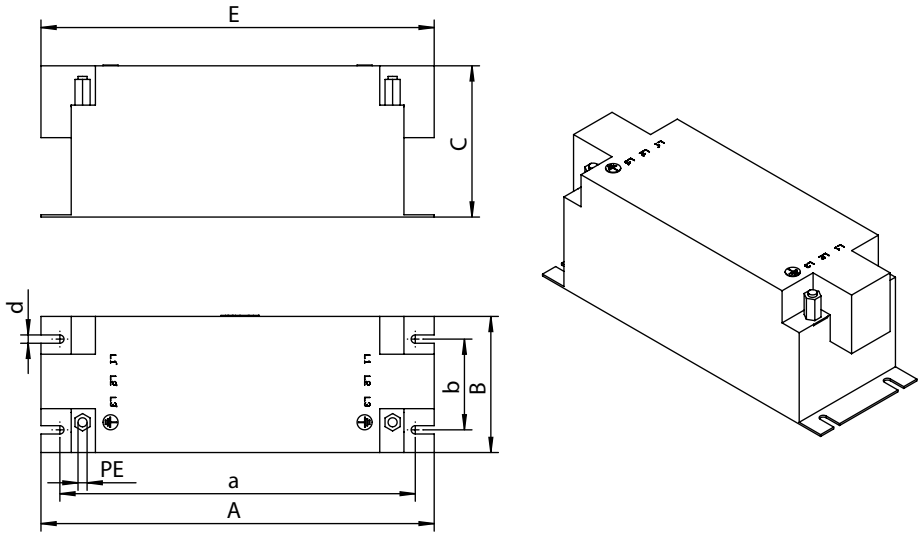

9007218145873675

Line filter	Main dimensions in mm				Mounting dimensions in mm			
	A	B	C	E	a	b	d	PE
NF0420-513	250	88	97	255	235	60	5.5	M6
NF0910-523	270	97	152	322	255	65	6.5	M8
NF1800-523	380	131	182	464	365	102	6.5	M10

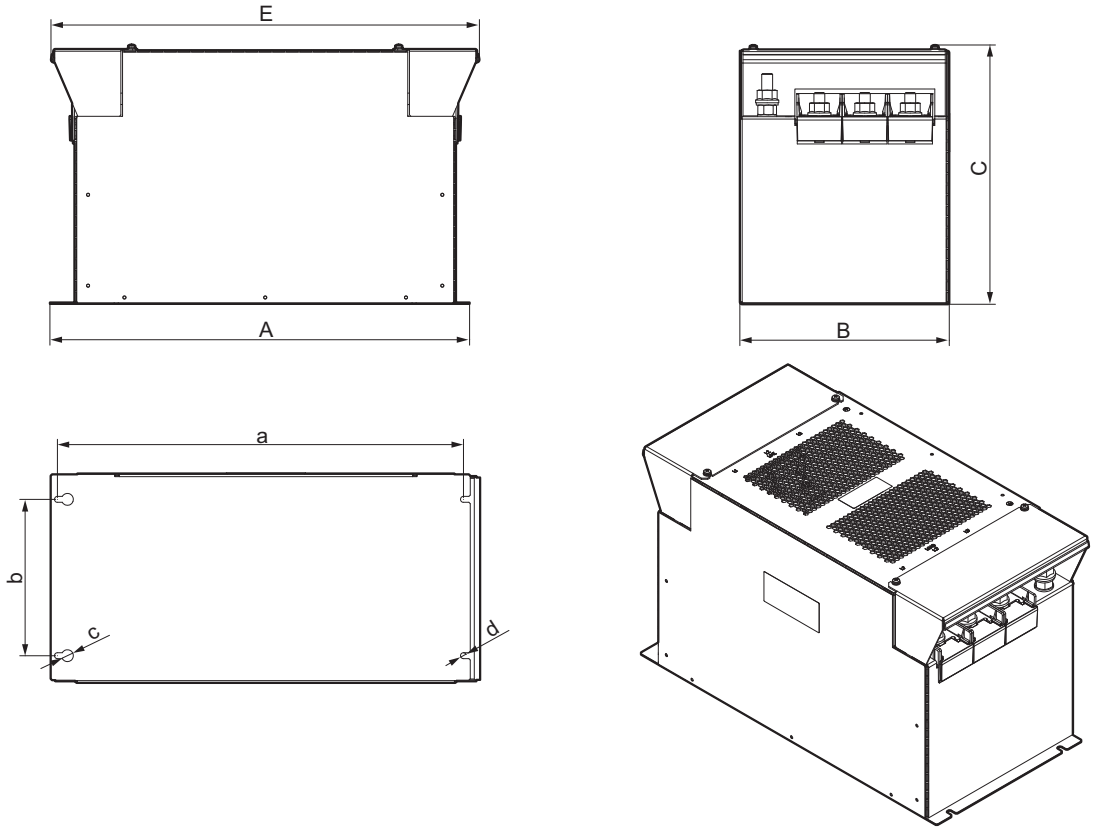

62767343883

Line filter	Main dimensions in mm				Mounting dimensions in mm				Connection
	A	B	C	E	a	b	c	d	PE
NF2700-503	462	230.5	288	474	447	172	13	6.5	M12

33955948/EN – 05/2026

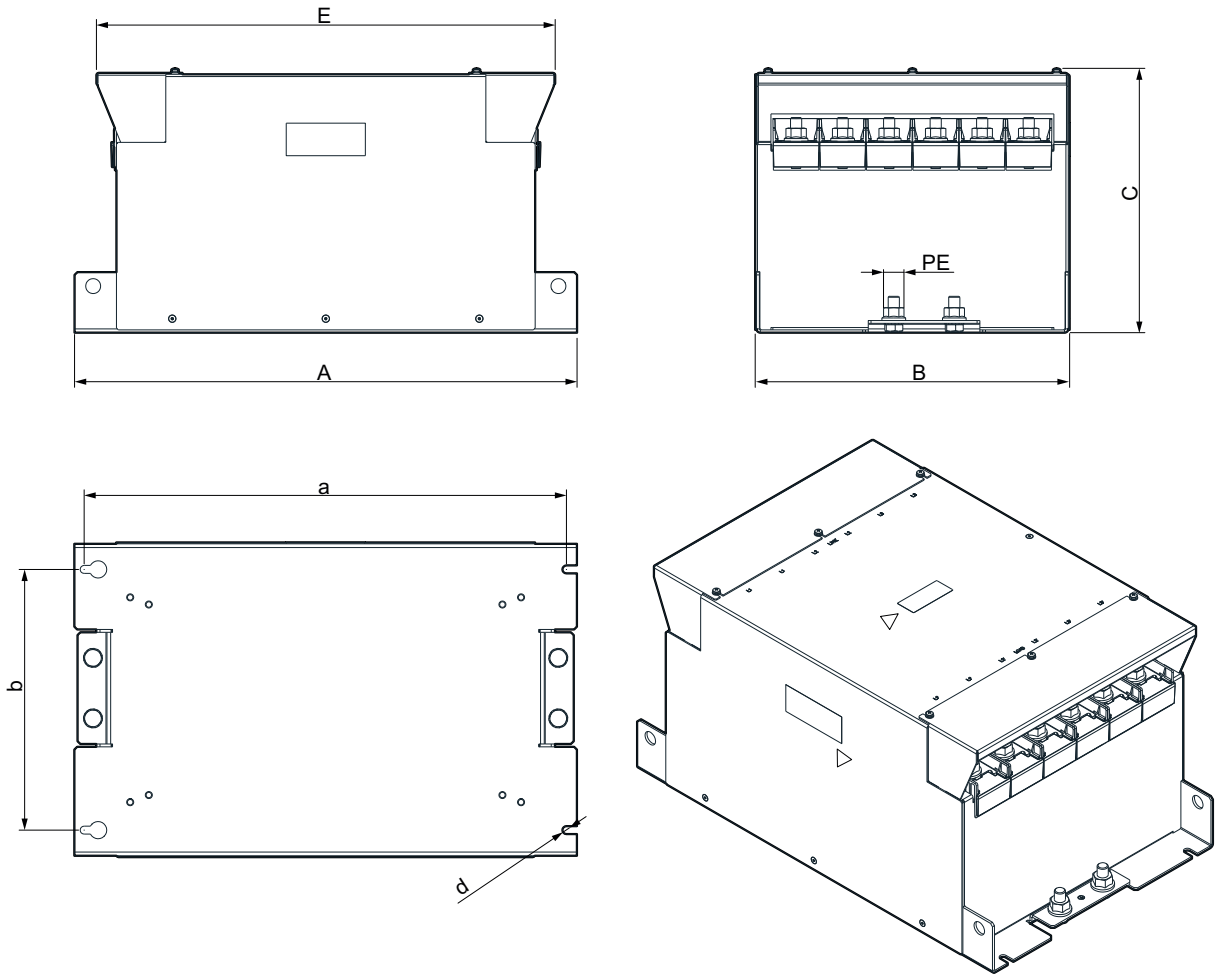

60848455435

Line filter	Main dimensions in mm				Mounting dimensions in mm			Connection
	A	B	C	E	a	b	d	PE
NF5400-503	540	338	285	500	519	280	8.5	M12

33955948/EN – 05/2026

4.28 ND.. line choke

4.28.1 Description

An ND.. line choke can be used as an option:

- To support overvoltage protection
- To smoothen the line current, to reduce harmonics
- For protection in the event of distorted line voltage
- Limiting the charging current when several inverters are connected together in parallel on the input end with a shared line contactor (nominal current of line choke = total of inverter currents)

Connect a line choke for limiting the inrush current:

- With 5 or more 3-phase devices
- With 2 or more 1-phase devices
- for each inverter MCX91A-0110-2E1-4..

Using a line choke per inverter is mandatory with MCX91A-0110-2E1-4...

Sizes 7 and 8 have an integrated line choke. An additional line choke is only required for a DC link connection of several devices, see manual MOVI-C® DC link connection.

4.28.2 Technical data

Line choke	Unit	ND0070 -503	ND0160 -503	ND0300 -503	ND0420 -503	ND0910 -503	ND1800 -503	ND3000 -503	ND6600 -503
Part number	–	17984173	17984181	17983800	17983819	17987520	17987539	18001211	18001262
Nominal line voltage (in accordance with EN 50160) V_{line}	V	3 × AC 200 – 500							3 × AC 200 – 500
Line frequency f_{line}	Hz	50 to 60 ± 5%							
Nominal current I_N	A	7	16	30	42	91	180	300	600
Nominal inductance	mH	0.36	0.2	0.1	0,045	0,035	0,018	0.05	0,028
Nominal power loss	W	4	9	11	13	53	116	280	162
Ambient temperature ϑ_A	°C	-10 – 45							0 – 45
		Derating at ambient temperature > 45 °C: -3% I_N/K up to maximum 60 °C							
Connection contact L1/L2/L3 – L1'/L2'/L3'	–	Screw terminal						M12 bolt	
Cross section L1/L2/L3 – L1'/L2'/L3'	mm^2	0.2 – 4		0.2 – 16		16 – 50	16 – 120	–	
Tightening torque L1/L2/L3 – L1'/L2'/L3'	Nm	0.5 – 1		1.2 – 2		3.5 – 6	12 – 20	30	14 – 20
PE connection contacts	–	M4 screw		M5 screw		M8 bolt	M10 bolt	M10 bolt	M12 bolt
Tightening torque PE	Nm	1.5		3		12	20		30
Degree of protection according to EN 60529	–	IPXXB				IPXXA		IPXXA with terminal cover provided	
Mass	kg	0.5	1.3	1.95	1.82	4.4	10	36	24.6

4.28.3 Assignment to an inverter

Line choke	ND0070-503	ND0160-503	ND0300-503	ND0420-503	ND0910-503	ND1800-503	ND3000-503	ND6600-503
MCX91A-....-5.3..	0010 – 0070	0095 – 0160	0240 – 0320	0460	0620 – 0910	1130 – 1770	–	–
MCX91A-....-2.3..	0017 – 0070	0093 – 0140	0213 – 0290	0420	0570 – 0840	1080	–	–

33955948/EN – 05/2026

4.28.4 Technical data

Line choke	Unit	ND0250-201
Part number	–	18001424
Nominal line voltage (in accordance with EN 50160) V_{line}	V	1 × AC 200 to 240
Line frequency f_{line}	Hz	50 to 60 ± 5%
Nominal current I_N	A	25
Nominal inductance	mH	1.17
Nominal power loss	W	27
Ambient temperature ϑ_A	°C	-10 – 40 Derating at ambient temperature > 40 °C: -3% I_N/K up to maximum 60 °C
Connection contact L1/L2/L3 – L1'/L2'/L3'	–	Screw terminal
Cross section L1/L2/L3 – L1'/L2'/L3'	mm^2	0.2 – 16
Tightening torque L1/L2/L3 – L1'/L2'/L3'	Nm	1.6[1)]
PE connection contact	mm	Connection lug for tab connector 6.3 × 0.8
Degree of protection in accordance with EN 60529	–	IPXXA
Mass	kg	1.5

1) Adhere to the specified tightening torques with a tolerance of +/- 10%.

4.28.5 Assignment to an inverter

Line choke	ND0250-201
MCX91A-....-2.1..	0110 (mandatory) 0017 – 0093 (optional)

4.28.6 Dimension drawings and dimensions

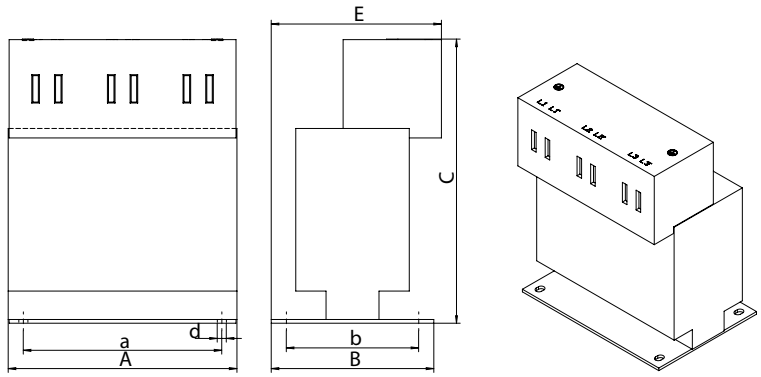

18891130251

Line choke	Main dimensions in mm				Mounting dimensions in mm			Connection
	A	B	C	E	a	b	d	PE
ND0070-503	78	57	105	56	65	40	4.8	M4
ND0160-503	96	70	120	65	71	54	4.8	M4
ND0300-503	121	86	145	86	105	70	4.8	M5
ND0420-503	121	86	150	90	105	70	4.8	M5

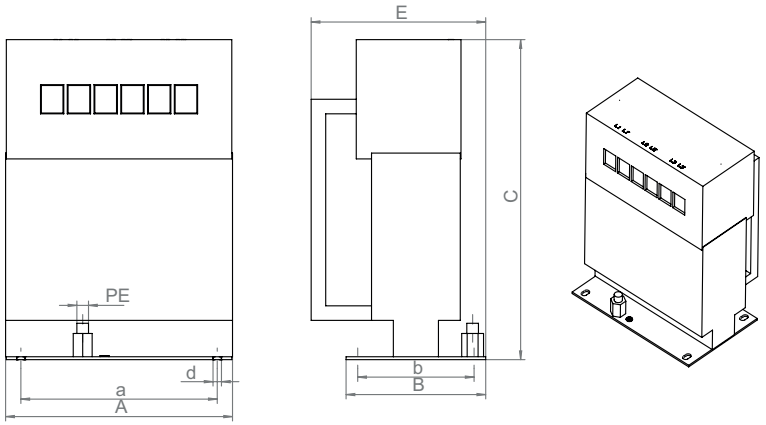

20917778571

Line choke	Main dimensions in mm				Mounting dimensions in mm			Connection
	A	B	C	E	a	b	d	PE
ND0910-503	156	96	220	120	135	80	5.8	M8
ND1800-503	187	121	260	153	166	93	6.2	M10

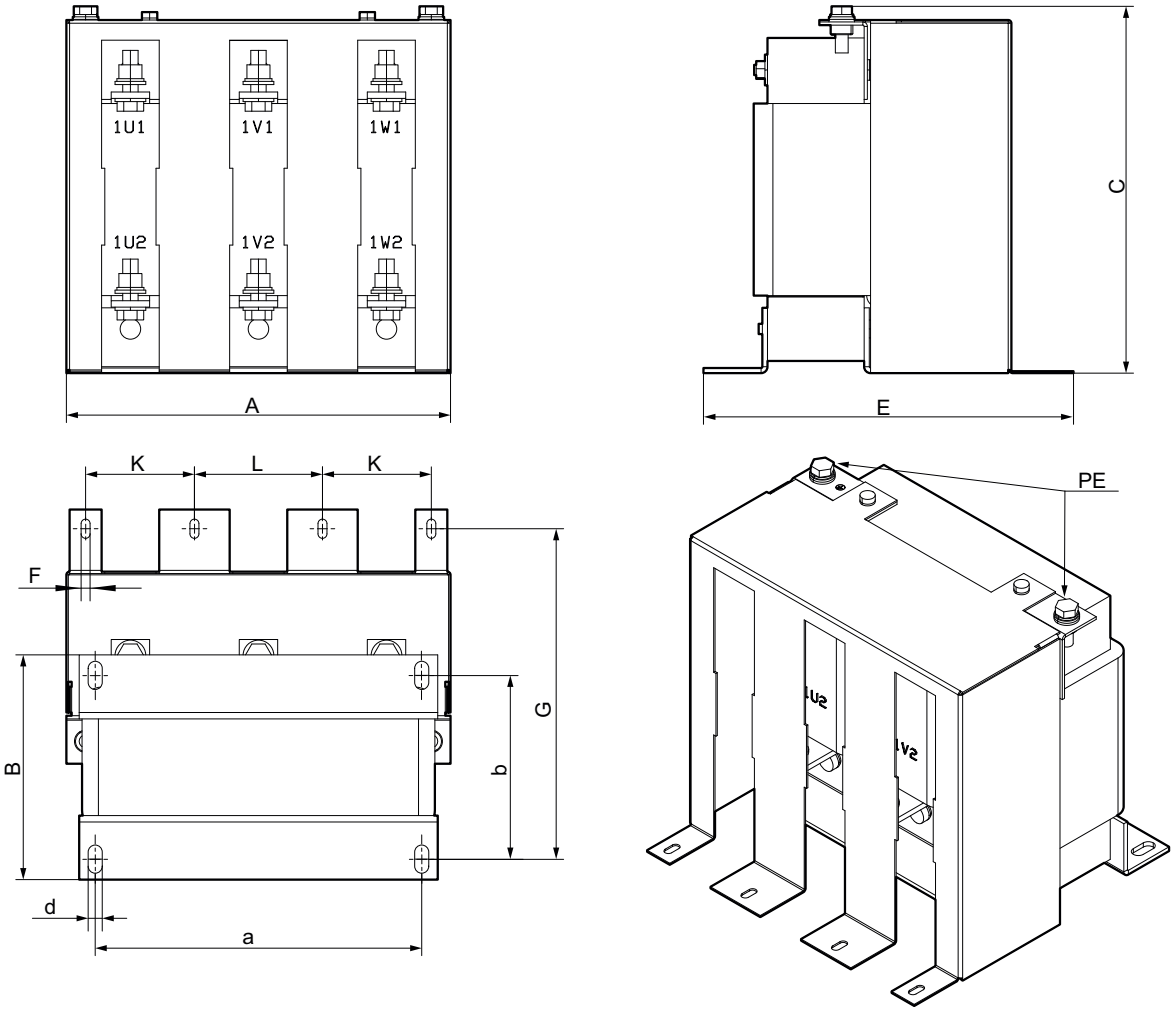

9007260103199627

Line choke	Main dimensions in mm								Mounting dimensions in mm			Connection
	A	B	C	E	F	G	K	L	a	b	d	PE
ND3000-503	300	176	295	290	7	260	85	100	255	144	11	M10
ND6600-503	300	193	295	310	7	276	85	100	255	160	11	M10

3955948/EN – 05/2026

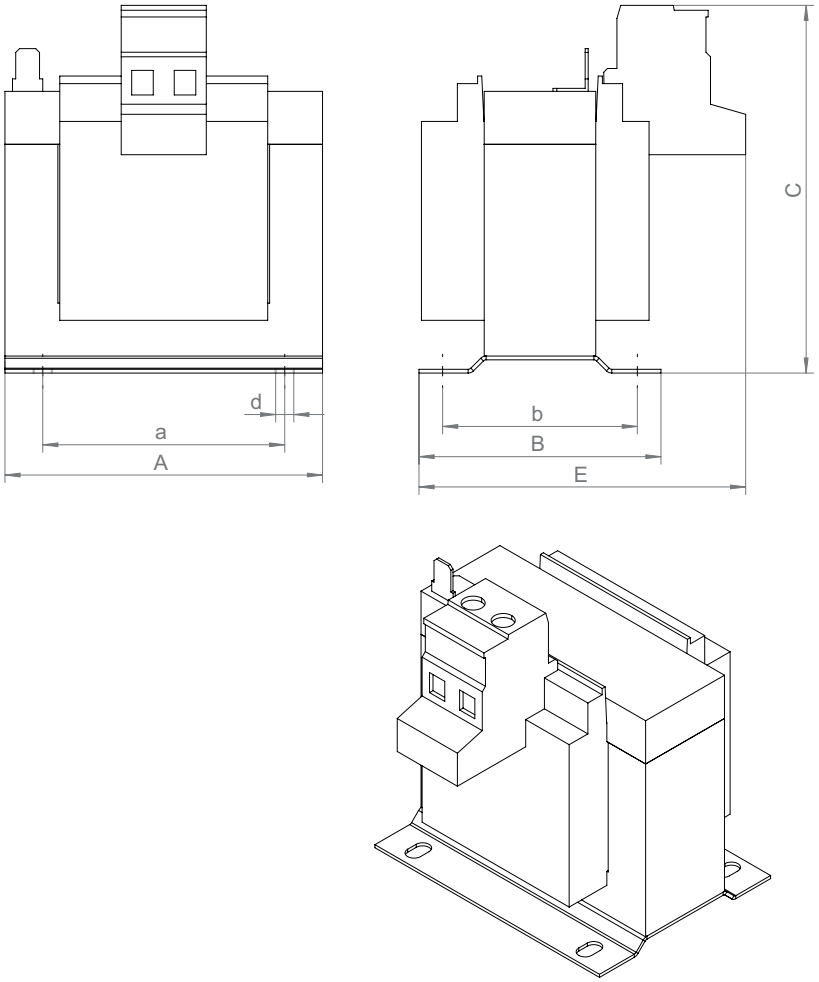

36108348299

Line choke	Main dimensions in mm				Mounting dimensions in mm			Connection
	A	B	C	E	a	b	d	PE
ND0250-201	84	64	98	87	64	51.5	4.8	6.3 × 0.8

33955948/EN – 05/2026

4.29 HF.. output filter

4.29.1 Description

The HF.. output filter is a sine filter used to smooth the output voltages of inverters:

- Discharge currents in the motor cables are suppressed.
- Motor winding insulations of third-party motors that are not suitable for inverters are protected.
- For long motor cables (> 100 m), overvoltage peaks are prevented.

4.29.2 Technical data

Output filter	Unit	HF0055-503	HF0125-503	HF0240-503	HF0460-503	HF0650-503	HF1150-503
Part number	–	17985110	17985129	17985137	17985145	17991277	17991269
Nominal voltage	V	3 × 0 to 500 V					
Nominal current I_N	A	5.5	12.5	24	46	65	115
Nominal power loss	W	80	120	200	400	500	900
Filter inductance	mH	8	3.2	2	1	0.74	0.4
Ambient temperature ϑ_A	°C	0 – 45 Derating at ambient temperature > 45 °C: -3% I_N/K up to maximum 60 °C					
Connection contacts U1/V1/W1/UDC – U2/V2/W2	–	Screw terminal					
Cross section U1/V1/W1/UDC – U2/V2/W2	mm^2	0.2 – 10		2.5 – 16		16 – 50	16 – 95
Tightening torque U1/V1/W1/UDC – U2/V2/W2	Nm	1.2 – 2		2 – 4		3 – 6	12 – 20
PE connection contacts	–	M6 bolt				M8 bolt	M10 bolt
Tightening torque PE	Nm	6				12	23
Degree of protection in accordance with EN 60529	–	IPXXB				IPXXA	
Mass	kg	8	18	25	40	48	68

4.29.3 Assignment to an inverter

The selection of HF.. output filters is based on the nominal motor current. The following table shows the assignment for a motor adapted to the inverter power.

Further information on the dimensioning of the HF.. output filter, see chapter "Project planning" (→ 🗎 132).

Output filter	HF0055-503	HF0125-503	HF0240-503	HF0460-503	HF0650-503	HF1150-503
MCX91A-....-5.3..	0032 – 055	0070 – 125	0160 – 0240	0320 – 0460	0620 1130 (parallel connection of 2 filters)	0750 – 0910 1490 – 1770 (parallel connection of 2 filters)
MCX91A-....-2.3..	0034 – 055	0070 – 093	0140 – 0213	0290 – 0420	0840 (parallel connection of 2 filters)	0570 1080 (parallel connection of 2 filters)
MCX91A-....-2E1..	0034 – 055	0070 – 110	–	–	–	–

33955948/EN – 05/2026

4.29.4 Dimension drawings and dimensions

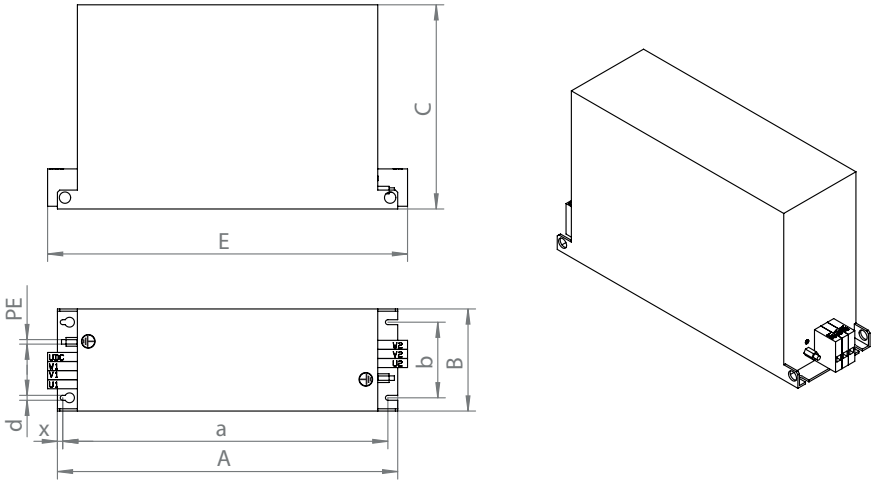

18014417778553611

Output filter	Main dimensions in mm				Mounting dimensions in mm				Connection PE
	A	B	C	E	a	b	d	x	
HF0055-503	310	105	160	–	290	75	6.5	7	M6
HF0125-503	390	120	215	–	370	90	6.5	7	M6
HF0240-503	450	135	270	–	430	100	6.5	7	M6
HF0460-503	450	160	310	–	430	120	6.5	7	M6
HF0650-503	635	210	285	637	610	174	8.5	10	M8
HF1150-503	725	260	273	755	700	224	8.5	10	M10

4.30 HD.. output choke

4.30.1 Description

The HD.. output choke can reduce the interference emission of the unshielded motor cable.

4.30.2 Technical data

Output choke	Unit	HD0125-503	HD0240-503	HD0460-503	HD1000-503	HD2000-503	HD6000-503	HD6001-503[1)]
Part number		17985153	17985188	17985161	17991307	17991250	17963362	29678803
Nominal voltage	V	3 × AC 0 – 500 V						3 × AC 200 – 500 V
Nominal current I_N	A	12.5	24	46	100	200	600	660
Nominal power loss	W	2.9	6	14	37	83	162	162
Ambient temperature ϑ_A	°C	0 – 45						-10 – 45
		Derating at ambient temperature > 45 °C: -3% I_N/K up to maximum 60 °C						
Connection contacts U1/V1/W1 - U2/V2/W2		Screw terminal					Copper rail	M12 bolt, each connection is provided in duplicate.
Cross section U1/V1/W1 – U2/V2/W2	mm^2	0.2 – 10	2.5 – 16		16 – 50	16 – 150	30 × 8, bore ØM12 mm	M12 bolt
Tightening torque U1/V1/W1/ – U2/V2/W2	Nm	1.2 – 2	2 – 4		6 – 8	12 – 20	–	14 – 20
PE connection contacts	–	M6 bolt			M8 bolt	M10 bolt	M12 × 50	M12 bolt
Tightening torque PE	Nm	6			12	23	30	30

Output choke	Unit	HD0125-503	HD0240-503	HD0460-503	HD1000-503	HD2000-503	HD6000-503	HD6001-503[1]
Degree of protection according to EN 60529		IPXXB			IPXXA		IP00	IPXXA with terminal cover provided
Mass	kg	0.85	1.46	2.35	3	6.5	16	24.6

1) The terminal contacts are provided in duplicate. The top row is covered by a removable plastic cover.

4.30.3 Assignment to an inverter

Output choke	HD0125-503	HD0240-503	HD0460-503	HD1000-503	HD2000-503	HD6000-503	HD6001-503
MCX91A-....-5.3..	0010 – 0125	0160 – 0240	0320 – 0460	0620 – 0910	1130 – 1770	2200 – 3000	2200 – 5880
MCX91A-....-2.3..	0017 – 0093	0140 – 0213	0290 – 0420	0570 – 0840	1080	–	–
MCX91A-....-2E1..	0017 – 0110	–	–	–	–	–	–

4.30.4 Dimension drawings and dimensions

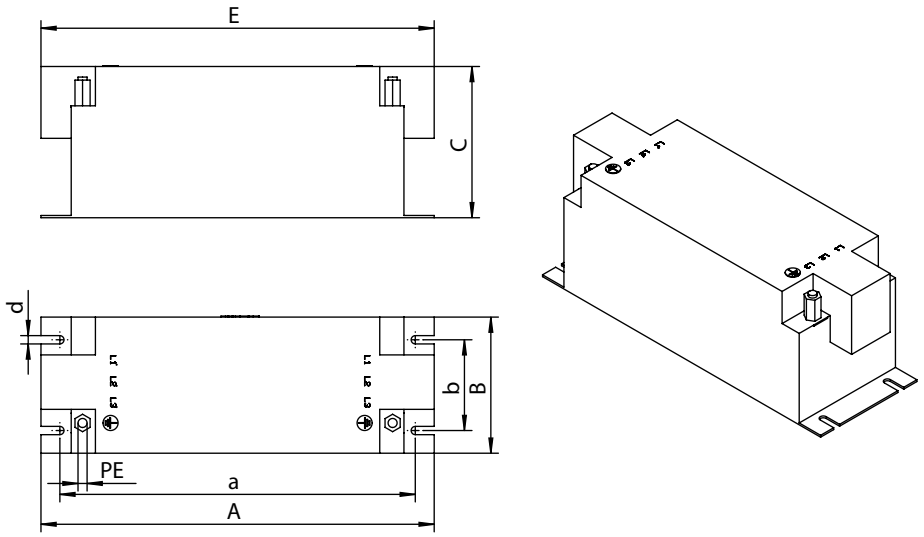

9007218145873675

Output choke	Main dimensions in mm				Mounting dimensions in mm			Connection
	A	B	C	E	a	b	d	PE
HD0125-503	153	62.5	72.5	151	138	40	5.5	M6
HD0240-503	173	92.5	82.5	178	158	65	5.5	M6
HD0460-503	185	122.5	112.5	189	170	90	5.5	M6
HD1000-503	255	116	143.5	265	240	82	6.5	M8
HD2000-503	300	178	175	330	286	120	6.5	M10

33955948/EN – 05/2026

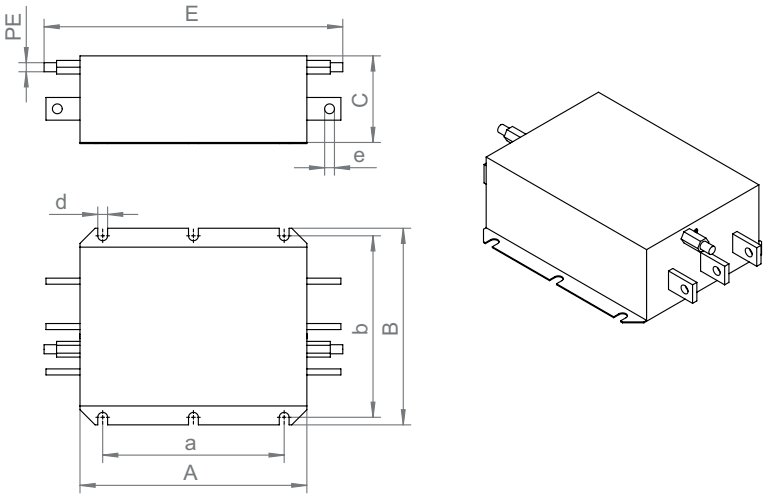

35975896715

Output choke	Main dimensions in mm				Mounting dimensions in mm				Connection
	A	B	C	E	a	b	d	e	PE
HD6000-503	300	260	116	395	240	240	13	13	M12

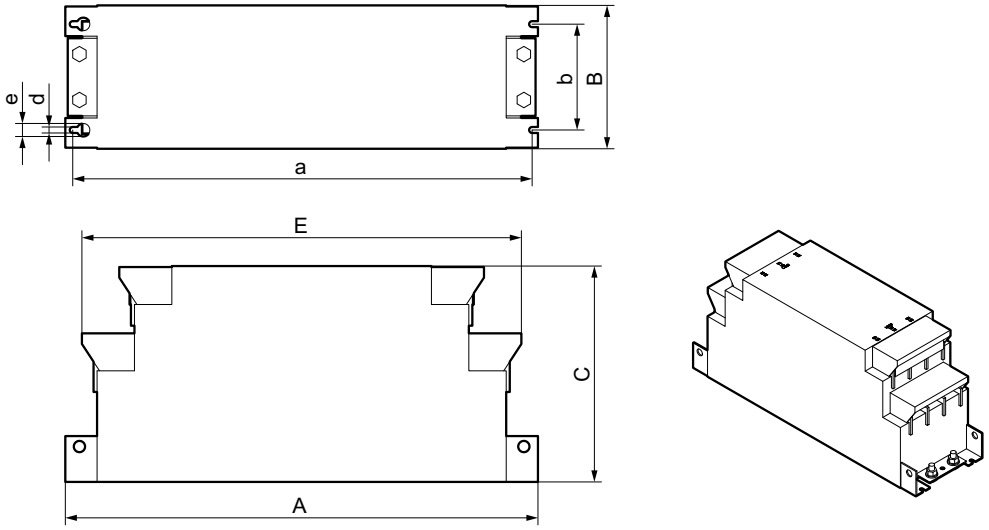

57642634251

Output choke	Main dimensions in mm				Mounting dimensions in mm				Connection
	A	B	C	E	a	b	d	e	PE
HD6001-503	670	204	306	623	652	150	8.5	18.5	M12

4.31 ZD.. DC link choke

4.31.1 Description

The ZD.. DC link choke suppresses the oscillations of the DC link voltage when the inverter is supplied via the DC link connection.

4.31.2 Technical data

DC link choke	Unit	ZD010-0200	ZD040-0070	ZD140-0020	ZD330-0006
Part number	–	17968437	17968402	17968410	17968429
Nominal current DC I_{line}	A	10	40	140	330
Power loss at I_N P_V	W	7	17	29	40
Ambient temperature ϑ_A	°C	-10 – 40 Derating at ambient temperature > 40 °C: -3% I_N/K up to maximum 60 °C			
Connection contact $+U_Z$ /$-U_Z$/$+U_Z'$/$-U_Z'$	–	Terminal strips	M6 bolt	M10 bolt	M12 bolt
Cross section $+U_Z$ /$-U_Z$/$+U_Z'$/$-U_Z'$	mm^2	4	–	–	–
Tightening torque $+U_Z$ /$-U_Z$/$+U_Z'$/$-U_Z'$	Nm	–	3	10	15.5
PE connection contact	–	M5 bolt	M6 bolt	M8 bolt	
Tightening torque PE	Nm	0.6 – 0.8	3	6	
Degree of protection according to EN 60529	–	IP10			

4.31.3 Assignment to an inverter

DC link choke	ZD010-0200	ZD040-0070	ZD140-0020	ZD330-0006
MCX91A-....-5.3..	0010 – 0095	0125 – 0320	0460 – 1130	1490 – 1770
MCX91A-....-2.3..	0017 – 0093	0140 – 0290	0420 – 1080	–

33955948/EN – 05/2026

4.31.4 Dimension drawings and dimensions

DC link choke ZD010..

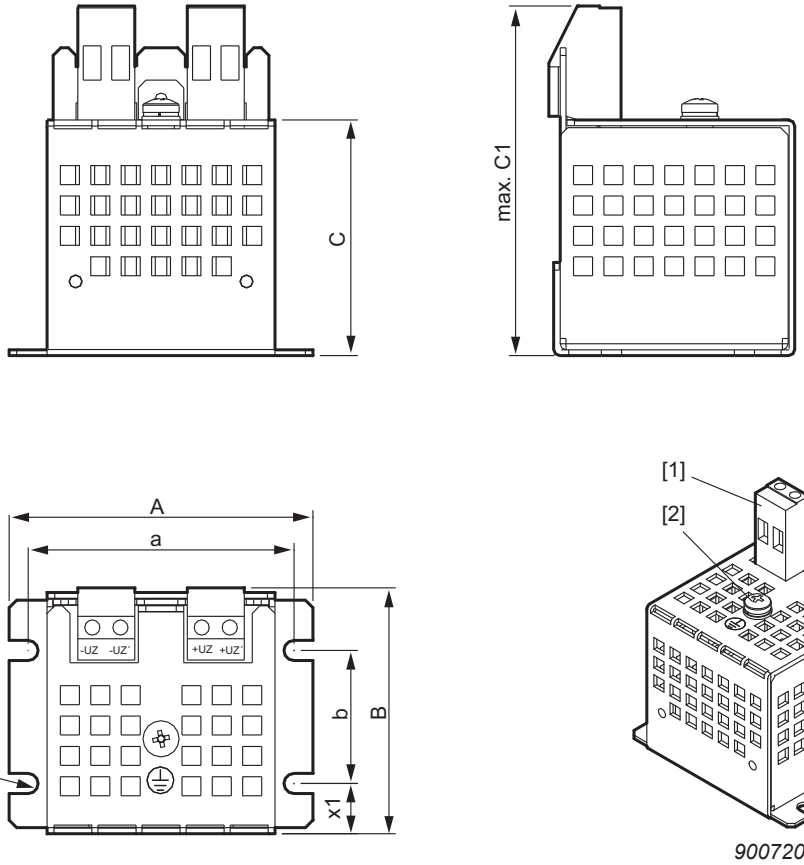

9007203134416907

[1] Connecting terminal
[2] Ground stud

DC link choke	Main dimensions in mm				Mounting dimensions in mm				Mass
	A	B	C	C1	a	b	x1	c	kg
ZD010-0200	80	64.75	62	95	70	35	13.25	5.3	0.56

DC link choke ZD040.. / ZD140.. / ZD330.. with and without cover

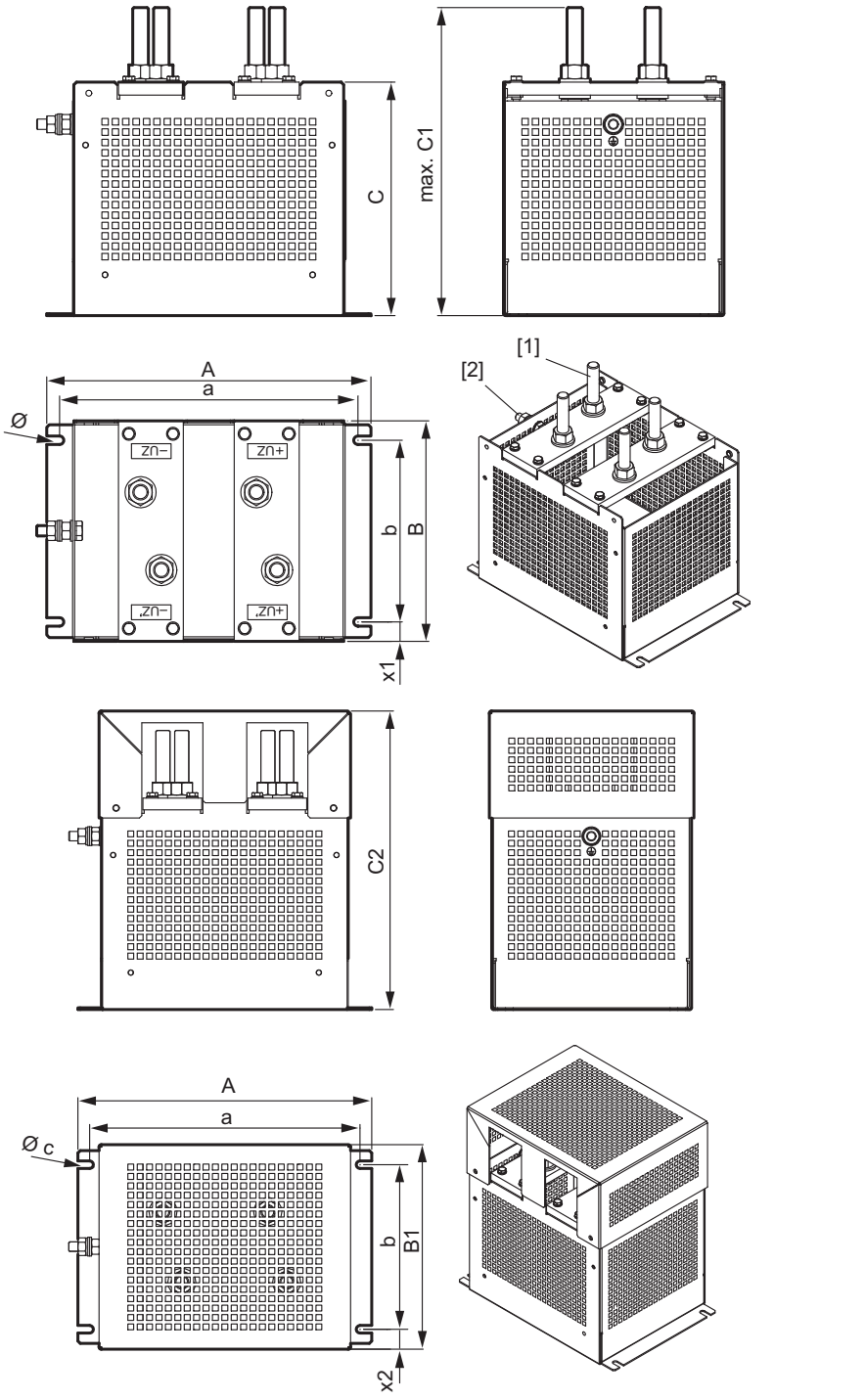

9007203134363787

[1] Terminal stud [2] Ground stud

DC link choke	Main dimensions in mm						Mounting dimensions in mm					Mass
	A	B	B1	C	C1	C2	a	b	c	x1	x2	kg
ZD040-0070	130	94	98	116	145	156	120	60	5.3	15	17	2
ZD140-0020	190	130	134	110	150	164.5	170	100	6.5	15	17	4.5
ZD330-0006	250	170	174	180	240	254	230	140	6.5	15	17	8.8

3955948/EN – 05/2026

4.32 Standard accessories

Inverter	Plastic cover	Number	Scope of delivery	Description	Part number
Size 5		10	Not included in the scope of delivery	"Plastic cover for degree of protection IP20" (→ 🗎 332)	28243625
Size 6	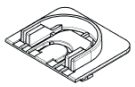	10		"Cover to increase the degree of protection" (→ 🗎 332)	28244540
Size 7		12			28257677
Size 8		24			2 × 28257677

Inverter	Carrying aid	Number	Scope of delivery	Description	Part number
Size 6		1	Included in the scope of delivery	"Auxiliary tools for assembly" (→ 🗎 17)	28106229
Size 7		1		"Auxiliary tools for assembly" (→ 🗎 17)	28257685

Inverter	Shield plate	Number	Scope of delivery	Description	Part number accessory pack
Size 0S, 0L	Shield plate for motor and control cables	1	Included in the scope of delivery	Shield plate for shield support and strain relief	28261291
Size 3 – 8	Shield plate on control unit for control cables				28220250
Size 3 – 4	Shield plate for motor and control cables				28222725
Size 5	Shield plate for coaxial cable of the MOVILINK® DDI cable				28270789
Size 6 – 8	Shield plate for coaxial cable of the MOVILINK® DDI cable				28297040

33955948/EN – 05/2026

4.33 Connectors

The following list is used for re-ordering connectors:

Representation	Slot	Function	Size	Part number
	X1	Line connection, 1-phase	0S	25680498
	X1	Line connection, 3-phase	0S	25680501
	X1	Line connection, 1-phase	0L	25680536
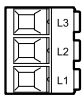	X1	Line connection, 3-phase	0L	25680544
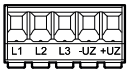	X1	Line connection, 3-phase	3	19148429
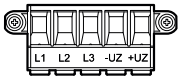	X1	Line connection, 3-phase	4	19148496
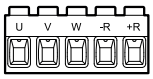	X2	Motor connection	0S	25680528
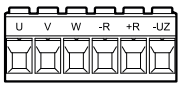	X2	Motor connection for 3-phase device	0L	25680560
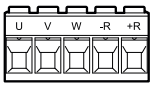	X2	Motor connection for 1-phase device	0L	25680552
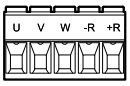	X2	Motor connection for 3-phase device	3	19148437
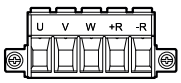	X2	Motor connection for 3-phase device	4	19148380
	X5	DC 24 V supply voltage	All	19148410
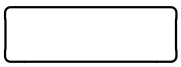	X6	Blind cover for STO slot	All	28132386
	X6	STO-E connector (with jumpers)	All	28129458
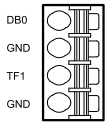	X10	Brake control and temperature evaluation	0S, 0L, 3 and 4	19151314

33955948/EN – 05/2026

Representation	Slot	Function	Size	Part number
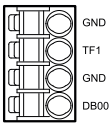	X10	Brake control and temperature evaluation	5 to 8	19147392
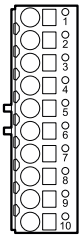	X20	Signal connection, 10-pin	All	17990653
	X22	Signal connection, 3-pin	All	17990688
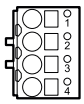	X23	Signal connection, 4-pin	All	17990661
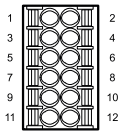	X60	Signal connection, 12-pin	All	25680471

4.34 Ports and services



For information on the product's Wi-Fi- and Ethernet-based ports and services, refer to the following documentation:

- Manual "Cybersecurity for inverters of the MOVI-C® modular automation system – Firmware < V20.00"

Note that additional firmware-specific versions of the referenced documentation will be published in the future. The respective assignment can be identified from the document title.

4.35 Dimension drawings

4.35.1 Size 0S with CLH21A, CLH31A, CLH51A



Rear

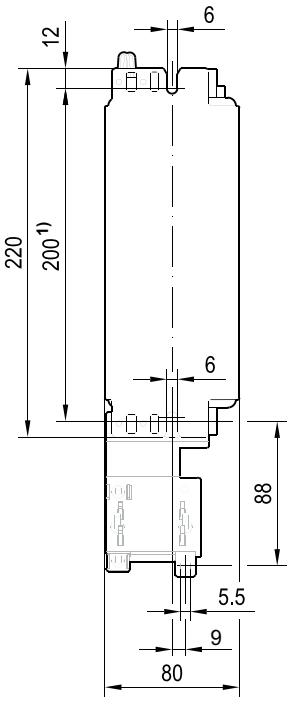

Side view

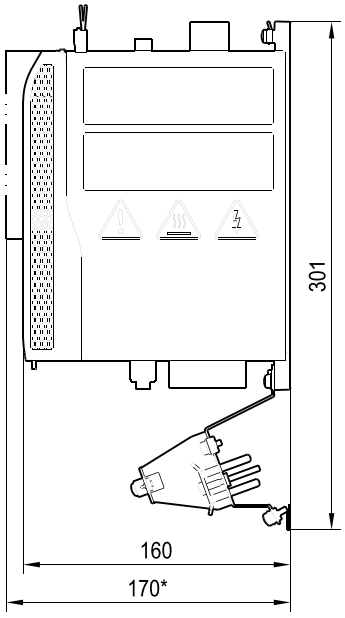

***+CBG11A / +CBG21A**

CLH21A

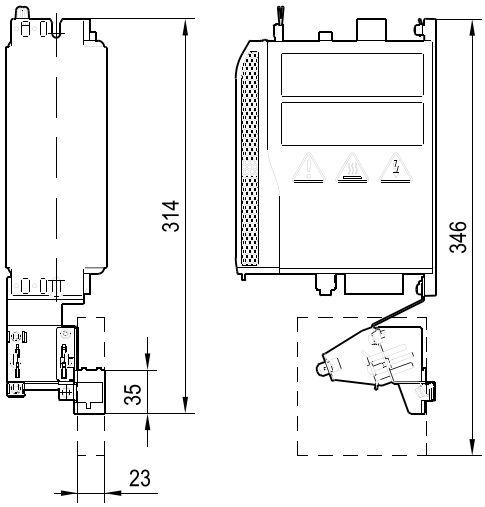

CLH31A

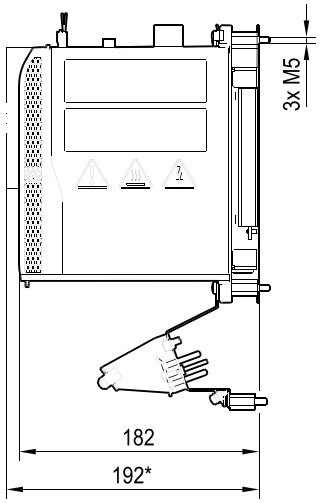

CLH51A

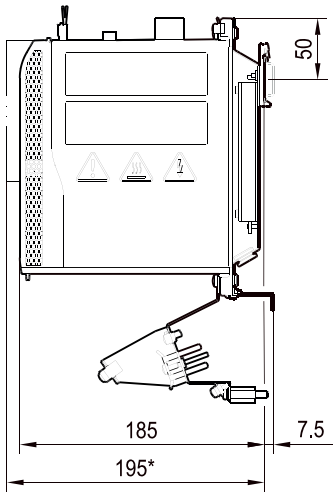

61955495051

[1] Minimum dimension is 196 mm.

33955948/EN – 05/2026

4.35.2 Size 0L with CLH21A, CLH41A, CLH61A



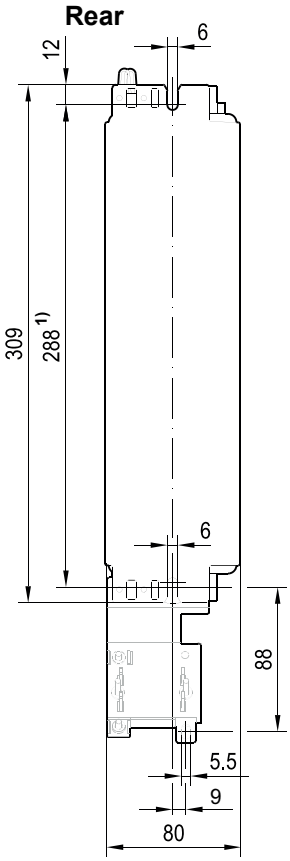

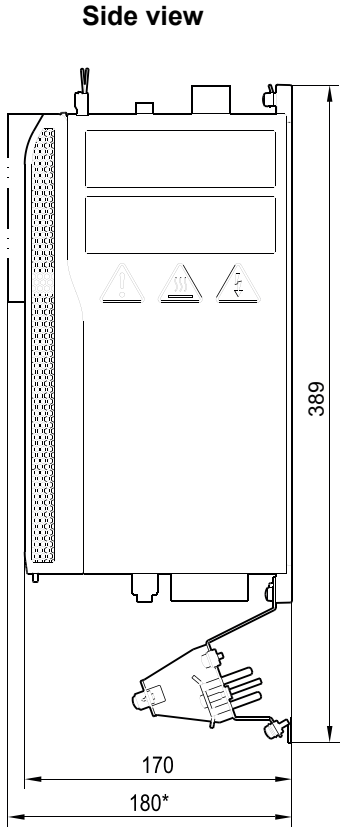

*+CBG11A / +CBG21A

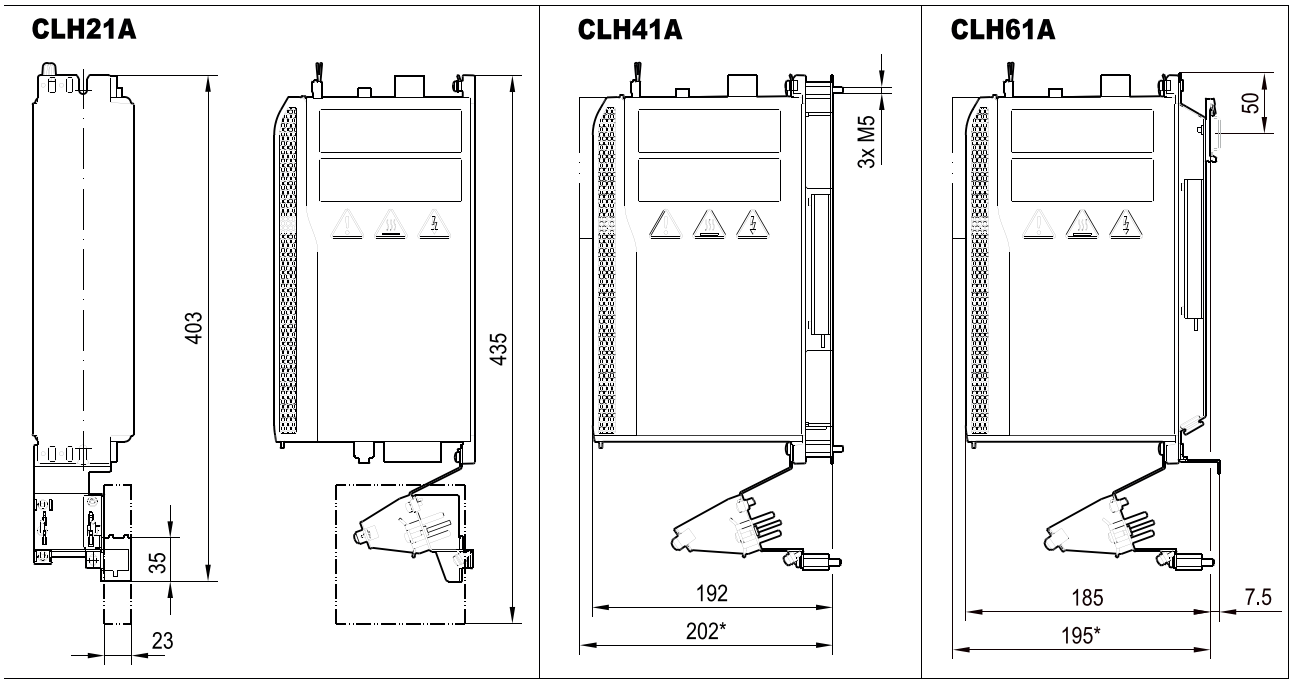

61955499915

1) Minimum dimension is 284.5 mm.

4.35.3 Size 3



42922092939

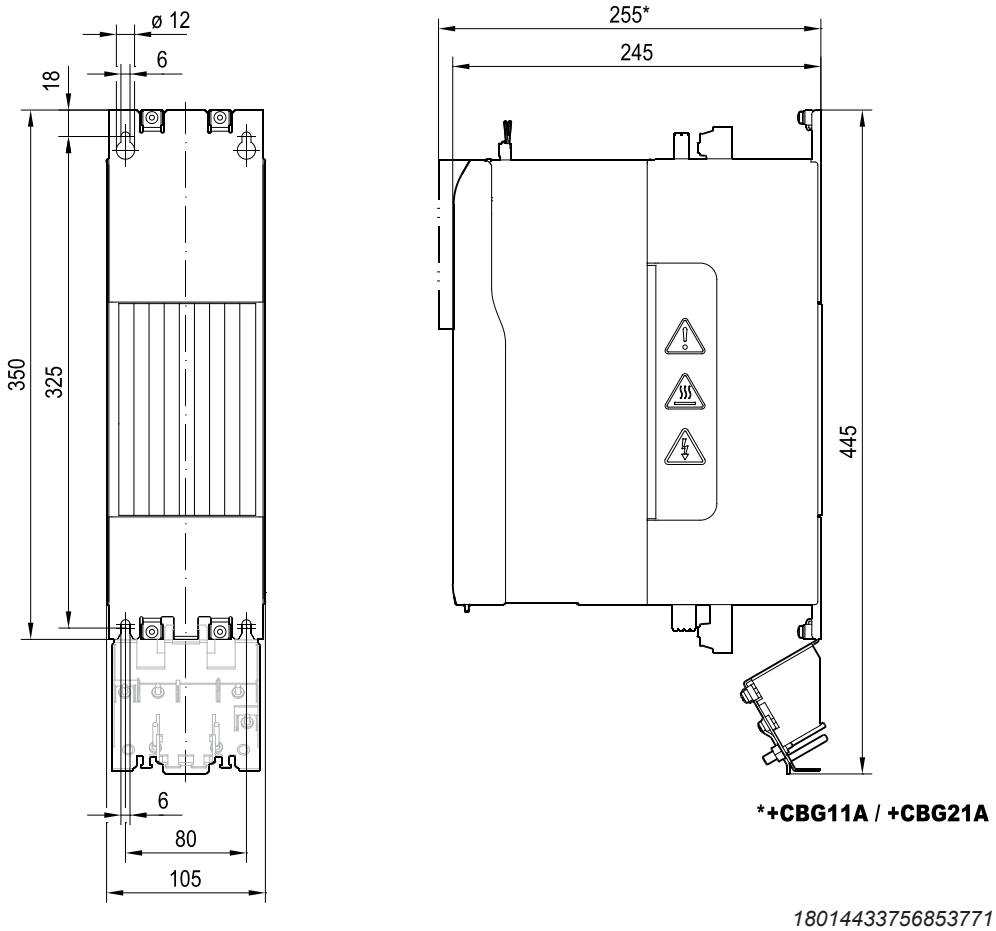

18014433756853771

33955948/EN – 05/2026

4.35.4 Size 4



42922171531

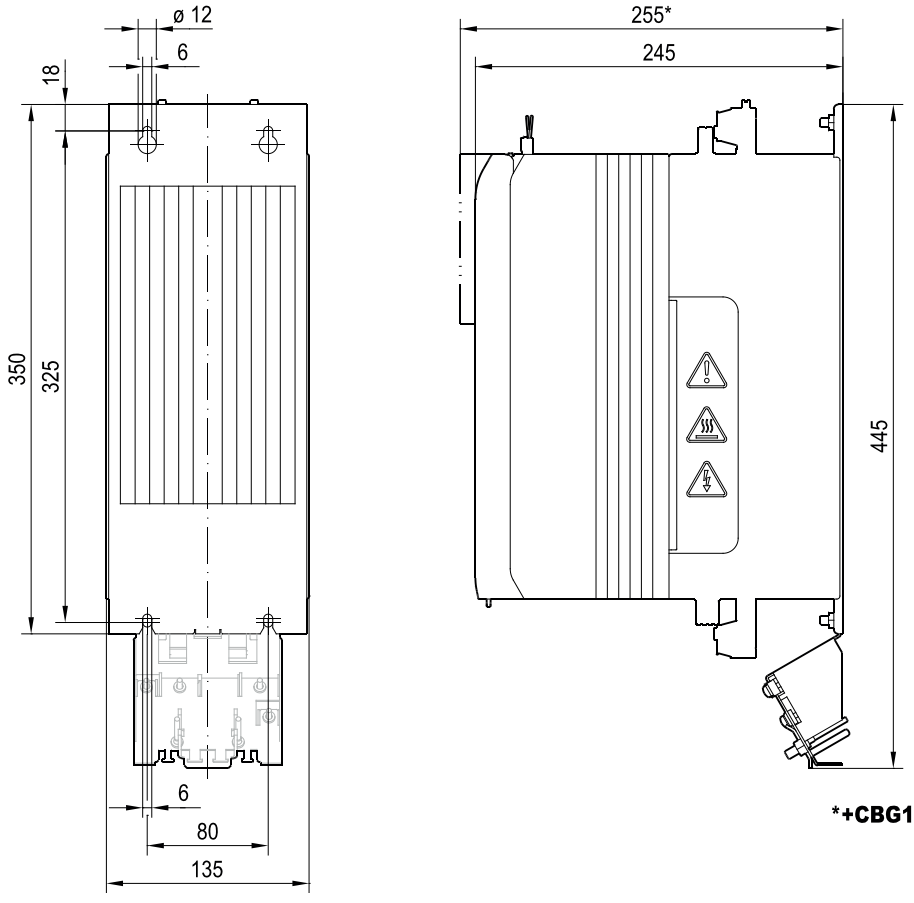

***+CBG11A / +CBG21A**

18014433757035403

4.35.5 Size 5



42922175243

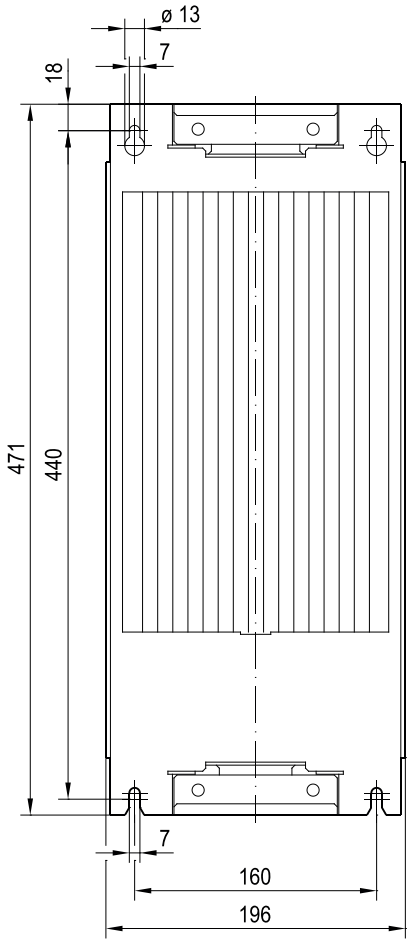

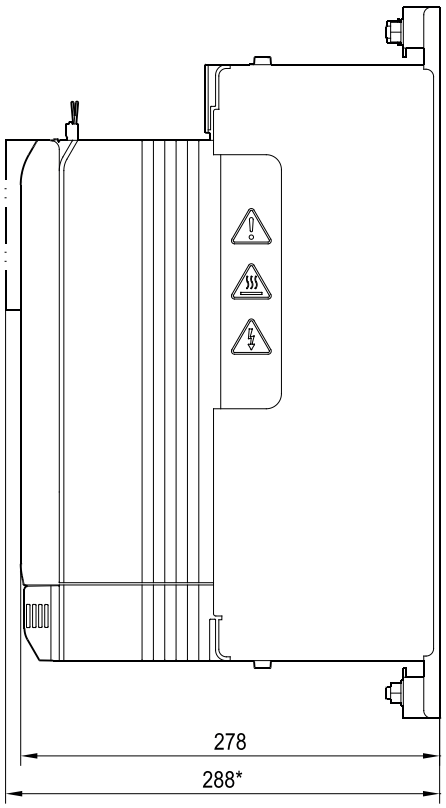

***+CBG11A / +CBG21A**

18014433757037835

33955948/EN – 05/2026

4.35.6 Size 6



42922178955

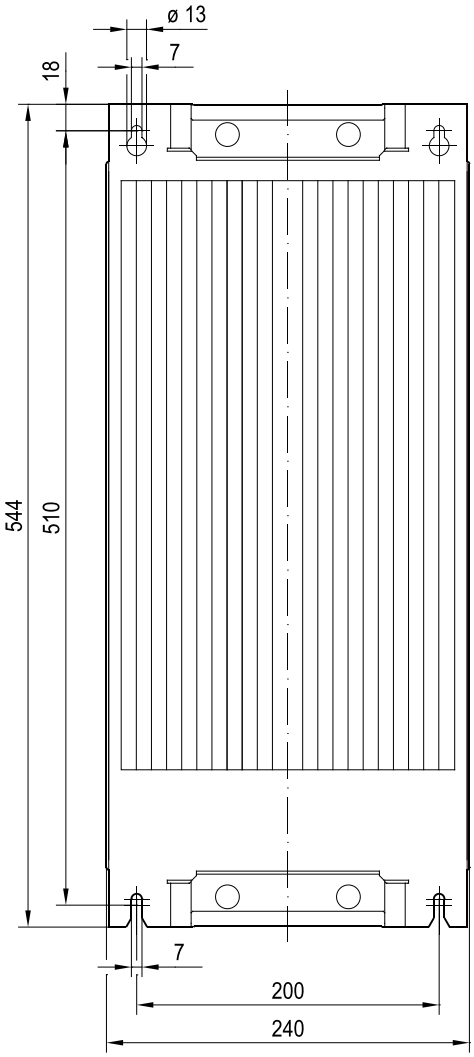

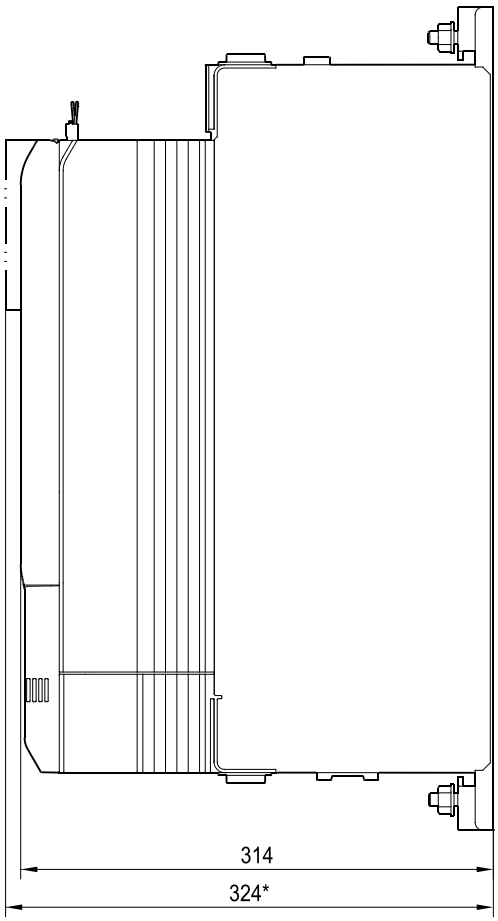

***+CBG11A / +CBG21A**

18014433757040267

4.35.7 Size 7



42922195467

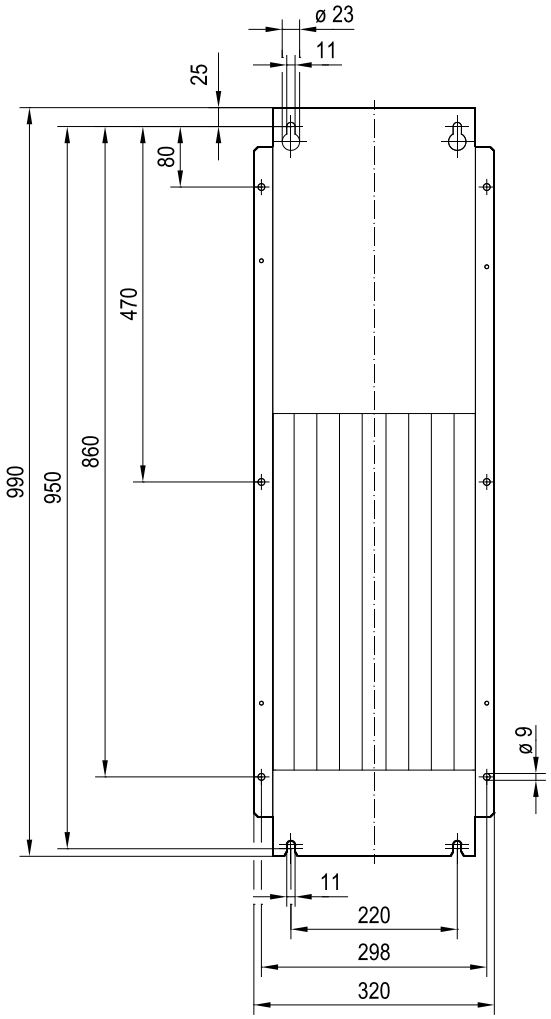

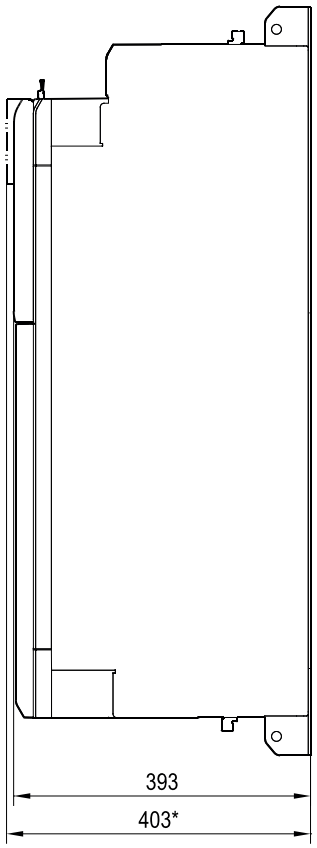

***+CBG11A / +CBG21A**

9007235244290699

33955948/EN – 05/2026

4.35.8 Size 8



42922199179

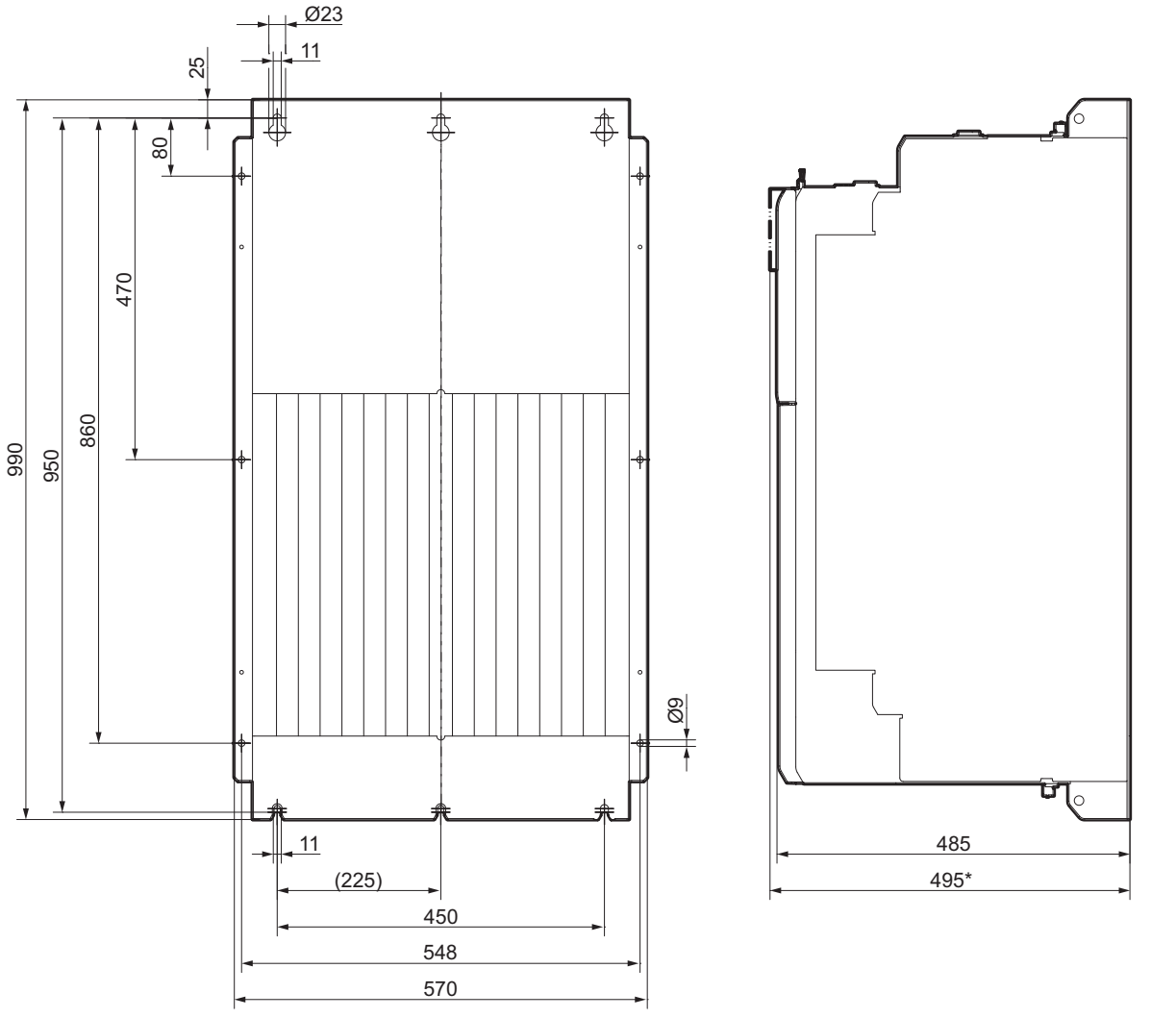

42205429515

5 Project planning

5.1 SEW-Workbench

The SEW-Workbench is the central configuration software for inverters from SEW-EURODRIVE.

It can process any required configurations, from entering the application to gear unit, motor, and inverter calculations. Optimization of the various axis cycles including accessory selection and error check of the entire drive system design are further features.

The Workbench can also be used to configure and dimension all other products from SEW-EURODRIVE, such as decentralized drives and gearmotors. This means SEW-Workbench allows for dimensioning drive solutions from the entire product range from SEW-EURODRIVE. The straightforward operation saves a great deal of time and minimizes complexity.

The key features of the SEW-Workbench are:

- Application selection
- Gear unit and motor calculation
- Price-optimized configuration
- Comparison of different solutions
- Inverter calculation
- Multi-axis optimization
- Parameterization of cable and accessories selection
- Dimensioning error check
- Parts list generation
- The electronic catalog with all products

The SEW-Workbench configuration software is available for download from the official SEW-EURODRIVE website.

To use SEW-Workbench, all you need to do is to register via the Online Support once you have downloaded and installed the software. An Internet update service ensures that the products and functions are always up-to-date.

33955948/EN – 05/2026

5.2 Schematic workflow for project planning

The following flow diagram illustrates the drive selection procedure for a positioning drive. The drive consists of a gearmotor that is supplied by an inverter.

Required information about the machine to be driven
- Technical data and ambient conditions.
- Positioning accuracy
- Speed setting range
- Calculating the travel cycle

↓

Calculate the relevant application data
- Travel diagram
- Rotational speeds
- Static, dynamic torques
- Regenerative power

↓

Gear unit selection
- Defining gear unit type, gear unit size, gear unit ratio, and gear unit design.
- Checking the positioning accuracy.
- Checking the gear unit load.
- Checking the input speed.

↓

Motor selection
- Maximum torque
- With dynamic drives: effective torque at medium speed
- Maximum speed
- Observe dynamic and thermal torque curves.
- Motor equipment (brake, connector, thermal motor protection, etc.)

↓

Inverter selection
- Selecting the communication variant
- Selecting the safety feature.
- Determining the control mode
- Motor/inverter assignment
- Check if the inverters fulfill the duration and overload requirements.

↓

Select the braking resistor
- Checking if the braking resistor fulfills the duration and overload requirements.
- Observe braking resistor assignment.

↓

Select other system components
- Motor and supply system cables
- Signal and encoder cables
- EMC accessories

↓

Selecting the 24 V voltage supply
- Determine the current demand of the 24 V voltage supply.
- Observe the requirements for the voltage tolerance.

↓

Ensure that all requirements have been met.

33955948/EN – 05/2026

5.3 Control mode

The characteristics of the motor connected to the inverter are influenced by the control modes used.

5.3.1 V/f

V/f control is for simple controlled operation of asynchronous motors without encoder feedback and motors with LSPM technology[1)] provided by SEW-EURODRIVE. The procedure operates an asynchronous machine on a parameterizable voltage/frequency characteristic. To keep the magnetizing current on a constant level, the voltage (V) is adjusted in proportion to the frequency (f).

The actual slip is estimated and can be compensated.

V/f control is suitable for applications with a limited speed setting range, where no dynamic step changes in load occur and where there are small requirements regarding the control characteristics.

V/f control is suitable for group drives. A group drive is an electrical parallel connection of several identical or different motors at one inverter. The motors do not have a rigid mechanical connection.

The V/f mode is an encoder-less mode and calculates the actual speed value. The calculation is always based on the electrical values of the motor; information from a potentially existing encoder system is not used.

If an encoder is parameterized in the encoder assignment as "Actual speed source", the speed measured by this encoder is issued as the actual speed by the inverter. Otherwise, the model speed calculated by the V/f mode based on stator frequency and slip is issued as the actual speed.

The V/f mode does not have a higher-level speed controller; speed controller parameterization is not possible. An acceleration and torque precontrol is not possible either.

1) Guided startup in preparation.

5.3.2 VFC^{PLUS}

VFC^{PLUS} is a high-performance control mode that can operate asynchronous motors and synchronous reluctance motors with very high torque dynamics with or without a rotary encoder.

The control mode VFC^{PLUS} can be operated as speed or torque control.

This control mode calculates all important state variables for controlling the motor by using a motor model.

For applications with a large speed setting range (especially for low speeds through to idle state) and high requirements regarding the control characteristics or for drives with high dynamic step changes in load, a motor encoder is absolutely necessary.

For applications with low requirements regarding the speed control characteristics and the torque dynamics, an encoder is not necessary. Without a rotary encoder, the electric rotor frequency is calculated in a model. In this case, stable stationary operation of the mode at low stator frequencies is not possible.

Due to the good torque dynamics, the VFC^{PLUS} control mode remains stable even in the event of sudden load changes and has a high torque accuracy. Typical applications for the VFC^{PLUS} control mode are speed-controlled asynchronous machines with high demands on the speed and torque stability.

33955948/EN – 05/2026

Switching to a rotating motor is possible (flying start function).

A higher-level speed control loop that has to be parameterized accordingly is always used for speed control.

If the control mode is operated without an encoder, the actual speed of the motor is calculated by the control mode.

If an encoder is used, the angle information of this encoder is used for the control mode. The actual speed of the motor is calculated from this encoder. The maximum dynamics of the speed control loop are reached with a high-resolution encoder.

For asynchronous motors, only the relative rotor angle is necessary. In other words, an incremental encoder is sufficient. For synchronous reluctance motors, the VFC^{PLUS} control mode requires an encoder system that delivers the absolute position within one motor revolution. In the case of encoder types that do not provide an absolute position within one motor revolution, a commutation must be performed before every first enable after booting the system (FCB 18).

The torque control operating mode can be selected independently of an encoder and does not need an encoder. With an encoder, stable stationary operation at a stator frequency of 0 Hz is also possible.

A higher-level speed control loop that has to be parameterized accordingly is always used for torque control.

Position-controlled operation is only possible with an encoder, as the actual position is calculated from the parameterized encoder. This encoder can be mounted on the track or on the motor. The accuracy of the position control can be increased with a motor encoder.

5.3.3 CFC

The CFC control mode is a current-controlled control mode. The CFC control mode allows the operation of asynchronous and permanent-field synchronous motors with encoder with maximum torque dynamics.

The CFC control mode requires information about the rotor angle and the motor speed. For this reason, an encoder feedback (motor encoder) is always necessary.

For asynchronous motors, only the relative rotor angle is necessary. Thus, an incremental encoder is sufficient.

For synchronous motors, the CFC control mode requires an encoder system that delivers the absolute position within one motor revolution. In the case of encoder types that do not provide an absolute position withing one motor revolution, a commutation must be performed before every first enable after booting the system (FCB 18).

The advantage of the CFC control mode is the very high dynamics that can be achieved, as a control reserve for reaching the dynamic maximum torque is always available. For this reason, the CFC control mode is suitable for drives with highly dynamic motion control.

5.3.4 ELSM®

The ELSM® control mode enables operation of permanent-field synchronous motors without an encoder.

33955948/EN – 05/2026

Since no encoder system is used for motor control in ELSM® control mode, control mode-specific restrictions arise compared to operation in CFC control mode with a motor encoder. Up to the transition speed, the ESLM® control mode in open-loop operation only works in open-loop speed control. Above the transition speed, the ELSM® control mode operates in closed-loop operation and is comparable to the CFC control mode with a resolver.

5.3.5 Characteristics of the control modes

Overview of drive-related control modes

	V/f		VFC^{PLUS}				CFC		ELSM®
Principle	Voltage controlled according to characteristic curve		Field-oriented, voltage-controlled, stator flux controller, torque controller				Field-oriented, current controller		Field-oriented, current controller
Motor	ASM	LSPM[1)]	ASM		RSM		ASM	SM	SM
Encoder	No	No	No	with	No	with	with	with	No
Dynamics	+	[2)]	+++	++++	+++	++++	+++++	+++++	++
Efficiency	+	[2)]	+++	+++	+++	+++	++	+++++	++++++
Motor parameter measurement	✓	[2)]	✓		✓		✓		✓
Determination of load inertia	–	–	✓		✓		✓		✓
Flying start	✓[3)]	[2)]	✓		✓		✓		✓
Flow optimization	–	–	✓		✓		✓		✓

1) Guided startup in preparation.
2) No specification.
3) In V/f flying start via DC braking.

Overview of the application-related control modes

	V/f	VFC^{PLUS}		CFC	ELSM®
Speed control	✓[1)]	✓			
Torque control	–	✓			
Positioning	–	Without encoder	With encoder	✓	–
		–	✓		
Continuous standstill capacity	–	Without encoder	With encoder	✓	✓
		–	✓		

33955948/EN – 05/2026

	V/f	VFC^{PLUS}	CFC	ELSM®
Characteristics	Generic V/f characteristic, simple speed setting	Highest torque accuracy	Max. dynamics, high peak torques	Max. energy efficiency for synchronous motors

1) Open-loop speed control.

Characteristic values for dynamics

	V/f	VFC^{PLUS}	CFC	ELSM®
Torque control time	–	≥ 2 ms[1)]	≥ 150 µs	
Time constant speed controller	–	≥ 4 – 6 ms	≥ 0.5 ms	≥ 6 ms
Rotational speed ripple	The speed ripple is mainly determined by the total mass moment of inertia, the torque ripple, and in particular the mechanical structure. It is therefore not possible to specify a general value.			

1) Valid in voltage control range, in field weakening range > 5 ms.

Characteristic values for setpoint resolution

	V/f	VFC^{PLUS}	CFC	ELSM®
Torque	–	32 bits (0.001% M)		
Rotational speed	32 bits (0.0001 min^{-1})			
Position (increment/revolution)	–	16 bits		
Position (increment absolute)	–	32 bits		

Characteristic values for accuracy of torque and speed

	ASM in VFC^{PLUS} without encoder		ASM in VFC^{PLUS} with encoder	
	Without motor temperature probe	**With motor temperature probe**	**Without motor temperature probe**	**With motor temperature probe**
Inaccuracy of the calculated torque	As a general rule: the more accurate the motor parameters, the more accurate the torque. For greater torque accuracy, measure the motor parameters with FCB 25.			
With FCB 25	< 5% M_N			
Typical deviation	< 10% M_N			
Maximum deviation[1)]	< 15% M_N		< 25% M_N	< 15% M_N

1) If n is permanently < 20% of the nominal speed.

33955948/EN – 05/2026

	ASM in CFC		PMSM in CFC and ELSM®	RSM in VFC^{PLUS}
	Without temperature sensor	**With temperature sensor**	**Without motor temperature probe**	**With motor temperature probe**
Inaccuracy of the calculated torque[1]	As a general rule: the more accurate the motor parameters, the more accurate the torque. For greater torque accuracy, measure the motor parameters with FCB 25.			
With FCB 25	< 5% M_N			
Typical deviation	< 10% M_N			
Maximum deviation[2]	< 15% M_N		< 25% M_N	< 15% M_N

1) Steady-state inaccuracy is the deviation of the mean actual value from the setpoint.
2) If n is permanently < 20% of the nominal speed.

	ASM in VFC^{PLUS} without encoder	RSM in VFC^{PLUS} without encoder	PMSM in ELSM®	All control modes with encoder
Inaccuracy of the calculated rotational speed[1]	Typical deviation depending on the accuracy of the motor parameters: 0.2 × f_{slip_nom}.	Typical deviation depending on the accuracy of the motor parameters, therefore no general statement possible: 1% n_N	Typical deviation in closed-loop operation (n > 2% n_N): 10^{-4} min^{-1}	Maximum deviation: Max(0,007% n_{set}, 10^{-4} min^{-1})

1) Steady-state inaccuracy is the deviation of the mean actual value from the setpoint.

Recommended maximum output frequency

SEW-EURODRIVE recommends not exceeding the output frequency of $f_{PWM}/10$ for all control modes.

f_{PWM}	V/f	VFC^{PLUS}	CFC	ELSM®
2.5 kHz	250 Hz			
4 kHz	400 Hz	250 Hz	400 Hz	
≥ 8 kHz	599 Hz	250 Hz	500 Hz	

FCBs that can be activated for selected control mode

FCB	Designation	V/f	VFC^{PLUS}	CFC	ELSM®
01	Output stage inhibit	✓	✓	✓	✓
02	Default stop	✓	✓	✓	✓
03	Profile velocity mode (pv, CiA402)	✓	✓	✓	✓
04	Manual mode	✓	✓	✓	✓
05	Speed control	✓	✓	✓	✓
06	Interpolated speed control	✓	✓	✓	✓

33955948/EN – 05/2026

FCB	Designation	V/f	VFC^{PLUS}	CFC	ELSM®
07	Torque control	–	✓	✓	✓
08	Interpolated torque control	–	✓	✓	✓
13	Stop at application limits	✓	✓	✓	✓
14	Emergency stop	✓	✓	✓	✓
15	Cyclic synchronous velocity mode (csv, CiA402)	✓	✓	✓	✓
17	Cyclic synchronous torque mode (cst, CiA402)	–	✓	✓	✓
26	Stop at user limits (speed-controlled mode)	✓	✓	✓	✓
FCBs that require a parameterized position encoder:					
04	Manual mode (position-controlled modes)	–	✓	✓	–
09	Position control	–	✓	✓	–
10	Interpolated position control	–	✓	✓	–
11	Homing mode (hm, CiA402)	–	✓	✓	–
12	Reference travel	–	✓	✓	–
16	Cyclic synchronous position mode (csv, CiA402)	–	✓	✓	–
19	Position hold control	–	✓	✓	–
20	Jog	–	✓	✓	–
21	Brake test	–	✓	✓	–
23	Brake test safety card	–	✓	✓	–
24	Profile position mode (pp, CiA402)	–	✓	✓	–
26	Stop at user limits (position-controlled mode)	–	✓	✓	–
FCBs that can be activated independently of the control mode:					
25	Motor parameter measurement	✓	✓	✓	✓

33955948/EN – 05/2026

5.4 FCB concept

The FCB concept describes the modular firmware design of inverters from the MOVI-C® modular automation system with which it is ensured that a wide range of drive functions can be selected or deselected quickly and easily using control words.

All primary functions are selected as FCBs. For example, positioning control requires the FCB 09, while speed control is implemented with FCB 05.

You can switch between different FCBs at any time. Switching to another FCB takes place with a maximum delay of 0.5 ms.

Different priorities are assigned to the FCBs. If an FCB with a higher priority than the currently active FCB is selected, the FCB with the higher priority is activated.

5.4.1 List of FCBs

The FCBs are sorted in descending order of their priority in the following list:

FCB		Binary	Fieldbus	EtherCAT®/ SBus^{PLUS}	EtherCAT®/ CiA402
		..-000	..-T00	..-S00	..-E00/..-L00
01	Output stage inhibit	✓	✓	✓	✓
14	Emergency stop	✓	✓	✓	✓
13	Stop at application limits	✓	✓	✓	✓
18	Rotor position identification	–	✓	✓	✓
25	Motor parameter measurement	✓	✓	✓	✓
12	Reference travel	–	✓	✓	–
11	Homing mode (hm)	–	–	–	✓
04	Manual mode	✓	✓	✓	✓
20	Jog	–	✓	✓	–
19	Position hold control	–	✓	✓	✓
21	Brake test	–	✓	✓	✓
10	Interpolated position control	–	✓	✓	–
16	Cyclic synchronous position mode (csp)	–	–	–	✓
09	Position control	–	✓	✓	–
24	Profile position mode (pp)	–	–	–	✓
06	Interpolated speed control	–	✓	✓	–
15	Cyclic synchronous velocity mode (csv)	–	–	–	✓
05	Speed control	✓	✓	✓	–
03	Profile velocity mode (pv)	–	–	–	✓
08	Interpolated torque control	–	✓	✓	–
17	Cyclic synchronous torque mode (cst)	–	–	–	✓
07	Torque control	✓	✓	✓	–
26	Stop at user limits	–	✓	✓	–
02	Standard stop	✓	✓	✓	✓

33955948/EN – 05/2026

FCB		Binary	Fieldbus	EtherCAT®/ SBus^{PLUS}	EtherCAT®/ CiA402
		..-000	..-T00	..-S00	..-E00/..-L00
00	Standard (stop default)	✓	✓	✓	✓

5.4.2 Description of the FCBs

FCB 01 Output stage inhibit

Activating FCB 01 stops the connected motor via the motor brake. If no brake is installed, the motor coasts to a stop.

FCB 02 Stop default

FCB 02 stops the drive with the preset profile value "Maximum deceleration". This value is limited by the "Application limit – deceleration".

FCB 02 is active (default) when no other FCB is selected.

FCB 02 is selected by the system, not by the operator.

FCB 04 Manual mode

The function block can be selected and activated via the function "Manual mode" using the MOVISUITE® engineering software. Manual mode is used for startup or for setup mode without a higher-level controller.

FCB 04 is selected by the system, not by the operator.

FCB 05 Speed control

The inverter can be operated as a speed-controlled axis.

The user can specify profile values for acceleration, deceleration, and jerk as the basic condition for speed control. The actual speed setpoint for the drive controller is generated in the controller cycle with the specified limit values by a profile generator integrated in the inverter.

FCB 06 Interpolated speed control

FCB 06 is used for cyclic speed setpoint inputs from higher-level controllers.

In multi-axis applications, a controller often calculates a path profile for several drive axes. The axis is only assigned setpoints (speed/torque and torque limits/precontrol values/inertia) that it has to follow. The axis limits the setpoints using the application limits. The path curve profile is controlled by the controller.

The setpoint cycle of the controller usually does not correspond to the setpoint cycle of the axis. If the axis were to "see" the same setpoint for several cycles, a step-shaped actual value would result. To prevent this from happening, the axis interpolates intermediate values. To do so, the setpoint cycle of the controller has to be known.

FCB 07 Torque control

The inverter can be operated as a torque-controlled axis.

The user can specify profile values for deceleration and jerk as the basic conditions for torque control. The actual torque setpoint for the drive controller is generated in the controller cycle with the specified limit values by a profile generator integrated in the inverter.

33955948/EN – 05/2026

During torque control, the maximum speed is restricted by the speed limits so that the drive cannot permanently accelerate with the preset setpoint torque while the counter-torque is too low.

FCB 08 Interpolated torque control

FCB 08 is used for cyclic torque setpoint inputs from a higher-level controller.

This higher-level controller usually calculates a track profile for several drive axes. The axis is then assigned just one setpoint (torque, torque limits, precontrol values, inertia) that it has to follow.

The inverter limits the setpoints using the application limits. The path curve profile is controlled by the controller.

The cycle in which the controller sends the setpoints to the axis normally does not correspond to the setpoint processing cycle of the inverter. If the inverter were to "see" the same controller setpoint for several cycles, a step-shaped actual torque value would result.

To prevent this from happening, the axis can calculate intermediate values (interpolate) if it knows the controller cycle. The inverter can be set to different cycle times of higher-level controllers.

FCB 09 Position control

FCB 09 is used for positioning to make it possible to use a position profile for reaching the target position. This position profile is parameterized by the profile generator. The inverter additionally provides the following positioning modes:

Absolute positioning

The position setpoint in user units is interpreted as an absolute target and is converted and executed in system units.

The travel range in system units is -2^{31} to 2^{31} -1. If this travel range is exceeded after conversion, the FCB issues an error.

Relative positioning

The position setpoint in user units is interpreted as the offset for the last setpoint that was transferred. After it has been converted into system units, it is added to the last setpoint. If the time calculated in system units is outside the travel range of -2^{31} to 2^{31} -1, the FCB issues an error.

Modulo in positive direction with absolute position specification

The position setpoint in user units is interpreted as the absolute position. It must be within the modulo range of the active drive:

- Lower limit = "Modulo min."
- Upper limit = "Modulo max."

If the position setpoint is outside this range, a fault is issued.

The drive always turns in a positive direction to reach the target.

Modulo in negative direction with absolute position specification

The position setpoint in user units is interpreted as the absolute position. It must be within the modulo range of the active drive:

- Lower limit = "Modulo min."
- Upper limit = "Modulo max."

33955948/EN – 05/2026

If the position setpoint is outside this range, a fault is issued.

The drive always turns in a negative direction to reach the new target.

Modulo with shortest distance with absolute position specification

The position setpoint in user units is interpreted as the absolute position. It must be within the modulo range of the active drive:

- Lower limit = "Modulo min."
- Upper limit = "Modulo max."

If the position setpoint is outside this range, a fault is issued.

The direction of the drive is determined using the last setpoint position (= current actual position after activation without an "In position" message) and the current setpoint position. From here, the shortest distance is determined and the direction of rotation for positioning is specified accordingly.

FCB 10 Interpolated position control

FCB 10 is used for cyclic preselected position setpoints from higher-level controllers.

In multi-axis applications, a higher-level controller usually calculates a track profile for several drive axes. The axis only receives setpoints (position, speed, torque, torque limits, precontrol values, inertia), which it must follow directly. The axis limits the setpoints using the application limits. The path curve profile is controlled by the controller. The setpoint cycle of the controller usually does not correspond to the setpoint cycle of the axis. If the axis were to "see" the same setpoint for several cycles, a step-shaped actual value would result. To prevent this from happening, the axis interpolates intermediate values. To do so, the setpoint cycle of the controller has to be known.

FCB 12 Reference travel

To perform positioning operations, a drive has to be referenced to a defined start or reference position within the permitted travel distance. From this reference position, positions such as the machine zero can be specified and approached. With each restart of the inverter, referencing the position encoders is always necessary if position encoders do not have an absolute position detection. When using absolute encoders, the absolute position is immediately known when starting the system. An absolute encoder still has to be referenced to match the displayed position with the plant's reference system. Several reference travel types are available for referencing and for finding the reference point:

0: Deactivated

1: Zero pulse – negative end

2: Reference cam – negative end

3: Reference cam – positive end

4: Positive limit switch

5: Limit switch negative

6: Reference cam flush – limit switch positive

7: Reference cam flush – limit switch negative

8: Referencing to reference travel

9: Fixed stop positive

10: Fixed stop negative

11: Absolute position of encoder

33955948/EN – 05/2026

FCB 13 Stop at application limits

When FCB 13 is activated, the drive stops with speed control using the preset application limit deceleration.

FCB 14 Emergency stop

When FCB 14 is activated, the drive stops with the preset emergency stop deceleration.

The emergency stop deceleration should always be greater than or equal to the "Application limit deceleration". If a smaller deceleration value than the "Application limit deceleration" is specified for the emergency stop deceleration, the "Application limit deceleration" is used as the emergency stop deceleration.

FCB 18 Rotor position identification

For the operation of permanent magnet synchronous motors, the exact position information of the rotor is required for closed-loop control.

FCB 18 is required for the encoder calibration of rotary and linear synchronous motors with encoder. FCB 18 requires an electrical startup of the drive.

The drive must be separated from the load, i.e. also from the gear unit.

For a third-party motor, it is recommended to run FCB 25 before performing rotor position identification.

FCB 19 Position hold control

When FCB 19 is activated, the drive stops with speed control. After the drive reaches an idle state, the position is kept with position control as long as FCB 19 is active.

FCB 20 Jog mode

FCB 20 is used for the setup mode when a higher-level controller is used.

FCB 20 can only be activated in operating modes with encoder feedback.

FCB 20 allows the user to move an axis in a positive and negative direction.

Control is performed via control signals that are specified by means of control words, via digital inputs of a higher-level controller or via input terminals.

For startup or for teach mode without a higher-level controller, use the manual mode of the MOVISUITE® engineering software, see FCB 04 Manual mode.

33955948/EN – 05/2026

FCB 21 Brake test

FCB 21 tests the function and performance of up to 2 brakes for each inverter. The function generates a configurable torque against the applied brake (static test). Movement within a configured limit is permitted. For systems with two brakes, both brakes are tested separately – first brake 1 and then automatically brake 2. The brake test is compatible with motor brakes and external brakes.

In safety systems, diagnostics may be required by standards, e.g. EN ISO 13849-1. The FCB 21 brake test is suitable as a diagnostic function for safe brake systems up to performance level e (PL e). The safety-related subfunctions involving brakes – safe stopping (SBA) and safe holding (SBH) – are reliably diagnosed by the FCB 21 brake test. A review by TÜV Nord confirmed the suitability of FCB 21 for safety systems. For the safety assessment, a diagnostic coverage of DC = 90% (DC = diagnostic coverage) can be assumed for the FCB 21 brake test diagnostic function.

The brake test can be optimally adapted to a wide range of application requirements. Status messages are available as feedback, as well as the test results "passed" (test result OK) and "failed" (test result NOK) for each brake separately. The test result "OK" indicates that no movement or only movement below the permissible limit was detected during brake testing. Optionally, additional test results, such as measured torque and movement values, can be used.

In gravity-loaded axes, the test torque for the brakes is the sum of the current application load torque and the torque additionally generated by the motor. The load torque in systems often varies depending on the load condition or the position at which the brake test is performed. In such cases, the load torque is unknown when the brake test is started, making it more difficult to configure the brake test to meet the application requirements. With the FCB 21 brake test, you can either specify a fixed load torque or use the integrated automatic load detection of FCB 21. The automatic load detection in particular significantly simplifies startup and provides greater flexibility. Automatic load detection ensures that the brakes are tested with the configured test torque, even if the load torque in the application varies from one test to another.

FCB 21 is compatible with drive train 1 (DT 1). The motor must be started up using the VFC^{PLUS} or CFC control mode. This requires a motor encoder that is suitable both for the control mode and for the position control/position hold control function. During an active brake test, movement is detected and monitored via the motor encoder. If a distance encoder is also enabled in the control loop for DT 1, the brake test can monitor the maximum permitted movement using either the motor encoder or the distance encoder.

The use of HTL encoders via digital inputs (counter inputs) is not recommended for the FCB 21 brake test, for example with MOVITRAC® advanced, as a possible failure of an encoder track signal would not be detected. This can result in a test outcome of "OK" even if the motor moves beyond the limit during an active brake test. For this reason, it is preferable to use encoders connected to the inverter's encoder interface or via MOVILINK® DDI.

The brake(s) can be controlled as follows:

Brake control	1 brake	Two brakes
Integrated MOVILINK® DDI brake control (e.g., BS1Z, BG1Z)	✓	–
Brake output DB0/DB00	✓	–
Brake output DB0/DB00 and additional wiring of 2 external relays for separate control of the two brakes	–	✓
Safe digital outputs F-DOx of the CS..A safety option	✓	✓[1)]

✓Brake control is possible.

33955948/EN – 05/2026

Brake control	1 brake	Two brakes

– Brake control is not possible.

1) Available from inverter FW ≥ 13 in combination with safety option CS..A FW ≥ 6.

FCB 25 Motor parameter measurement

FCB 25 is used during startup to determine the required parameters for the electric equivalent wiring diagram.

The nameplate data of the connected motor is required for motor parameter measurement.

After the motor parameter measurement has been completed, the motor is completely started up electrically. Values that are not yet final at this stage, such as maximum speed and maximum torque, are estimated. The values have to be corrected at a later time to reach the full performance of the motor.

FCB 25 should only be called up if no output filter is used. Otherwise, the FCB provides incorrect results because of the output filter inductance.

Calling up FCB 25 is generally recommended for third-party motors. FCB 18 must be executed afterward for encoder calibration with synchronous motors, if required.

For synchronous reluctance motors, a braking resistor is mandatory for calling up FCB 25.

FCB 26 Stop at user-defined limits

FCB 26 is used for stopping at user-defined limits. The user-defined limits are either available as local setpoints or initiate the downward ramp via the fieldbus with adjustable parameters. You can choose between a speed-controlled ramp and a position-controlled ramp. Unlike the other stop FCBs (FCB 13/FCB 14), FCB 26 has a very low priority.

This makes it possible to select FCB 26 by default (e.g., the bit in the control word that selects this FCB is always TRUE). This means that FCB 26 is always active when all other FCBs are deselected. This makes it possible to always stop in a position-controlled manner.

In position-controlled mode, FCB 26 has lag error monitoring. When the stop is reached, the brake remains released and the motor remains energized.

5.4.3 Setpoints and limits in the FCBs

Setpoint connection

The following table shows which setpoints are used by which FCBs.

Parameters	FCB						
	05	06	07	08	09	10	20
Position	–	–	–	–	✓	✓	–
Speed	✓	✓	–	–	–	o	o
Torque	–	–	✓	✓	–	–	–
Acceleration precontrol	–	o	–	–	–	o	–
Mass moment of inertia	–	o	–	–	–	o	–
Torque precontrol	–	o	–	–	–	o	–

33955948/EN – 05/2026

Parameters	FCB						
	05	06	07	08	09	10	20
Correcting value of external position controller	–	o	–	–	–	–	–

✓ Always active

o Depending on FCB setting

– Inactive

INFORMATION

In the V/f control mode, only the "Speed" setpoint is used.

Profile value connection

The following table shows which profile values are used by which FCBs.

Parameter	FCB										
	02	05	06	07	08	09	10	13	14	20	26
Maximum positive speed	–	–	–	✓	✓	✓	–	–	–	–	–
Maximum negative speed	–	–	–	✓	✓	✓	–	–	–	–	–
Maximum acceleration	–	✓	–	–	–	✓	–	–	–	o	–
Maximum deceleration	✓	✓	–	–	–	✓	–	–	–	o	✓
Jerk time	–	✓	–	✓	–	✓	–	–	–	o	✓
Maximum torque Q1 to Q4	–	✓	✓	✓	✓	✓	✓	o	o	–	–

✓ Always active

o Depending on FCB setting

– Inactive

INFORMATION

In the V/f control mode, the "Maximum torque Q1 to Q4" profile value is not used.

Limit values

The following table shows which limit values are used by which FCBs.

Parameter	FCB														
	02	04	05	06	07	08	09	10	12	13	14	19	20	21	26
Positive speed	–	✓	✓	✓	✓	✓	✓	✓	✓	–	–	–	✓	–	–
Negative speed	–	✓	✓	✓	✓	✓	✓	✓	✓	–	–	–	✓	–	–
Acceleration	–	✓	✓	–	–	–	✓	–	✓	–	–	✓	✓	–	–

33955948/EN – 05/2026

Parameter	FCB														
	02	04	05	06	07	08	09	10	12	13	14	19	20	21	26
Deceleration	✓	✓	✓	–	–	–	✓	–	✓	✓	–	✓	✓	o	✓
Jerk time	✓	✓	✓	–	✓	–	✓	–	✓	✓	✓	✓	✓	o	✓
Torque	✓	✓	✓	✓	✓	✓	✓	✓	✓	✓	✓	✓	✓	o	✓
Apparent output current	✓	✓	✓	✓	✓	✓	✓	✓	✓	✓	✓	✓	✓	✓	✓
Voltage limit	✓	✓	✓	✓	✓	✓	✓	✓	✓	✓	✓	✓	✓	✓	✓
Emergency stop deceleration	–	–	–	–	–	–	–	–	–	–	✓	–	–	–	–

✓ Always active

o Only active if FCB 21 is activated with a rotating drive. With these parameters, the drive is stopped before FCB 21 is executed.

– Inactive

INFORMATION

In the V/f control mode, the "Torque" limit value is not used.

5.5 Drive selection

5.5.1 General information

For drive selection, in addition to the travel diagram that describes the exact travel cycle, a large number of additional specifications must be made about the operating and ambient conditions.

It is first necessary to have data for the machine to be driven such as mass, setting range, information about the mechanical design and so on in order to select the drive correctly. The appropriate drive can be selected with the calculated torques and speeds of the drive while taking other mechanical requirements such as ambient and operating conditions into account.

When selecting the drive, it is necessary to decide whether an asynchronous motor or a synchronous motor is to be used. The extensive product range of SEW-EURODRIVE is available for this purpose.

The basis for motor selection are the limit characteristic curves of the motors in inverter operation. The limit characteristic curve states the torque characteristic of the motor depending on the speed.

The dynamic and thermal limits must be observed when selecting the motor.

5.5.2 General requirements for motors

The technical data of the motors must lie within the following ranges:

Nominal motor speed	0 – 40000 1/min
Nominal motor current	0 – 10000 A
Nominal motor voltage	0 – 2000 V
Nominal motor torque	0 – 50000 Nm

33955948/EN – 05/2026

Rated motor frequency	0 – 600 Hz
Number of pole pairs	1 – 500

Motors that can be connected

Motors that can be connected include:

- Asynchronous motors
- Permanent-field synchronous motors
- Synchronous reluctance motors
- Synchronous motors with LSPM technology[1)]

When third-party motors are operated with inverters, SEW-EURODRIVE cannot ensure that the specified performance data is reached.

1) Guided startup in preparation.

Dielectric strength of the motor

The operation of an AC motor with a frequency inverter places a much greater load on the motor winding than in the case of operation on the supply system. All AC motors from SEW-EURODRIVE have the required voltage endurance.

The connected third-party motor has to be designed in inverter mode for these DC link voltages.

At a line voltage of 3 AC × 400 V, the nominal DC link voltage is DC 560 V. In regenerative operation, the DC link voltage can rise to higher values, see chapter "Technical data" (→ 🗎 44).

At a line voltage of 1 AC × 230 V, the nominal DC link voltage is DC 325 V. In regenerative operation, the DC link voltage can rise to higher values, see chapter "Technical data" (→ 🗎 44).

The inverters pulse the DC voltage of the DC link U_{DC} from the supply cable to the motor. At SEW-EURODRIVE, the pulsed voltage supply is available with 2.5 kHz, 4 kHz, 8 kHz, or 16 kHz. As a result, the motor is loaded with voltage peaks, high amplitude and very short rise times.

For operation of third-party motors on inverters from SEW-EURODRIVE, their suitability must be checked.

Thermal motor protection

Thermal motor protection avoids overheating and, therefore, prevents irreparable damage to the motor. For this purpose, temperature sensors detect the winding temperature. As standard, the inverters can evaluate the following temperature sensors.

Note that the KY/KTY, PK, and PI temperature sensors cannot be connected in series by several motors. For further information, refer to chapter "Group drive and multi-motor drive" (→ 🗎 151).

Motor protection	Number of sensors	SEW-EURODRIVE designation
PTC thermistor	3	TF
Bimetallic temperature switch	3	TH
Semiconductor temperature sensor KTY84-130	1	KY/KTY

33955948/EN – 05/2026

Motor protection	Number of sensors	SEW-EURODRIVE designation
Pt1000 platinum temperature sensor, mounted in winding	1	PK
Pt1000 platinum temperature sensor, mounted in stator housing	1	PI

Motor series	Number of sensors	Motor protection
CM..	KTY84-130 (KY/KTY), Pt1000 (PK)	Comprehensive protection[1)]
	PTC thermistor (TF)	Limited protection[2)]
DR..	PTC thermistor (TF) Bimetallic temperature switch (TH)	Comprehensive protection[3)]
	Semiconductor temperature sensor KTY84-130 (KY/KTY)	Limited protection[4)]
	Pt1000 platinum temperature sensor Mounted in winding (PK)	Limited protection[4)]
	Pt1000 platinum temperature sensor Mounted in stator housing (PI)	Comprehensive protection[1)]
Third-party motors	PTC thermistor, bimetallic temperature switch	Comprehensive protection[3)]
	KTY84-130, Pt1000	Limited protection[4)]

1) Comprehensive protection, as a thermal model protects the winding in addition to the measured value.
2) Depending on the motor size.
3) Comprehensive protection due to one sensor per motor phase.
4) If the temperature measured by the temperature sensor exceeds the limit temperature of the set thermal class of the motor, the inverter issues a fault message. There is no evaluation of the motor model. Thermal overload of windings is possible since the sensor is only installed in one winding.

For additional information on the thermal motor protection, refer to the documentation of the motors.

Thermal motor protection without temperature sensor

Thermal motor protection without temperature sensor is an inverter function that can protect motors without temperature sensors (e.g. PTC thermistors, bimetallic temperature switches) against thermal overload. The level of protection is similar to that of a thermal overload relay. However, the reduced cooling is taken into account, especially at lower speeds.

- Insufficient cooling conditions and increased ambient temperature are influencing factors that cannot be taken into account.
- In the event of overloads in the low speed range, it cannot be ruled out that increased winding temperatures may occur which may damage the winding or lead to premature aging of the motor.
- The cooling of the motor is stronger at low temperatures. A temperature sensor only measures and triggers an overtemperature at increased motor utilization. This increased motor utilization is not possible with thermal motor protection without a sensor.

33955948/EN – 05/2026

This means that thermal motor protection without a temperature sensor only represents basic protection. For complete thermal motor protection, SEW-EURODRIVE recommends using a temperature sensor.

Requirements

The following table shows the prerequisites that must be met in order to be able to use thermal motor protection without a temperature sensor:

Category	Prerequisites
Firmware version	Version 7.0 or later
Motor series	DRN.., DR2S..
Motor size	63 – 132M
Number of poles	4

Boundary conditions

The following table shows the boundary conditions that must be met in order to be able to use thermal motor protection without a temperature sensor:

Category	Boundary conditions
Type of cooling	Fan-cooled
Ambient temperature	-20 – 40 °C
Thermal class of winding	155(F), 180(H)
Installation altitude	<1000 m

For motors with forced cooling fans as well as fan-free and non-ventilated motors, the thermal motor protection must not be used without a temperature sensor.

In the case of multi-motor drives and group drives, as well as third-party motors, it is not possible to use the thermal motor protection without a temperature sensor.

For motors with a speed sensor, SEW-EURODRIVE recommends using a temperature sensor.

Further information

The thermal motor protection without temperature sensor is active as long as the inverter is in operation and supplied with at least DC 24 V.

The thermal motor protection without temperature sensor has no memory, i.e. it does not take the current motor temperature into account after a switch-on/switch-off process. Consequently, avoid subjecting an overheated motor to another overload immediately by switching the inverter off and on. SEW-EURODRIVE recommends performing a fault reset in the event of a fault message of the thermal motor protection without temperature sensor, instead of switching on or off.

5.5.3 Group drive and multi-motor drive

Group drive of asynchronous motors

A group drive is a group of asynchronous motors of any power rating. The motors do not have a rigid mechanical connection or only have a connection that is subject to slip and are connected to an electrically parallel inverter.

Operation of a group drive is only possible in the V/f operating mode.

33955948/EN – 05/2026

Multi-motor drive of asynchronous motors

Multi-motor drive means the electrical parallel connection of several identical asynchronous motors at 1 inverter, that are rigidly and mechanically coupled and drive a load.

Parallel operation of several identical asynchronous motors is possible provided the strict compliance with the following conditions:

- Only use gearmotors of the same type and with the same winding data.
- The rotor position of the individual motors must not differ by more than the following mechanical angle:

$$Z_p \times \Delta\varphi_{mech_max} < 20°$$

Z_p = Number of motor pole pairs

$\Delta\varphi_{mech_max}$ = Maximum torsion angle of the shaft connection in regard of the motor shaft

This must be ensured by the mechanics, even for maximally different torque loads of the motor shafts.

- If encoder feedback is used, just one of the motors needs to be equipped with an encoder. This encoder must be installed on the gearmotor which has the greatest clearance or elasticity with respect to the load inertia.

The multi-motor drive of asynchronous motors is possible in V/f, VFC^{PLUS} and CFC operating modes. The maximum number of motors depends on the control mode:

Control mode	Number of motors
V/f	64
VFC^{PLUS}	10
CFC	10

Temperature evaluation for group and multi-motor drives

Observe the following additional notes for group and multi-motor drives:

- Preferably use bimetallic temperature switches TH.
- The series connection of the TH contacts (normally closed) is not subject to any restriction if joint monitoring is provided.
- If the TF temperature sensors are available in motors, the temperature sensors of up to 3 motors can be connected in series.
- If a motor with MOVILINK® DDI is used, refer to the MOVILINK® DDI product manual.

Permissible cable length for group and multi-motor drives

Observe the permitted length of **all** motor cables connected in parallel:

$$l_{tot} \leq \frac{l_{max}}{n} \qquad l_{tot} = \sum_{i=1}^{n} l_i$$

l_{tot} = Maximum total length of **all** motor cables connected in parallel

l_{max} = Permitted motor cable length

l_i = Cable length of the inverter to the motor

33955948/EN – 05/2026

n = Number of motors connected in parallel

5.5.4 Connecting explosion-protected AC motors

Observe the following information:

- Install the inverter outside the potentially explosive atmosphere.
- Observe industry and country-specific regulations.
- Observe the regulations and information of the motor manufacturer with regard to operation on a frequency inverter, e.g. mandatory sine filter.
- All operating resources used in potentially explosive atmospheres must adhere to the relevant standards, such as Directive 2014/34/EU or IEC 60079.
- The sensor input of the motor's temperature monitoring must not be used in potentially explosive atmospheres. For thermal monitoring, use a monitoring device approved for potentially explosive atmospheres.
- In case of motors with speed feedback, the speed sensor must also be approved for potentially explosive atmospheres. The speed sensor can be directly connected to the inverter.

INFORMATION

For further information, refer to the associated catalogs and the operating instructions of the explosion-protected motors.

5.5.5 General requirements for encoders

Valid motor encoders from SEW-EURODRIVE

The following overview shows the motor encoders that can be used. For respective encoder cables in chapter "Prefabricated cables" (→ 🗎 255).

Encoder designation	Interface/signal type	Interface on the inverter
A...Z, E..Z	MOVILINK® DDI	X16
E..C	HTL	X20:4, X20:5, X20:6
E..R	HTL	X20:4, X20:5, X20:6
EI7C FS[1].	HTL (Functional Safety)	X18

1) Use for control mode not possible, only use for functional safety

X16 is available only in variant ../DI/..

X18 is available only in variant ../CSL/.. and ../CSS/...

The encoder resolution of incremental encoders influences the control quality of speed and position control:

- A simple, non-dynamic positioning can be implemented with HTL encoders with low resolution (e.g. EI7.). In addition, those encoders allow you to inexpensively check whether the motor is turning. These encoders are insufficient for speed control because increased speed noise is expected, especially at low speeds.
- HTL encoders with higher resolution (e.g. EK.C) are suitable for speed control and positioning. SEW-EURODRIVE recommends an encoder resolution of at least 512 lines per revolution for speed control.
- HTL encoders must be supplied with at least DC 24 V. Observe the connection voltage of the encoder.

33955948/EN – 05/2026

Motor and encoder with electronic nameplate

Electronic nameplates can only be evaluated with encoders and motors from SEW-EURODRIVE.

The advantages of the electronic nameplate are:

- Complete and correct identification of motor and gear unit
- Automatic data input
- Easy drive identification, even with drives that are difficult to access
- Significant time savings during startup
- Optional transmission of other drive information such as temperature or vibration data of the motor

5.5.6 General requirements for brake control

Refer to the motor catalogs for extensive information and technical data regarding the brakes.

Brake control

Brakes are controlled via terminal X10 brake output DB0/DB00 on the inverter or via the assigned safe digital output F-DOx (if available) or via MOVILINK® DDI. It is not permitted to control them via other electronic devices or via controllers.

The digital output (DB0; DB00) is designed as an output for operating a relay with protection circuit with a DC 24 V control voltage, a maximum current of 150 mA and a power rating of 3.6 W.

As a result, a power contactor with DC 24 V coil voltage or a suitable brake rectifier from SEW-EURODRIVE can be controlled directly. The brake is switched with this power contactor.

The technical data of the safe digital outputs can be found in chapter "Project planning for functional safety" (→ 🗎 190).

Direct switching of the brake via (DB0; DB00; D-DOx) is not permitted.

Three-wire brake with accelerator coil (BE, BM, BMG)

With this brake type, the brakes are controlled using brake control units.

24 V holding brake (BP, BK)

In every application, a 24 V holding brake can be controlled via a customer relay with varistor overvoltage protection or via the BMV brake control unit from SEW-EURODRIVE.

33955948/EN – 05/2026

Permitted load of brake control and brake

One complete switching sequence (opening and closing) must not be repeated more often than a maximum of every 2 seconds. SEW-EURODRIVE brakes must remain closed for at least 100 ms before they are allowed to be applied again.

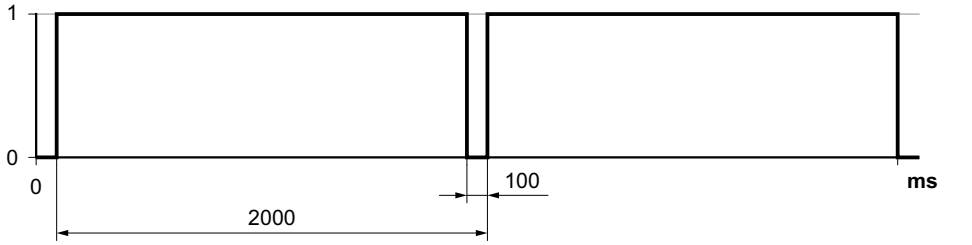

41736392203

5.5.7 Operation in noise-sensitive environments

Consider the following points to realize the quietest possible operation:

- Gearmotor
- Motor control

  Noise is generated in the filter during operation with HF.. output filter depending on the clock frequency. In environments susceptible to noise, SEW-EURODRIVE recommends increasing the clock frequency. This must be taken into account when designing the inverter.
- Regenerative operation (low-noise braking resistor, regenerative power supply)

5.6 Recommendations for motor and inverter selection

5.6.1 Limit characteristic curves of the motors in inverter operation

The basis for motor selection are the limit characteristic curves of the motors in inverter operation. The limit characteristic curve states the torque characteristic of the motor depending on the speed.

The dynamic and thermal limits must be observed when selecting the motor.

5.6.2 Thermal limit characteristic curve

The mean motor speed and the effective torque are calculated during drive selection to determine the thermal loading of the motor. The operating point of the motor must be below the limit characteristic curve of the motor, otherwise the motor will be thermally overloaded.

5.6.3 Dynamic limit characteristic curve

The dynamic limit characteristic curve depicts the maximum torque the motor can generate at a certain speed. Note that the inverter must supply sufficient current for the motor to reach its maximum torque.

Motor-specific limit characteristic curves are included in the SEW-Workbench project planning tool or in the online characteristic curve generator in Online Support at www.seweurodrive.com.

For more information on the project planning of drives, refer to the corresponding catalogs of the respective motors.

33955948/EN – 05/2026

You can also find help with drive project planning in the "Drive technology practice/ project planning" documentation.

5.6.4 Asynchronous motors in VFC^{PLUS} control mode

In VFC^{PLUS} control mode **without encoder** , the entire speed range of the drive can be used dynamically.

However, continuous operation of asynchronous motors without encoder at low speeds is not possible. The minimum speeds that must not be permanently undercut during operation without encoder are:

- Motoring operation: 1% of the asynchronous motor nominal speed
- Regenerative operation: 10% of the asynchronous motor nominal speed

The described restrictions do not apply in the VFC^{PLUS} control mode **with encoder**. In comparison to operation without encoder, higher dynamic properties can be achieved with an encoder. The maximum dynamics of the speed control loop are reached with a high-resolution encoder. The speed setting range depends heavily on the encoder system used.

5.6.5 Synchronous reluctance motors in VFC^{PLUS} control mode

In VFC^{PLUS} control mode **without encoder** , the entire speed range of the drive can be used dynamically.

However, continuous operation of synchronous reluctance motors without encoder at low speeds is not possible. The speed setting range is 1:50.

The described restrictions do not apply in the VFC^{PLUS} control mode **with encoder**. In comparison to operation without encoder, higher dynamic properties can be achieved with an encoder. The maximum dynamics of the speed control loop are reached with a high-resolution encoder. The speed setting range depends heavily on the encoder system used.

5.6.6 Asynchronous motors in CFC control mode

In comparison to the VFC^{PLUS} control mode, higher dynamic properties can be achieved using CFC. The full motor magnetization is maintained in each operating state, so that the highest dynamic requirements are met. Due to the voltage reserves required for this, standard asynchronous motors are operated with a lower base speed in this operating mode than in the VFC^{PLUS} operating mode. Power yield and energy efficiency are consequently lower. The maximum dynamics of the speed control loop are reached with a high-resolution encoder. The speed setting range depends heavily on the encoder system used.

5.6.7 Synchronous motors in CFC control mode

The permanent magnets increase the voltage induced in the winding of the motor as the speed increases. This limits the amount of the current that can be injected, as only the difference between the voltage in the DC link of the inverter and the induced voltage is available as the voltage. When the voltage limit is reached, the torque drops

33955948/EN – 05/2026

at higher speeds. To enable operation to the right of the voltage limit characteristic curve, a field-weakening current must be injected. The field weakening function (in preparation) is active by default. Note that the required current for the same torque is significantly higher in field weakening.

SEW-EURODRIVE recommends a PWM frequency of 8 kHz or 16 kHz for the following motors:

- CMP40/..50/..63 for speeds above 4500 min^{-1}
- CMP71/..80/..100 for speeds above 3000 min^{-1}
- CM3C63/..71/..80/..100 for speeds above 3000 min^{-1}
- CM3P71/..80/..100 for speeds above 2000 min^{-1}

SEW-EURODRIVE recommends using the following temperature sensors:

- KTY84-130 (SEW-EURODRIVEdesignation: KY)
- Pt1000 (SEW-EURODRIVE designation: PK)

5.6.8 Synchronous motors in ELSM® control mode

Since no encoder system is used for motor control in ELSM® control mode, control mode-specific restrictions arise compared to operation in CFC control mode with a motor encoder.

Up to the transition speed, the control mode in open-loop operation only works in open-loop speed control. Above the transition speed, the control mode operates in closed-loop operation and is comparable to the CFC control mode with a resolver. The speed setting range is 1:50. Since no encoder system is used in ELSM® control mode, the absolute position of the motor shaft is initially unknown. This is why it is determined by test pulses every time the device is enabled. This results in a start delay of 25 ms.

When starting up from idle state, the device first starts up in open-loop operation. Regardless of the load for stabilizing the drive, the start-up in open-loop operation takes place with a current injection of 150% of the nominal current of the motor in operation. In idle state with zero speed, a current of 120% of the nominal current of the motor in operation is injected.

If the current cannot be provided by the inverter, the current is limited to the thermal current limit of the inverter. This results in restrictions in relation to the usable torque in open-loop operation.

As soon as the transition speed is reached, the operation switches to closed-loop mode. The transition speed is approximately 2% of the nominal speed of the motor in operation. In controlled operation, the absolute position of the motor shaft is then derived from various measured variables. In closed-loop operation, the usable dynamic torque depends on both the motor as well as on the motor/inverter combination.

If the speed falls below the transition speed again, the inverter switches from closed-loop to open-loop operation. This means that open-loop operation is always active at the start of acceleration, but also at the end of a deceleration, as soon as the transition speed is undershot. Open-loop operation may only be passed through. Permanent open-loop operation below the transition speed is not permitted.

Switching to a rotating motor is possible. A restart is also possible if the drive has not yet reached speed 0.

Depending on whether the control mode is in open-loop or closed-loop operation, various limit values must be checked for drive project planning in order to be able to make a statement about whether the motor can provide the required torques.

We recommend using the SEW-Workbench project planning software for project planning.

33955948/EN – 05/2026

The permanent magnets increase the voltage induced in the winding of the motor as the speed increases. This limits the amount of the current that can be injected, as only the difference between the voltage in the DC link of the inverter and the induced voltage is available as the voltage. When the voltage limit is reached, the torque drops at higher speeds. To enable operation to the right of the voltage limit characteristic curve, a field-weakening current must be injected. The field weakening function (in preparation) is active by default. Note that the required current for the same torque is significantly higher in field weakening.

SEW-EURODRIVE recommends a PWM frequency of 8 kHz or 16 kHz for the following motors:

- CMP40/..50/..63 for speeds above 4500 min^{-1}
- CMP71/..80/..100 for speeds above 3000 min^{-1}
- CM3C63/..71/..80/..100 for speeds above 3000 min^{-1}
- CM3P71/..80/..100 for speeds above 2000 min^{-1}

SEW-EURODRIVE recommends using the following temperature sensors:

- KTY84-130 (SEW-EURODRIVEdesignation: KY)
- Pt1000 (SEW-EURODRIVE designation: PK)

Limitations

The following control mode-specific application restrictions apply to ELSM® control mode:

- The maximum permitted mass inertia ratio between external and internal inertia is 50.
- Group and multi-motor operation (parallel connection of several motors on one inverter) is not supported.
- It is not recommended to operate several coupled motors with their own inverters that act on the same load and work against each other.
- All applications that require continuous operation below the transition speed (2%) in the open-loop range are not permitted.
- Torque control below the transition speed (2%) in controlled operation is not possible.
- For hoists and hoist-like applications, such as horizontal applications that are subject to external loads, the static load torque on the motor shaft must not exceed 100% of the nominal motor torque.
- Note that for applications that are subject to external loads, such as hoists, ascending conveyors and the like, it that the motor shaft can move by 0.1 revolutions in the load direction. The drive may sag briefly.

Recommended ratio of nominal inverter current to nominal motor current:

- For applications that are **not** subjected to external loads:
  - MOVITRAC® advanced/classic 1:1
  - MOVIDRIVE® system/technology 1:1
  - MOVIDRIVE® modular 1:1
- For applications that are subjected to external loads (hoists and hoist-like applications):
  - MOVITRAC® advanced/classic 1.6:1
  - MOVIDRIVE® system/technology 1.2:1
  - MOVIDRIVE® modular 1:1

33955948/EN – 05/2026

5.7 Motor/inverter characteristic curves

For motor/inverter characteristic curves, refer to the SEW-EURODRIVE website.

5.8 Inverter selection

5.8.1 General information

The inverter is selected based on the course of the output current over time. The required current has to be determined from the required torque characteristic of the connected motor.

The inverters are dimensioned for a nominal output current I_N. In many applications, there is a demand for short-time overload operation. For this purpose, the inverters can be operated with a higher nominal output current for a short period of time.

For overload operation, make sure that the inverter is not thermally overloaded. For protection of the power components, inverters have various monitoring mechanisms.

The following thermal monitoring functions are available:

- Dynamic utilization

  The periodic current load of the switching power semiconductors lets them heat and cool down cyclically. Due to the different thermal time constants, large temperature differences can occur between the power semiconductors and the heat sink. Dynamic utilization monitors the permitted temperature of the barrier layer of the power semiconductors.

- Thermal utilization

  The power semiconductors are limited by the maximum permitted temperature during operation. Thermal utilization monitors the heat sink temperature of the power semiconductors.

- Electromechanical utilization (I^2t utilization)

  Electromechanical utilization protects the components that have a large thermal time constant compared to the power semiconductors.

Due to the complexity of the utilization curves, the calculation can only be performed using software. The SEW-Workbench software offers support for dimensioning an inverter.

For a rough selection of the inverter without using software, characteristic load cycles are provided in the following subchapters.

5.8.2 Overload capacity

Load cycle with base load current – typical for the selection of asynchronous motors and servomotors

The characteristic load cycle consists of a base load and an overload period. In the base load period, the output current must not exceed the specified value. After the base load period, overload is possible again.

33955948/EN – 05/2026

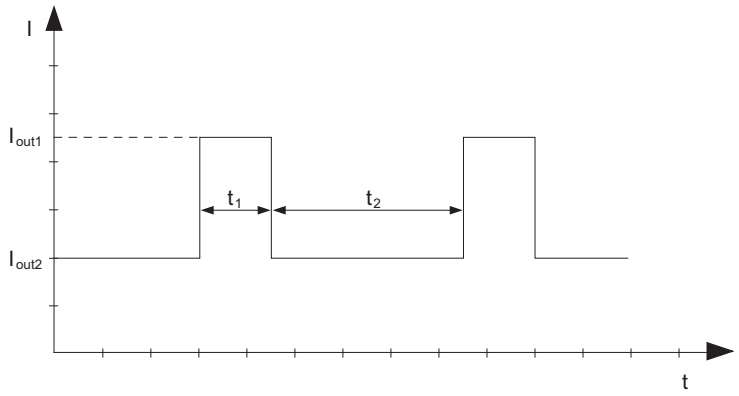

18014415982173963

Examples of permitted current profiles

Overload capacity with the smallest possible f_{PWM}, $f_A \geq 3$ Hz, $T_U \leq 40$ °C

Overload current $I_{out\,1}/I_N$	Overload time t_1	Base load current $I_{out\,2}/I_N$	Required pause interval t_2
150%	30 s	50%	150 s

5.8.3 Power reduction factors

Due to the following operating and ambient conditions, a reduction of the output current may be necessary.

Derating due to the rotary field frequency

The specified nominal output current I_N of the inverter is the effective value. The increased load on the power semiconductors has to be considered especially for slow rotating fields and rotating fields at standstill. In case of a rotating field at standstill, direct current that can correspond to the peak value of the sine current depending on the phase position is flowing.

It is particularly important to consider output frequencies $f_A < 3$ Hz.

Up to size 7 MCX91A-2500..	From size 7 MCX91A-3000..
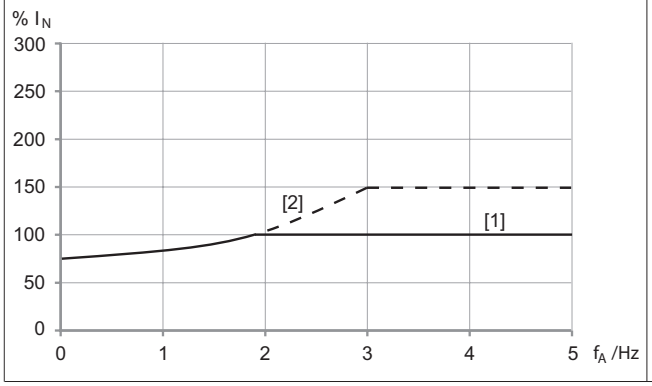	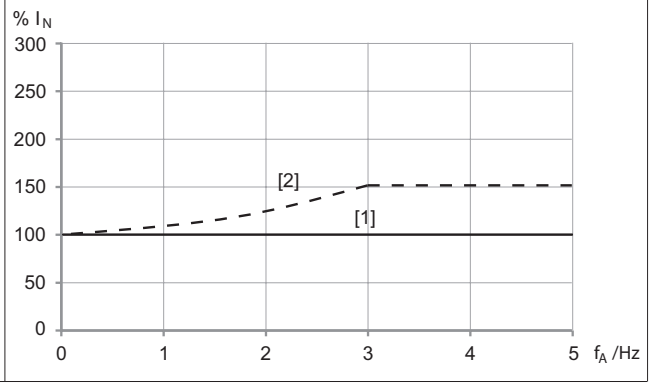

[1] Continuous output current I_{Cont} at the smallest possible PWM frequency

[2] Time-limited overload current

33955948/EN – 05/2026

Derating due to the installation altitude

Frequency inverters by SEW-EURODRIVE are designed for overvoltage category III and for altitudes up to 2000 m according to EN 61800-5-1. The air pressure and the air density decrease depending on the installation altitude. This leads to a reduced cooling capacity and to a reduced electrical isolation effect of the air.

No restrictions apply to altitudes < 1000 m.

The following restrictions apply to altitudes ≥ 1000 m:

- From 1000 m to max. 3800 m: I_N reduction by 1% per 100 m
- From 2000 m to max. 3800 m: To maintain protective separation and the air gaps and creepage distances according to EN 61800-5-1, an overvoltage protection device must be connected upstream to reduce the overvoltages from category III to category II.

Derating of the output current due to line voltage, ambient temperature, and PWM frequency

INFORMATION

Interpolate linearly for voltages between 400 V and 500 V.

The following table shows the values for derating as a function of the line voltage V_{line} and ambient temperature T > 40 °C. For ambient temperatures ≤ 40 °C, the value 40 °C applies.

I_{cont}	Continuous output current
I_{nom}	Nominal output current
T	Ambient temperature

MOVITRAC® advanced, 3-phase

Inverter	f_{PWM}	Continuous current I_{cont}	
		V_{line}: 3 × 400 V	V_{line}: 3 x 500 V
Size 0S ≤ 2.5 A	4 kHz	$\frac{I_{cont}}{I_{nom}} = 100\% - (T - 40\,°C) \times 4\%$ Operation up to max. 50 °C	$\frac{I_{cont}}{I_{nom}} = 75\%$ Operation up to max. 40 °C
	8 kHz	$\frac{I_{cont}}{I_{nom}} = 75\% - (T - 40\,°C) \times 3\%$ Operation up to max. 50 °C	Not possible
	16 kHz	$\frac{I_{cont}}{I_{nom}} = 45\%$ Operation up to max. 40 °C	Not possible
Size 0S ≥ 3.2 A	4 kHz	$\frac{I_{cont}}{I_{nom}} = 100\% - (T - 40\,°C) \times 2.7\%$ Operation up to max. 55 °C	$\frac{I_{cont}}{I_{nom}} = 80\% - (T - 40\,°C) \times 2.2\%$ Operation up to max. 55 °C
	8 kHz	$\frac{I_{cont}}{I_{nom}} = 75\% - (T - 40\,°C) \times 2.5\%$ Operation up to max. 55 °C	$\frac{I_{cont}}{I_{nom}} = 60\% - (T - 40\,°C) \times 1.9\%$ Operation up to max. 55 °C
	16 kHz	$\frac{I_{cont}}{I_{nom}} = 50\% - (T - 40\,°C) \times 2\%$ Operation up to max. 50 °C	Not possible

Inverter	f_{PWM}	Continuous current I_{cont}	
		V_{line}: 3 × 400 V	V_{line}: 3 x 500 V
Size 0L ≤ 12.5 A	4 kHz	$\frac{I_{cont}}{I_{nom}} = 100\ \% - (T - 40\ °C) \times 2.5\ \%$ Operation up to max. 55 °C	$\frac{I_{cont}}{I_{nom}} = 92\% - (T - 40\ °C) \times 2.3\%$ Operation up to max. 55 °C
	8 kHz	$\frac{I_{cont}}{I_{nom}} = 75\% - (T - 40\ °C) \times 1.9\%$ Operation up to max. 55 °C	$\frac{I_{cont}}{I_{nom}} = 65\% - (T - 40\ °C) \times 1.6\%$ Operation up to max. 55 °C
	16 kHz	$\frac{I_{cont}}{I_{nom}} = 50\% - (T - 40\ °C) \times 1.8\%$ Operation up to max. 55 °C	$\frac{I_{cont}}{I_{nom}} = 34\% - (T - 40\ °C) \times 1.2\%$ Operation up to max. 50 °C
Size 0L 16 A	4 kHz	$\frac{I_{cont}}{I_{nom}} = 100\ \% - (T - 40\ °C) \times 2.5\ \%$ Operation up to max. 55 °C	$\frac{I_{cont}}{I_{nom}} = 91\% - (T - 40\ °C) \times 2.3\%$ Operation up to max. 55 °C
	8 kHz	$\frac{I_{cont}}{I_{nom}} = 75\% - (T - 40\ °C) \times 2.3\%$ Operation up to max. 55 °C	$\frac{I_{cont}}{I_{nom}} = 65\% - (T - 40\ °C) \times 1.8\%$ Operation up to max. 55 °C
	16 kHz	$\frac{I_{cont}}{I_{nom}} = 50\% - (T - 40\ °C) \times 2.5\%$ Operation up to max. 50 °C	$\frac{I_{cont}}{I_{nom}} = 35\% - (T - 40\ °C) \times 1.8\%$ Operation up to max. 50 °C
Size 3	4 kHz	$\frac{I_{cont}}{I_{nom}} = 100\ \% - (T - 40\ °C) \times 2.0\ \%$	$\frac{I_{cont}}{I_{nom}} = 91\% - (T - 40\ °C) \times 1.85\%$
	8 kHz	$\frac{I_{cont}}{I_{nom}} = 75\% - (T - 40\ °C) \times 1.7\%$	$\frac{I_{cont}}{I_{nom}} = 65\% - (T - 40\ °C) \times 1.5\%$
	16 kHz	$\frac{I_{cont}}{I_{nom}} = 50\% - (T - 40\ °C) \times 1.2\%$	$\frac{I_{cont}}{I_{nom}} = 40\% - (T - 40\ °C) \times 1.35\%$
Size 4	4 kHz	$\frac{I_{cont}}{I_{nom}} = 100\ \% - (T - 40\ °C) \times 2.0\ \%$	$\frac{I_{cont}}{I_{nom}} = 91\% - (T - 40\ °C) \times 1.85\%$
	8 kHz	$\frac{I_{cont}}{I_{nom}} = 75\% - (T - 40\ °C) \times 1.7\%$	$\frac{I_{cont}}{I_{nom}} = 65\% - (T - 40\ °C) \times 1.5\%$
	16 kHz	$\frac{I_{cont}}{I_{nom}} = 50\% - (T - 40\ °C) \times 1.2\%$	$\frac{I_{cont}}{I_{nom}} = 40\% - (T - 40\ °C) \times 1.35\%$
Size 5	4 kHz	$\frac{I_{cont}}{I_{nom}} = 100\ \% - (T - 40\ °C) \times 2.0\ \%$	$\frac{I_{cont}}{I_{nom}} = 91\% - (T - 40\ °C) \times 1.85\%$
	8 kHz	$\frac{I_{cont}}{I_{nom}} = 75\% - (T - 40\ °C) \times 1.7\%$	$\frac{I_{cont}}{I_{nom}} = 65\% - (T - 40\ °C) \times 1.5\%$
	16 kHz	$\frac{I_{cont}}{I_{nom}} = 42\% - (T - 40\ °C) \times 1.3\%$	$\frac{I_{cont}}{I_{nom}} = 34\% - (T - 40\ °C) \times 1.3\%$
Size 6	4 kHz	$\frac{I_{cont}}{I_{nom}} = 100\ \% - (T - 40\ °C) \times 2.0\ \%$	$\frac{I_{cont}}{I_{nom}} = 91\% - (T - 40\ °C) \times 1.85\%$
	8 kHz	$\frac{I_{cont}}{I_{nom}} = 75\% - (T - 40\ °C) \times 1.7\%$	$\frac{I_{cont}}{I_{nom}} = 65\% - (T - 40\ °C) \times 1.5\%$
	16 kHz	$\frac{I_{cont}}{I_{nom}} = 50\% - (T - 40\ °C) \times 1.2\%$	$\frac{I_{cont}}{I_{nom}} = 40\% - (T - 40\ °C) \times 1.35\%$

33955948/EN – 05/2026

Inverter	f_{PWM}	Continuous current I_{cont}	
		V_{line}: 3 × 400 V	V_{line}: 3 x 500 V
Size 7 MCX91A-2200-503-4.. – MCX91A-2500-503-4..	4 kHz	$\frac{I_{cont}}{I_{nom}} = 100\% - (T - 40\ °C) \times 2.6\%$	$\frac{I_{cont}}{I_{nom}} = 91\% - (T - 40\ °C) \times 2.4\%$
	8 kHz	$\frac{I_{cont}}{I_{nom}} = 70\% - (T - 40\ °C) \times 2.1\%$	$\frac{I_{cont}}{I_{nom}} = 63\% - (T - 40\ °C) \times 1.9\%$
Size 7 MCX91-3000-503-4..	2.5 kHz	$\frac{I_{cont}}{I_{nom}} = 100\% - (T - 40\ °C) \times 2.05\%$	$\frac{I_{cont}}{I_{nom}} = 91\% - (T - 40\ °C) \times 1.9\%$
	4 kHz	$\frac{I_{cont}}{I_{nom}} = 87\% - (T - 40\ °C) \times 1.9\%$	$\frac{I_{cont}}{I_{nom}} = 79\% - (T - 40\ °C) \times 1.75\%$
	8 kHz	$\frac{I_{cont}}{I_{nom}} = 60\% - (T - 40\ °C) \times 1.55\%$	$\frac{I_{cont}}{I_{nom}} = 54\% - (T - 40\ °C) \times 1.4\%$
Size 8 MCX91A-3800-503-4.. – MCX91A-5880-503-4..	2.5 kHz	$\frac{I_{cont}}{I_{nom}} = 100\% - (T - 40\ °C) \times 1.75\%$	$\frac{I_{cont}}{I_{nom}} = 98\% - (T - 40\ °C) \times 1.85\%$
	4 kHz	$\frac{I_{cont}}{I_{nom}} = 86\% - (T - 40\ °C) \times 1.65\%$	$\frac{I_{cont}}{I_{nom}} = 80\% - (T - 40\ °C) \times 1.65\%$

Inverter	f_{PWM}	Continuous current I_{cont}
		V_{line}: 3 × 230 V
Size 0S MCX91A-0017-2E3-4.. – MCX91A-0025-2E3-4..	4 kHz	$\frac{I_{cont}}{I_{nom}} = 100\% - (T - 40\ °C) \times 4\%$ Operation up to max. 50 °C
	8 kHz	$\frac{I_{cont}}{I_{nom}} = 75\% - (T - 40\ °C) \times 2.7\%$ Operation up to max. 50 °C
	16 kHz	$\frac{I_{cont}}{I_{nom}} = 48\%$ Operation up to max. 40 °C
Size 0S MCX91A-0034-2E3-4.. – MCX91A-0055-2E3-4..	4 kHz	$\frac{I_{cont}}{I_{nom}} = 100\% - (T - 40\ °C) \times 2.67\%$
	8 kHz	$\frac{I_{cont}}{I_{nom}} = 75\% - (T - 40\ °C) \times 2\%$
	16 kHz	$\frac{I_{cont}}{I_{nom}} = 50\% - (T - 40\ °C) \times 1.33\%$
Size 0L	4 kHz	$\frac{I_{cont}}{I_{nom}} = 100\ \% - (T - 40\ °C) \times 2.0\ \%$
	8 kHz	$\frac{I_{cont}}{I_{nom}} = 75\% - (T - 40\ °C) \times 1.7\%$
	16 kHz	$\frac{I_{cont}}{I_{nom}} = 50\% - (T - 40\ °C) \times 1.2\%$

33955948/EN – 05/2026

Inverter	f_{PWM}	Continuous current I_{cont}
		V_{line}: 3 × 230 V
Size 3	4 kHz	$\frac{I_{cont}}{I_{nom}} = 100\ \% - (T - 40\ °C) \times 2.0\ \%$
	8 kHz	$\frac{I_{cont}}{I_{nom}} = 75\% - (T - 40\ °C) \times 1.7\%$
	16 kHz	$\frac{I_{cont}}{I_{nom}} = 50\% - (T - 40\ °C) \times 1.2\%$
Size 4	4 kHz	$\frac{I_{cont}}{I_{nom}} = 100\ \% - (T - 40\ °C) \times 2.0\ \%$
	8 kHz	$\frac{I_{cont}}{I_{nom}} = 75\% - (T - 40\ °C) \times 1.7\%$
	16 kHz	$\frac{I_{cont}}{I_{nom}} = 50\% - (T - 40\ °C) \times 1.2\%$
Size 5	4 kHz	$\frac{I_{cont}}{I_{nom}} = 100\ \% - (T - 40\ °C) \times 2.0\ \%$
	8 kHz	$\frac{I_{cont}}{I_{nom}} = 75\% - (T - 40\ °C) \times 1.7\%$
	16 kHz	$\frac{I_{cont}}{I_{nom}} = 50\ \% - (T - 40\ °C) \times 1.3\ \%$
Size 6	4 kHz	$\frac{I_{cont}}{I_{nom}} = 100\ \% - (T - 40\ °C) \times 2.0\ \%$
	8 kHz	$\frac{I_{cont}}{I_{nom}} = 75\% - (T - 40\ °C) \times 1.7\%$
	16 kHz	$\frac{I_{cont}}{I_{nom}} = 50\% - (T - 40\ °C) \times 1.2\%$

MOVITRAC® advanced, 1-phase

Inverter	f_{PWM}	Continuous current I_{cont}
		V_{line}: 1 × 230 V
Size 0S ≤ 3.4 A	4 kHz 8 kHz	$\frac{I_{cont}}{I_{nom}} = 100\ \% - (T - 40\ °C) \times 2.2\ \%$ Operation up to max. 50 °C
	16 kHz	$\frac{I_{cont}}{I_{nom}} = 68\ \%$ Operation up to max. 50 °C

33955948/EN – 05/2026

Inverter	f_{PWM}	Continuous current I_{cont}
		V_{line}: 1 × 230 V
Size 0S 4.2 A	4 kHz	$\frac{I_{cont}}{I_{nom}} = 100\ \% - (T - 40\ °C) \times 1.3\ \%$ Operation up to max. 55 °C
	8 kHz	$\frac{I_{cont}}{I_{nom}} = 100\% - (T - 40\ °C) \times 2.7\%$ Operation up to max. 55 °C
	16 kHz	$\frac{I_{cont}}{I_{nom}} = 70\% - (T - 40\ °C) \times 2.9\%$ Operation up to max. 55 °C
Size 0L ≤ 9.3 A	4 kHz	$\frac{I_{cont}}{I_{nom}} = 100\% - (T - 40\ °C) \times 1.7\%$ Operation up to max. 55 °C
	8 kHz	$\frac{I_{cont}}{I_{nom}} = 87\% - (T - 40\ °C) \times 1.9\%$ Operation up to max. 55 °C
	16 kHz	$\frac{I_{cont}}{I_{nom}} = 50\%$ Operation up to max. 50 °C
Size 0L 11 A	4 kHz	$\frac{I_{cont}}{I_{nom}} = 100\ \% - (T - 40\ °C) \times 2.5\ \%$ Operation up to max. 55 °C
	8 kHz	$\frac{I_{cont}}{I_{nom}} = 100\% - (T - 40\ °C) \times 4.1\%$ Operation up to max. 55 °C
	16 kHz	$\frac{I_{cont}}{I_{nom}} = 76\% - (T - 40\ °C) \times 0.9\%$ Operation up to max. 50 °C

Derating of the cable length due to line voltage, ambient temperature, and PWM frequency

The following tables show the values for the derating of the cable length due to line voltage V_{line}, ambient temperature T (at T > 40°C), and PWM frequency f_{PWM}:

L	Cable length after derating
$L_{4\ kHz}$	Maximum motor cable length at f_{PWM} = 4 kHz, see chapter "Motor cable" (→ 🗎 176)
T	Ambient temperature

33955948/EN – 05/2026

MOVITRAC® advanced, 3-phase

Inverter	f_{PWM}	Cable length L in m	
		V_{line}: 3 × 400 V	V_{line}: 3 × 500 V
Size 0S ≤ 2.5 A	4 kHz	$\frac{L}{L_{4\,kHz}} = 100\,\% - (T - 40\,°C) \times 5.5\,\%$ Operation up to max. 50 °C	$\frac{L}{L_{4\,kHz}} = 50\,\%$ Operation up to max. 40 °C
	8 kHz	$\frac{L}{L_{4\,kHz}} = 50\,\% - (T - 40\,°C) \times 3.4\,\%$ Operation up to max. 50 °C	Not possible
	16 kHz	$\frac{L}{L_{4\,kHz}} = 16\,\%$ Operation up to max. 40 °C	Not possible
Size 0S ≥ 3.2 A	4 kHz	$\frac{L}{L_{4\,kHz}} = 100\,\% - (T - 40\,°C) \times 3.7\,\%$ Operation up to max. 55 °C	$\frac{L}{L_{4\,kHz}} = 40\,\% - (T - 40\,°C) \times 1.5\,\%$ Operation up to max. 55 °C
	8 kHz	$\frac{L}{L_{4\,kHz}} = 70\,\% - (T - 40\,°C) \times 2.6\,\%$ Operation up to max. 55 °C	$\frac{L}{L_{4\,kHz}} = 21\,\% - (T - 40\,°C) \times 0.8\,\%$ Operation up to max. 55 °C
	16 kHz	$\frac{L}{L_{4\,kHz}} = 40\,\% - (T - 40\,°C) \times 2.8\,\%$ Operation up to max. 50 °C	Not possible
Size 0L ≤ 12.5 A	4 kHz	$\frac{L}{L_{4\,kHz}} = 100\,\%$ Operation up to max. 55 °C	
	8 kHz	$\frac{L}{L_{4\,kHz}} = 75\,\%$ Operation up to max. 55 °C	
	16 kHz	$\frac{L}{L_{4\,kHz}} = 50\,\% - (T - 40\,°C) \times 1.8\,\%$ Operation up to max. 55 °C	$\frac{L}{L_{4\,kHz}} = 39\,\% - (T - 40\,°C) \times 1.4\,\%$ Operation up to max. 50 °C
Size 0L 16 A	4 kHz	$\frac{L}{L_{4\,kHz}} = 100\,\%$ Operation up to max. 55 °C	
	8 kHz	$\frac{L}{L_{4\,kHz}} = 75\,\% - (T - 40\,°C) \times 1.0\,\%$ Operation up to max. 55 °C	$\frac{L}{L_{4\,kHz}} = 75\,\% - (T - 40\,°C) \times 1.0\,\%$ Operation up to max. 50 °C
	16 kHz	$\frac{L}{L_{4\,kHz}} = 50\,\% - (T - 40\,°C) \times 2.5\,\%$ Operation up to max. 55 °C	$\frac{L}{L_{4\,kHz}} = 25\,\% - (T - 40\,°C) \times 1.3\,\%$ Operation up to max. 50 °C

33955948/EN – 05/2026

Inverter	f_{PWM}	Cable length L in m
		V_{line}: 3 × 230 V
Size 0S ≤ 2.5 A	4 kHz	$\frac{L}{L_{4\,kHz}} = 100\,\% - (T - 40\,°C) \times 5.5\,\%$ Operation up to max. 50 °C
	8 kHz	$\frac{L}{L_{4\,kHz}} = 50\,\% - (T - 40\,°C) \times 3.4\,\%$ Operation up to max. 50 °C
	16 kHz	$\frac{L}{L_{4\,kHz}} = 16\,\%$ Operation up to max. 40 °C
Size 0S ≥ 3.4 A	4 kHz	$\frac{L}{L_{4\,kHz}} = 100\,\% - (T - 40\,°C) \times 3.7\,\%$ Operation up to max. 55 °C
	8 kHz	$\frac{L}{L_{4\,kHz}} = 70\,\% - (T - 40\,°C) \times 2.6\,\%$ Operation up to max. 55 °C
	16 kHz	$\frac{L}{L_{4\,kHz}} = 40\,\% - (T - 40\,°C) \times 2.8\,\%$ Operation up to max. 50 °C
Size 0L ≤ 9.3 A	4 kHz	$\frac{L}{L_{4\,kHz}} = 100\,\%$ Operation up to max. 55 °C
	8 kHz	$\frac{L}{L_{4\,kHz}} = 75\,\%$ Operation up to max. 55 °C
	16 kHz	$\frac{L}{L_{4\,kHz}} = 50\,\% - (T - 40\,°C) \times 1.8\,\%$ Operation up to max. 55 °C
Size 0L 14 A	4 kHz	$\frac{L}{L_{4\,kHz}} = 100\,\%$ Operation up to max. 55 °C
	8 kHz	$\frac{L}{L_{4\,kHz}} = 75\,\% - (T - 40\,°C) \times 1.0\,\%$ Operation up to max. 55 °C
	16 kHz	$\frac{L}{L_{4\,kHz}} = 50\,\% - (T - 40\,°C) \times 2.5\,\%$ Operation up to max. 50 °C

33955948/EN – 05/2026

MOVITRAC® advanced, 1-phase

Inverter	f_{PWM}	Cable length L in m
		V_{line}: 1 × 230 V
Size 0S ≤ 3.4 A	4 kHz	$\frac{L}{L_{4\,kHz}} = 100\,\% - (T - 40\,°C) \times 2.2\,\%$ Operation up to max. 55 °C
	8 kHz	$\frac{L}{L_{4\,kHz}} = 46\,\% - (T - 40\,°C) \times 1.2\,\%$ Operation up to max. 50 °C
	16 kHz	$\frac{L}{L_{4\,kHz}} = 29\,\% - (T - 40\,°C) \times 1.8\,\%$ Operation up to max. 50 °C
Size 0S 4.2 A	4 kHz	$\frac{L}{L_{4\,kHz}} = 100\,\% - (T - 40\,°C) \times 2.0\,\%$ Operation up to max. 55 °C
	8 kHz	$\frac{L}{L_{4\,kHz}} = 100\,\% - (T - 40\,°C) \times 1.4\,\%$ Operation up to max. 55 °C
	16 kHz	$\frac{L}{L_{4\,kHz}} = 70\,\% - (T - 40\,°C) \times 1.0\,\%$ Operation up to max. 55 °C
Size 0L ≤ 9.3 A	4 kHz	$\frac{L}{L_{4\,kHz}} = 100\,\%$ Operation up to max. 55 °C
	8 kHz	$\frac{L}{L_{4\,kHz}} = 100\,\%$ Operation up to max. 55 °C
	16 kHz	$\frac{L}{L_{4\,kHz}} = 70\,\% - (T - 40\,°C) \times 2.1\,\%$ Operation up to max. 50 °C
Size 0L 11 A	4 kHz	$\frac{L}{L_{4\,kHz}} = 100\,\%$ Operation up to max. 55 °C
	8 kHz	$\frac{L}{L_{4\,kHz}} = 100\,\% - (T - 40\,°C) \times 1.7\,\%$ Operation up to max. 55 °C
	16 kHz	$\frac{L}{L_{4\,kHz}} = 50\,\%$ Operation up to max. 55 °C

33955948/EN – 05/2026

5.9 Braking resistor selection

5.9.1 General information

Using a braking resistor is only required if generator mode is reached during operation. A braking resistor is not required if the device is operated solely in motor mode.

5.9.2 Derating due to the ambient temperature

The following derating applies at ambient temperatures of > 40 °C:

- Reduction of the continuous power by 4% per 10 K
- Reduction of the tripping current by 2% per 10 K

Do not exceed a maximum ambient temperature of 60 °C.

5.9.3 Selection criteria

The braking resistor is selected in the SEW Workbench. The necessary selection parameters for the braking resistor are calculated during the project planning procedure. Depending on these selection parameters, a braking resistor is selected from the table.

The selection parameters in the following sections are the basis for selecting the braking resistor.

Continuous braking power

The minimum required continuous braking power (braking power at 100% cdf) of the braking resistor for load cycles can be calculated using the relative cyclic duration factor cdf and the overload factor k.

If the cyclic duration factor cdf is unknown, it can be calculated from the cycle duration t_{tot} and the braking time t_B using the following formula.

$$cdf = \frac{t_B}{t_{tot}} \text{ x } 100\ \%$$

9007219434171531

cdf	Cyclic duration factor
t_B	Braking time
t_{tot}	Cycle duration

INFORMATION

The cycle duration must not exceed 120 s.

The overload factor k can be determined using the diagrams in chapter "Overload factor k" (→ 🗎 170) and the cyclic duration factor cdf.

The value of the average braking power P_B is taken from the project planning data of the application.

$$P_B = \frac{\sum_{i=1}^{n} P_i}{\sum_{i=1}^{n} t_i}$$

9007219434177547

P_B Average braking power
P_i Braking power section i
t_i Braking time section i
n Number of braking sections

The minimum required braking power at 100% cdf is calculated using the following formula:

$$P_{100\%ED} = \frac{P_B}{k}$$

20179441035

$P_{100\%cdf}$ Braking power at 100% cdf
P_B Average braking power
k Overload factor

The braking power required by the application at 100% cdf must be smaller than or equal to the typical braking power at 100% cdf (continuous braking power) of the braking resistor.

Overload factor k

Flatpack resistors

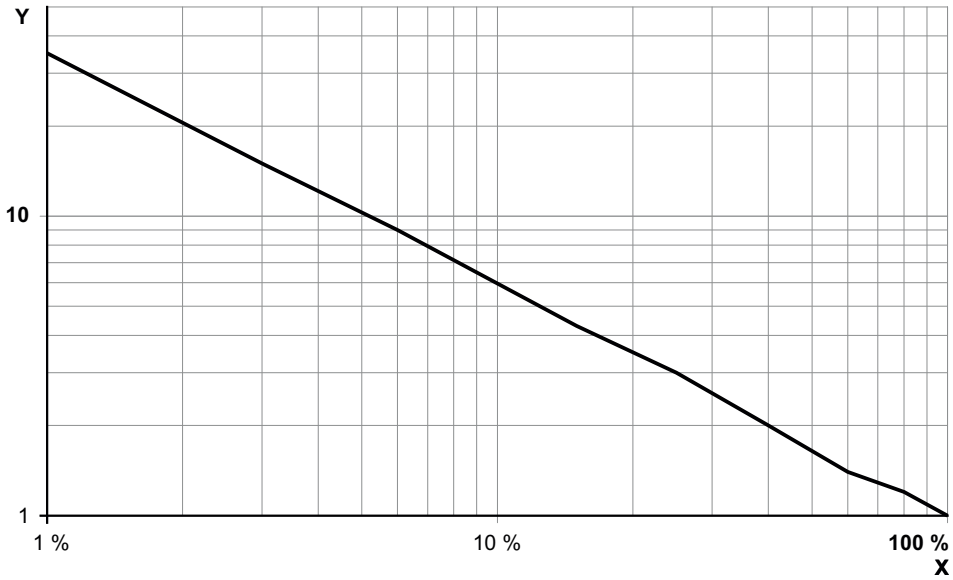

18014419041960715

X	Cyclic duration factor in %	1	3	6	15	25	40	60	80	100
Y	Overload factor k	35	15	9	4.3	3	2	1.4	1.2	1

3955948/EN – 05/2026

Wire resistors, frame resistors

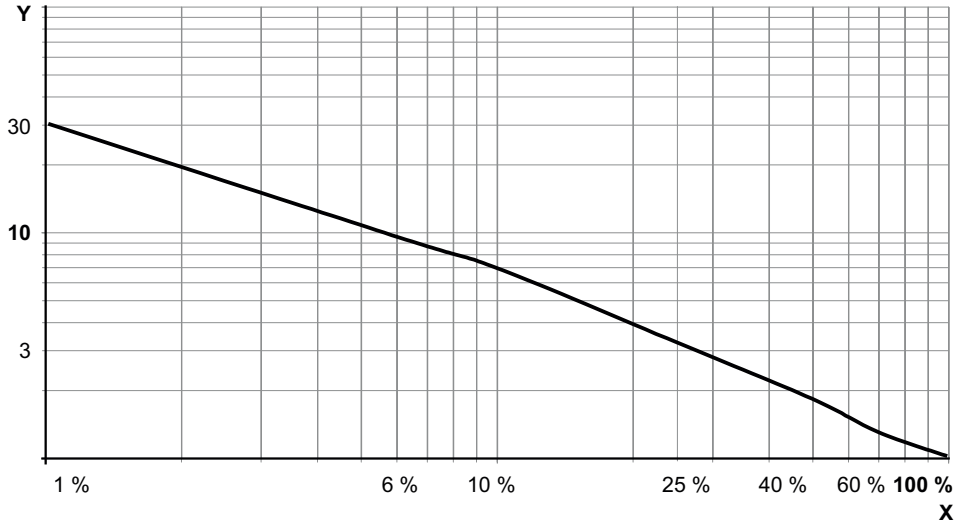

9007242996955915

X	**Cyclic duration factor in %**	1	3	6	15	25	40	60	80	100
Y	**Overload factor k**	30	15	9.5	5	3.2	2.2	1.5	1.12	1

Grid resistors

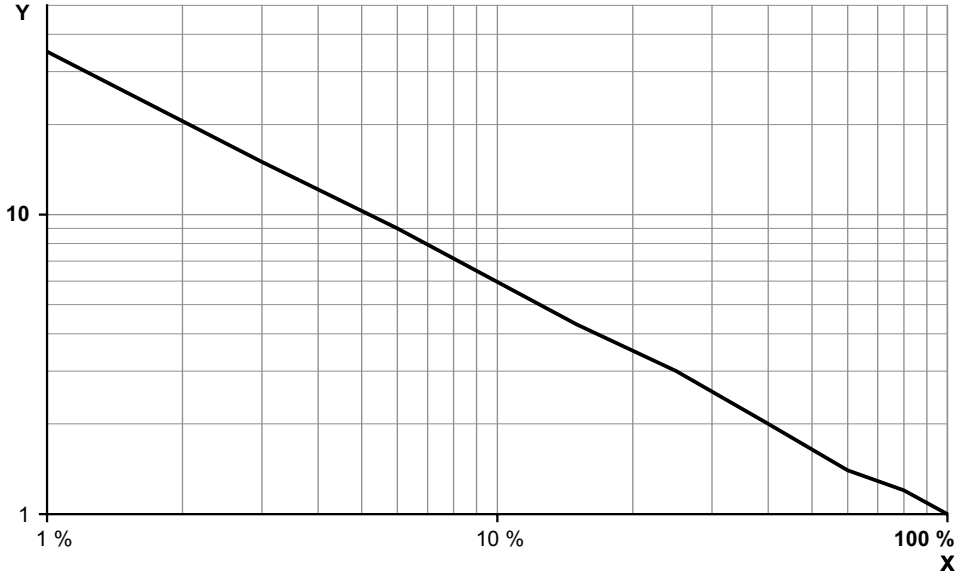

18014401500012171

X	**Cyclic duration factor in %**	1	3	6	15	25	40	60	80	100
Y	**Overload factor k**	20	12	7.6	4	3	2.2	1.5	1.12	1

33955948/EN – 05/2026

Peak braking power

The maximum peak braking power that can be achieved is specified by the resistance value and the DC link voltage. It is calculated as follows:

$$P_{max} = \frac{V_{DCL\,max}^{2}}{R \times 1.4}$$

P_{max}	Maximum peak braking power that the braking resistor can absorb
V_{DCL_max}	Maximum DC link voltage, see chapter "Technical data" (→ 🗎 44).
R	Braking resistance value

The maximum peak braking power required by the application is calculated from the regenerative parts within a cycle.

The peak braking power required by the application must be lower than the maximum peak braking power that can be achieved and absorbed by the braking resistor.

The peak braking power for each braking resistor is specified in the **product manual** > chapter "BW../BW..-T braking resistors" (→ 🗎 89).

Current-carrying capacity of the brake chopper

The resistance value of the braking resistor R_{BR} must not be lower than the minimum permitted braking resistance R_{BR_min}, see chapter "Technical data" (→ 🗎 44). This ensures that the brake chopper is not damaged.

$$R_{BR} \geq R_{BR_min}$$

The continuous braking power toward the braking resistor must not exceed the apparent output power of the inverter.

5.9.4 Supply cable for braking resistor

Observe the following information:

- Use only shielded or twisted cables.
- The cable cross section depends on the tripping current I_F.
- The maximum permitted cable length between the inverter and the braking resistor is 100 m.
- When the braking resistor is connected to its protection device, the shield of the supply cable must be routed via an additional shield terminal.
- The nominal voltage of the cable must amount to at least U0/U = 300 V/500 V.

5.9.5 Calculation example

Given: Peak braking power: 13 kW

Average braking power: 6 kW

Braking time: 7 s

Cycle duration: 28 s

Minimum permissible braking resistor value of the inverter: 47 ohm, see chapter "Technical data" (→ 🗎 44).

Required: BW.. braking resistor

33955948/EN – 05/2026

Calculation:

1) Determine the cyclic duration factor

Cyclic duration factor cdf = braking time/cycle duration

Cyclic duration factor cdf = (7 s/28 s) × 100% = 25%

When selecting the braking resistor, note the assignment of inverter and braking resistor, see chapter "Technical data and assignment to an inverter" (→ 🗎 90).

2) Determine the overload capacity

Determine the overload factor, e.g., for a wire resistor at a cyclic duration factor cdf of 25% from the respective diagram.

Overload factor k = 3.2

3) Calculate the braking power at 100% cdf

Braking power 100% cdf = average braking power/overload factor

Braking power 100% cdf = 6 kW/3.2 = 1.88 kW

The braking power of the braking resistor at 100% cdf must be ≥ 1.88 kW.

4) Select the braking resistor

Selected braking resistor: BW247-T.

Resistance value R_{BR} = 47 Ω

Peak braking power: 14.3 kW, see chapter "Technical data and assignment to an inverter" (→ 🗎 90).

Current-carrying capacity at 100% cdf: 2 kW

5.9.6 Protection against thermal overload of the braking resistor

The appropriate measures to protect a braking resistor against thermal overload can be found in chapter "BW.. braking resistors" (→ 🗎 345).

5.9.7 Connecting braking resistors in parallel

It is permitted to connect several identical braking resistors in parallel. In that case, the following applies:

- Connect the power connections of the braking resistors to +R and -R in parallel.
- Pay attention to the minimum permitted braking resistance value R_{BRmin} when connecting braking resistors in parallel.
- For BW.. braking resistors, each braking resistor requires separate protection against thermal overload, e.g. an external thermal overload relay.
- For BW..-T braking resistors (T = with integrated temperature switch), the signal contacts (NC contacts) must be connected in series.

5.10 EMC-compliant installation according to EN 61800-3

The inverters are designed for use as components for installation in machinery and systems. They comply with the EMC product standard EN 61800-3 "Adjustable-speed electrical drives".

33955948/EN – 05/2026

Provided the EMC-compliant installation is observed, the appropriate requirements for a CE marking are met on the basis of the EMC Directive 2014/30/EU.

The device is not intended for use in residential environments. In residential environments, the device can cause high-frequency interference that may interfere with the radio reception and require interference suppression measures.

5.10.1 Interference emission

The cable length must be as short as possible for EMC-compliant installation. SEW-EURODRIVE recommends using low-capacity cables. To comply with limit class C2 according to EN 61800-3, the measures listed below must be taken.

Limit value class C2

Inverter	Measures		
	On the line side	On the motor side	
	NF.. line filter	HF.. output filter HD.. output choke	Shielded cables
Size 0S[1], 0L[1], 3	–	–	✓
	–	HD.. or HF..	–
Size 4 – 6	✓	–	✓
	✓	HD.. or HF..	–
Size 7	✓	–	✓
	✓	HD..	–
Size 8[2]	✓	–	✓
	✓	HD..	–

1) When using unshielded motor cables in conjunction with the HD.. or HF.. output options, observe the following for sizes 0S 1-phase and 0L: Limit value class C2 is adhered to with regard to the line-connected faults. Additional measures may be required to achieve limit value class C2 in the event of radiating interference, see the "Drive Engineering – Practical Implementation" manual (part number 11535806). C3 is observed for size 0 with regard to both cable-bound and radiating interference.

2) Note that limit value class C2 is observed with regard to the line-connected errors. Additional measures may be required to achieve limit value class C2 in the event of radiating interference, see the "Drive Engineering – Practical Implementation" manual.

INFORMATION

When using an output filter, activate the "Output filter" selection during startup.

INFORMATION

The EMC limit values for interference emission are not specified for voltage supply systems without grounded star point (IT systems). The efficiency of filters is severely limited.

33955948/EN – 05/2026

5.11 Supply system cables and motor cables

5.11.1 Supply system cable

The supply system cable is generally dimensioned system-specifically and depends on the design of the line connection. The structure of a line connection is described in chapter "Power connection" (→ 🗎 369). Observe the country-specific and system-specific regulations when selecting the cross section of the supply system cable.

Recommended cross section

The cross section of the supply system cables must be dimensioned based on the nominal line current I_{line}.

SEW-EURODRIVE suggests the following cable cross sections. These cable cross sections apply under the following conditions:

- The conductors are made of copper with PVC insulation, operating temperature 70 °C.
- The cables are routed according to IEC 60204-1 installation type C at an ambient temperature of 40 °C, accumulation 1.

MCX91A-….-5.3..	Unit	Size								
		0S							0L	
		0010	0016	0020	0025	0032	0040	0055	0070	0095
Nominal output current I_N	A	1	1.6	2	2.5	3.2	4	5.5	7	9.5
Nominal line current AC I_{line}	A	0.9	1.4	1.8	2.3	2.9	3.6	5	6.3	8.6
Supply system cable L1/L2/L3	mm^2	1.5								
Fuse power circuit breaker/motor circuit breaker	A	10								

MCX91A-….-5.3..	Unit	Size							
		0L		3	4		5		
		0125	0160	0240	0320	0460	0620	0750	0910
Nominal output current I_N	A	12.5	16	24	32	46	62	75	91
Nominal line current AC I_{line}	A	11.3	14.4	21.6	28.8	41.4	55.8	67.5	81.9
Supply system cable L1/L2/L3	mm^2	2.5		4	6	10	16	25	35
Fuse power circuit breaker/motor circuit breaker	A	16		25	32	50	63	80	100

MCX91A-….-5.3..	Unit	Size								
		6			7			8		
		1130	1490	1770	2200	2500	3000	3800	4700	5880
Nominal output current I_N	A	113	149	177	220	250	300	380	470	588
Nominal line current AC I_{line}	A	102	134	159	198	225	270	342	423	529
Supply system cable L1/L2/L3	mm^2	50	70	120	150		240	[1]		
Fuse power circuit breaker/motor circuit breaker	A	125	160	200	250		315	400	500	630

1) The supply system cable must be configured according to project-specific requirements. Generally, the supply system cable is made up of single conductors routed in parallel.

MCX9.A-….-2.3..	Unit	Size						
		0S					0L	
		0017	0025	0034	0042	0055	0070	0093
Nominal output current I_N	A	1.7	2.5	3.4	4.2	5.5	7	9.3
Nominal line current AC I_{line}	A	1.5	2.3	3.1	3.8	5	6.3	8.4
Supply system cable L1/L2/L3	mm^2	1.5						
Fuse power circuit breaker/motor circuit breaker	A	10						

MCX9.A-….-2.3..	Unit	Size						
		0L	3	4		5		6
		0140	0213	0290	0420	0570	0840	1080
Nominal output current I_N	A	14	21.3	29	42	57	84	108
Nominal line current AC I_{line}	A	12.6	19.2	26.1	37.8	51.3	75.6	97.2
Supply system cable L1/L2/L3	mm^2	2.5	4	6	10	16	35	50
Fuse power circuit breaker/motor circuit breaker	A	16	25	32	50	63	100	125

MCX9.A-….-2.1..	Unit	Size							
		0S				0L			
		0017	0025	0034	0042	0055	0070	0093	0110
Nominal output current I_N	A	1.7	2.5	3.4	4.2	5.5	7	9.3	11
Nominal line current AC I_{line}	A	5.1	7	8.8	10.9	14.8	16	21.4	24.9
Supply system cable L1/L2/L3	mm^2	1.5					2.5	4	
Fuse power circuit breaker/motor circuit breaker	A	10			16		20	25	

INFORMATION

Recommended cross section

The values are only recommendations. They are no substitute for detailed project planning of the cables depending on the concrete application and considering the applicable regulations.

INFORMATION

Securing the supply system cable

- Secure the supply system cable with appropriate safety elements.
- When selecting the supply system cable, make sure that the selected cross section is in the range of the connectable cross section of the terminals.
- When selecting the line fuse, observe chapter "Line fuses and miniature circuit breakers" (→ 🖹 178).

INFORMATION

Use of a residual current device

If using a residual current device is not mandatory according to the standards, SEW-EURODRIVE recommends not using a residual current device. Leakage currents caused by cable capacitances can lead to false tripping.

5.11.2 Motor cable

Cable length

A maximum motor cable length must not be exceeded when connecting a motor.

The following configuration guidelines must be observed:

- When shielded motor cables are used, a capacitance conductor/shield of maximum 280 pF/m must not be exceeded.
- For line voltages > 400 V and/or ambient temperatures > 40 °C, the maximum permitted cable length is reduced, see chapter "Derating of the cable length due to line voltage, ambient temperature, and PWM frequency" (→ 🖹 165).

3955948/EN – 05/2026

MCX91A-....-5.3..	Size						
	0S	0S – 0L	3	4 – 6	7		8
	0010 – 0025	0032 – 0160	0240	0320 – 1770	2200 – 2500	3000	3800 – 5880
	Maximum motor cable length in m for shielded cable						
PWM frequency							
2.5 kHz	–	–	–	–	–	400	400
4 kHz	50/100[1)]	100	400	400	400	300	300
8 kHz	25	70	300	300	300	200	–
16 kHz	12.5	40	200	200	–	–	–

1) A cable length of 100 m is permissible under the following conditions: Line voltage: ≤ 400 V; clock frequency: 4 kHz; ambient temperature: ≤ 35 °C; no further derating permissible.

MCX91A-....-5.3..	Size						
	0S	0S – 0L	3	4 – 6	7		8
	0010 – 0025	0032 – 0160	0240	0320 – 1770	2200 – 2500	3000	3800 – 5880
	Maximum motor cable length in m for unshielded cable						
PWM frequency							
2.5 kHz	–	–	–	–	–	1200	1200
4 kHz	100	200	1200	1200	1200	900	900
8 kHz	50	140	900	900	900	600	–
16 kHz	25	80	600	600	–	–	–

MCX91A-....-2.3..	Size				
	0S	0S – 0L	3	4	5 – 6
	0017 – 0025	0032 – 0140	0213-1080	0290 – 0420	0570 – 1080
	Maximum motor cable length in m for shielded cables				
PWM frequency					
4 kHz	50/100[1)]	100	250	300	400
8 kHz	25	70	150	250	300
16 kHz	12.5	40	100	150	200

1) A cable length of 100 m is permissible under the following conditions: Line voltage: ≤ 400 V; clock frequency: 4 kHz; ambient temperature: ≤ 35 °C; no further derating permissible.

MCX91A.-....-2.3..	Size				
	0S	0S – 0L	3	4	5 – 6
	0017 – 0025	0032 – 0140	0213 – 1080	0290 – 0420	0570 – 1080
	Maximum motor cable length in m for unshielded cables				
PWM frequency					
4 kHz	100	200	750	900	1200
8 kHz	50	140	450	750	900
16 kHz	25	80	300	450	600

MCX91A-....-2.1..	Size	
	0S	0S – 0L
	0017 – 0025	0034 – 0110
	Maximum motor cable length in m for shielded cables	
PWM frequency		
4 kHz	50	100
8 kHz	25	70
16 kHz	12.5	40

MCX91A-....-2.1..	Size	
	0S	0S – 0L
	0017 – 0025	0034 – 0110
	Maximum motor cable length in m for unshielded cable	
PWM frequency		
4 kHz	100	200
8 kHz	50	140
16 kHz	25	80

MCX91A-....-5.3..	Size						
	0S	0S – 0L	3	4 to 6	7		8
	0010 – 0025	0032 – 0160	0240	0320 – 1770	2200 – 2500	3000	3800 – 5880
	Maximum motor cable length in m for shielded cable						
PWM frequency 2.5 kHz 4 kHz 8 kHz 16 kHz	 – 50/100[1)] 25 12.5	 – 100 70 40	 – 400 300 200	 – 400 300 200	 – 400 300 –	 400 300 200 –	 400 300 – –
PWM frequency 2.5 kHz 4 kHz 8 kHz 16 kHz	 – 100 50 25	 – 200 140 80	 – 1200 900 600	 – 1200 900 600	 – 1200 900 –	 1200 900 600 –	 1200 900 – –

1) A cable length of 100 m is permissible under the following conditions: Line voltage: ≤ 400 V; clock frequency: 4 kHz; ambient temperature: ≤ 35 °C; no further derating permissible.

Voltage drop

Select the cable cross section of the motor cable in a way that a maximum of 5% voltage drop occurs at nominal current of the motor. Observe the information in the corresponding motor catalogs. If the voltage drop is too large, the motor will not reach its full torque.

5.12 Line components

5.12.1 Line fuses and miniature circuit breakers

Line fuses and miniature circuit breakers are used for protecting the supply system cables. A motor circuit breaker can be used as an alternative. For fusing, use fuses, miniature circuit breakers, or motor circuit breakers with the following properties:

Type class	Prerequisite
Fuses in utilization categories gL, gG	Nominal voltage ≥ nominal line voltage
Miniature circuit breaker with characteristics B, C, D	Nominal voltage ≥ nominal line voltage
Motor circuit breaker	Nominal voltage ≥ nominal line voltage

Select the rated current of the fuse according to the table in chapter "Recommended cross section for nominal operation" (→ 🗎 175).

If project planning is available, smaller rated currents may be selected for fusing:

- The effective current requirement for the application is determined in the SEW-Workbench. Select the rated current of the fusing at least 10% higher than the specification "Line supply: Calculated effective current".
- If a motor has already been assigned but no SEW-Workbench calculation is available, select the rated current of the fusing at least 10% higher than the nominal motor current.

For fusing, observe the country-specific and system-specific regulations and, if necessary, the notes in chapter "UL-compliant installation".

33955948/EN – 05/2026

5.12.2 Line contactor

A line contactor is used to separate the inverter from the supply system in the event of a fault and to switch the power supply on and off.

For more information, refer to chapter "Using the line contactor" (→ 🗎 330).

5.12.3 NF.. line filters

A line filter reduces interference emission via the supply system cable, which is generated by the inverter. The line filter mainly serves to meet interference voltage limit requirements in the frequency range from 150 kHz to 30 MHz at the line connection. In addition, a line filter dampens the interference from the grid affecting the inverter. The choice of line filter depends on the nominal line current and the line voltage of the inverter.

5.12.4 ND.. line choke

An ND.. line choke can be used as an option:

- To support overvoltage protection
- To smoothen the line current, to reduce harmonics
- For protection in the event of distorted line voltage
- Limiting the charging current when several inverters are connected together in parallel on the input end with a shared line contactor (nominal current of line choke = total of inverter currents)

Connect a line choke for limiting the inrush current:

- With 5 or more 3-phase devices
- With 2 or more 1-phase devices
- for each inverter MCX91A-0110-2E1-4..

5.12.5 Selecting the residual current device

The inverter can cause a direct current in the PE conductor.

Proceed as follows to select the residual current device:

1. If using a residual current device is not mandatory according to the standards, SEW-EURODRIVE recommends not using a residual current device.
2. ⚠ **WARNING!** No protection against electric shock if an incorrect type of residual current device is used. Severe or fatal injuries.
   If a residual current device (residual current device RCD or residual current monitor RCM) is provided, use an all-current-sensitive RCD or RCM of type B.
3. If a residual current device is required, select the residual current device according to the requirements for protecting persons, fire protection or system protection. Observe the tripping characteristic, the deceleration and the rated tripping current of the residual current device during selection.
4. During project planning, note that leakage currents which are as low as possible occur in the system for operational reasons.
5. If the operational leakage currents in a system are too high for a single residual current device, you can split the current supply to several circuits with their own residual current devices.

33955948/EN – 05/2026

5.13 Components on the output side

5.13.1 HD.. output chokes

SEW-EURODRIVE recommends using output chokes to suppress interference emission when using unshielded motor cables. Observe chapter "Technical data" > "HD.. output choke" (→ 🗎 115) when designing the output choke.

5.13.2 HF.. output filters

The HF.. output filter is a sine filter used to smooth the output voltages of inverters:

- Discharge currents in the motor cables are suppressed.
- Motor winding insulations of third-party motors that are not suitable for inverters are protected.
- For long motor cables (> 100 m), overvoltage peaks are prevented.

Use

Observe the following information:

- When operating asynchronous motors, output filters may only be used in the inverter operating modes V/f and VFC^{PLUS}.
- Calling up the FCB 25 is not permitted when the output filter is connected. Otherwise, the FCB 25 provides incorrect results because of the output filter inductance.
- Output filters may be used up to a maximum inverter output frequency of 250 Hz.
- Maintain a ventilation clearance of at least 100 mm below and above the output filter. There is no need for a clearance on the side.
- Limit the length of the cable between the inverter and the output filter to the required length. Maximum permitted length:
  - 1 m with unshielded cable
  - 10 m with shielded cable
- An unshielded motor supply cable is sufficient when using an output filter.

Selection

The selection of HF.. output filters is based on the nominal motor current. For group or multi-motor drives, use the sum of the nominal motor currents. The nominal current of the output filter must be at least the nominal motor current and must not exceed 200% of the nominal motor current.

Operating modes

Output filters can be operated with or without DC link connection. Recommended operation with DC link connection improves the filter effect between the phases and PE. When operating with DC link connection, the device utilization of the inverter increases.

Note the following restrictions:

- Operation with DC link connection
  - Nominal filter current ≥ 65 A: Set the minimum clock frequency = 8 kHz.
  - Nominal filter current < 65 A: The minimum clock frequency can be set as required.
- Operation without DC link connection

33955948/EN – 05/2026

– The maximum clock frequency is 8 kHz.
– The maximum shielded motor cable length is 200 m.

Voltage drop

The voltage drop at the HF.. output filter is proportional to the modulated basic output frequency and the motor current. Calculate the voltage drop for output filters from SEW-EURODRIVE according to the following formula:

$$\Delta V_{Outp.Filter} = I \times \sqrt{3} \times \sqrt{(2 \times \pi \times f \times L)^2 + R^2}$$

Since the resistance R is negligible compared to the inductance L, the following simplification applies:

$$\Delta V_{Outp.Filter} = I \times \sqrt{3} \times 2 \times \pi \times f \times L$$

I	Output current
L	Inductance of the output filter
f	Output frequency of the inverter
R	Output filter resistance
$^{\triangle}V_{output\ filter}$	Voltage drop at the output filter

Check whether the motor can reach the required torque at the given voltage drop V_{drop}.

Derating

The following table shows the derating of the HF.. output filter depending on line voltage and output frequency.

Consider an additional derating of 3% I_N/K above an ambient temperature of 45 °C.

Output frequency	Permissible filter current I/I_N	
	Nominal filter current ≤ 46 A	Nominal filter current ≥ 65 A
0 – 10 Hz		
- without UZ connection at 400 V	100%	100%
- with UZ connection at 400 V	100%	100%
- without UZ connection at 500 V	100%	100%
- with UZ connection at 500 V	70% + 1.5% × output frequency	10% + 9% × output frequency
11 – 20 Hz		
- without UZ connection at 400 V	100%	100%
- with UZ connection at 400 V	100%	100%
- without UZ connection at 500 V	100%	100%
- with UZ connection at 500 V	70% + 1.5% × output frequency	100%
21 – 149 Hz		
- with and without UZ connection	100%	100%
150 – 250 Hz		
- with and without UZ connection	100% - 0.1% × (output frequency - 150 Hz)	100% - 0.2% × (output frequency - 150 Hz)

Short-time operation without speed derating, e.g., startup

- Filter current 100% for 5 min every 60 min permitted

5.14 24 V supply voltage selection

5.14.1 Description

The MCX91A.. inverters have an internal 24 V voltage supply that can also be supported externally.

For size 3 – 8 inverters, the 24 V switched-mode power supply has a power of 80 W. For size 0S and 0L inverters, the internal 24 V switched-mode power supply has a power of 15 W.

Observe the following information for devices of sizes 0S and 0L:

- Devices without safety option do not require an external backup voltage. In this case, a total of 300 mA is available at the outputs. The maximum load of the MOVILINK® DDI connection is 150 mA. The actual current consumption of the MOVILINK® DDI connection must be subtracted from the 300 mA.
- Devices with safety option (CSB, CSL, CSS) must always have an external backup voltage. This backup voltage must not be interrupted; otherwise, the safety options are not supplied.
- The following applies to both cases:

  If the device is supported by an external supply, the entire supply is provided by the external power supply unit. In this case, the MOVILINK® DDI connection can be loaded with a maximum of 500 mA. For all other device outputs, the limitation of the technical data applies.

If a 24 V backup voltage is necessary, it must be switched on before the line voltage and switched off after the line voltage.

5.14.2 Project planning for 24 V supply power

The power consumption of all components is required for dimensioning the 24 V supply voltage. The 24 V voltage supply must provide the sum of all powers.

INFORMATION

The power peaks during switch-on (caused by internal capacitances present in the devices) must not be taken into consideration as those capacitances are very small. Commercially available switched-mode power supplies can reliably switch on the maximum occurring capacities.

33955948/EN – 05/2026

5.14.3 Power consumption of the 24 V supply

Inverter

The following table shows the power consumption of the 24 V supply depending on the used modules and the installed options:

MCX91A..	Unit	Power consumption without I/O, motor encoder, motor brake		
		PROFINET		
		-T0./../CSO/CFN	-T0./../DI/CSO/CFN	-T0./../DI/CSL/CFN -T0./../DI/CSS/CFN
		Ethernet/IP™, Modbus TCP		
		-T0./../CSO/CFE	-T0./../DI/CSO/CFE	-T0./../DI/CSL/CFE -T0./../DI/CSS/CFE
		POWERLINK		
		-L00/../CSO/CFL	-L00/../DI/CSO/CFL	-L00/../DI/CSL/CFL -L00/../DI/CSS/CFL
Sizes 0S and 0L	W	6	6.5	8.5
Sizes 3, 6, 7		20	20.5	22.5
Size 4		30	30.5	32.5
Size 5		15	15.5	17.5
Size 8		25	25.5	27.5

Motors with MOVILINK® DDI

The following table shows the power consumption of the 24 V supply via MOVILINK® DDI:

MOVILINK® DDI	Unit	Power consumption
EZ2Z, AZ2Z, EZ4Z, AZ4Z	W	1.5
EI8Z		2.6
EK8Z, AK8Z		2.6
BG1Z, BS1Z[1)]		0.9
Motor with MOVILINK® DDI without encoder and without integrated brake control for MOVILINK® DDI		1.5

1) The power consumption of the 24 V brake must be considered separately.

5.14.4 Project planning example

The following project planning example shows the project planning of the 24 V voltage supply:

- The inverter supplies the DI01 digital input with voltage.
- Power demand of the digital input: 24 mA × 24 V = 0.6 W
- The motor brake is controlled via MOVILINK® DDI.

33955948/EN – 05/2026

- Power demand of the motor encoder (EI8Z) and the integrated brake rectifier: 2.6 W + 0.9 W = 3.5 W
- A digital output is loaded with DC 50 mA.
- Power demand of the digital output: 1.2 W
- Power demand of the basic unit (**size 0S, -T0./../DI/CSO/CFN**): 6.5 W
- Total power demand: 11.8 W

An external 24 V voltage supply is not required.

5.15 Energy-saving functions

5.15.1 Flux optimization

Flux optimization is a function that allows operation of an asynchronous motor in VFC^{PLUS} control mode with minimal losses. Depending on the torque setpoint, the magnetic flux is managed in such a way that the motor is operated with minimum current. In partial load operation, as well as in case of overload, the total losses of the motor can be significantly reduced. This function has no influence in the range of the nominal torque or a bit below, as the motor is usually operated at almost optimum conditions.

For system-related reasons, the torque control times are longer with flux optimization than without flux optimization, due to necessary changes in flux. The flux optimization is especially suitable for applications with little dynamics, such as fans, pumps, escalators, and conveyor systems with constant speed.

Flux optimization can reduce magnetization losses in the motor.

5.15.2 Standby mode

Description

Standby mode is intended for times in which operation is paused. The significant difference between disconnection of the DC 24 V supply voltage and standby mode is that switching from standby mode to operation only takes approx. 500 ms, and that bus communication is maintained. This allows for reducing the energy consumption even in short pauses.

The following functions are deactivated in standby mode:

- 7-segment display
- Digital outputs
- Analog outputs
- Power section control
- Fan in power section
- Encoder supply and encoder evaluation (optional)

The STO function is activated when a safety option CS..A is used. For the state of the STO function, the external wiring is relevant without safety option.

Standby operation can be activated via a digital input or via a control word bit. The bus communication is active without restrictions in standby operation.

33955948/EN – 05/2026

Energy consumption in standby mode

The "Standby mode" energy-saving function reduces the DC 24 V power consumption. For further information, refer to chapter "Power consumption of the 24 V supply" (→ 🗎 183).

5.16 UL-compliant installation

INFORMATION

Due to UL requirements, the following chapter is always printed in English and in some cases in French, regardless of the language of this documentation.

INFORMATION

The UL label must be attached to the device or in close proximity to the device.

Observe the following notes for UL-compliant installation:

Use only tested units with a limited output voltage (V_{max} = DC 30 V) and limited output current (I_{max} = 8 A) as an external DC 24 V voltage source.

5.16.1 Field wiring power terminals

- Use 75 °C copper conductors only.
- Tightening torque and wire size for field wiring terminals:

Connection		Tightening torque in-lbs							
		Frame size							
		0S	0L	3	4	5	6	7	8
Line connection	X1	4.4 – 5.3			15.0 – 15.9	75.2 – 84.1	88.5 – 132.8	123.9 – 177.0	
Motor and braking resistor terminal	X2								
PE connection	–	10.6 – 13.3			26.6 – 35.4	53.1 – 88.5			
Terminal screw for TN/IT systems	EMC	10.6 – 15		8.9 – 10.6					
Other M4 screw connections	M4	12.4 – 14.2							

Wire Sizes – The wiring sizes of motor output should not exceed the following:

Model (Frame size)	Max. wire size motor terminal (AWG)	Max. wire size motor terminal (kcmil)
Size 3	8	–
Size 4	8	–
Size 5	3/0	–
Size 6	3/0	–
Size 7	–	500 or 2 × 300

33955948/EN – 05/2026

Model (Frame size)	Max. wire size motor terminal (AWG)	Max. wire size motor terminal (kcmil)
Size 8	–	500 or 2 × 300

5.16.2 Short circuit current rating

Suitable for use on a circuit capable of delivering not more than 65 000 rms symmetrical amperes when protected by fuses, inverse time circuit breakers or type E combination motor controllers as described in the tables below.

Max. voltage is limited to 240 V (230 V units only) or 500 V (400 V units only).

5.16.3 Branch circuit protection

Integral solid state short circuit protection does not provide branch circuit protection. Branch circuit protection must be provided in accordance with the National Electrical Code and any additional local codes (US) or Canadian Electrical Code, Part 1 (CA).

WARNING - The opening of the branch-circuit protective device may be an indication that a fault current has been interrupted. To reduce the risk of fire or electric shock, current-carrying parts and other components of the controller should be examined and replaced if damaged. If burnout of the current element of an overload relay occurs, the complete overload relay must be replaced.

ATTENTION - LE DÉCLENCHEMENT DU DISPOSITIF DE PROTECTION DU CIRCUIT DE DÉRIVATION PEUT ÊTRE DÛ À UNE COUPURE QUI RÉSULTE D'UN COURANT DE DÉFAUT. POUR LIMITER LE RISQUE D'INCENDIE OU DE CHOC ÉLECTRIQUE, EXAMINER LES PIÈCES PORTEUSES DE COURANT ET LES AUTRES ÉLÉMENTS DU CONTRÔLEUR ET LES REMPLACER S'ILS SONT ENDOMMAGÉS. EN CAS DE GRILLAGE DE L'ÉLÉMENT TRAVERSÉ PAR LE COURANT DANS UN RELAIS DE SURCHARGE, LE RELAIS TOUT ENTIER DOIT ÊTRE REMPLACÉ.

For maximum branch circuit protection see tables below.

Single-phase 200 – 240 V voltage range (SCCR: 65 kA)			
Model (frame size)	**Non-semiconductor fuses (currents are maximum, voltages minimum values)**	**Inverse-time circuit breaker (currents are maximum, voltages minimum values)**	**Type E combination motor controller, mfd by Siemens, type Sirius (rated 480 V/277 V)**
MCX91A-0017-2.3-4.. (0S)	20 A/240 V	20 A/240 V	3RV2011-1GA10, 6.3 A
MCX91A-0025-2.3-4.. (0S)	25 A/240 V	25 A/240 V	3RV2011-1HA10, 8 A
MCX91A-0034-2.3-4.. (0S)	30 A/240 V	30 A/240 V	3RV2011-1JA10, 10 A
MCX91A-0042-2.3-4.. (0S)	40 A/240 V	30 A/240 V	3RV2011-4AA10, 16 A
MCX91A-0055-2.3-4.. (0L)	40 A/240 V	30 A/240 V	3RV2011-4AA10, 16 A
MCX91A-0070-2.3-4.. (0L)	60 A/240 V	30 A/240 V	3RV2011-4BA10, 20 A
MCX91A-0093-2.3-4.. (0L)	60 A/240 V	30 A/240 V	3RV2011-4DA10, 25 A
MCX91A-0110-2.3-4.. (0L)	60 A/240 V	30 A/240 V	3RV2011-4EA10, 32 A

33955948/EN – 05/2026

Three-phase 200 – 240 V voltage range (SCCR: 65 kA)			
Model (frame size)	**Non-semiconductor fuses (currents are maximum, voltages minimum values)**	**Inverse-time circuit breaker (currents are maximum, voltages minimum values)**	**Type E combination motor controller, mfd by Siemens, type Sirius (rated 480 V/277 V)**
MCX91A-0017-2.3-4.. (0S)	6 A/240 V	15 A/240 V	3RV2011-1AA10, 1.6 A
MCX91A-0025-2.3-4.. (0S)	6 A/240 V	15 A/240 V	3RV2011-1CA10, 2.5 A
MCX91A-0034-2.3-4.. (0S)	10 A/240 V	15 A/240 V	3RV2011-1EA10, 4 A
MCX91A-0042-2.3-4.. (0S)	15 A/240 V	15 A/240 V	3RV2011-1EA10, 4 A
MCX91A-0055-2.3-4.. (0S)	20 A/240 V	20 A/240 V	3RV2011-1GA10, 6.3 A
MCX91A-0070-2.3-4.. (0L)	25 A/240 V	25 A/240 V	3RV2011-1HA10, 8 A
MCX91A-0093-2.3-4.. (0L)	30 A/240 V	30 A/240 V	3RV2011-1JA10, 10 A
MCX91A-0140-2.3-4.. (0L)	30 A/240 V	30 A/240 V	3RV2011-4AA10, 16 A
MCX9.A-0213-2.3-4.. (3)	60 A/240 V Class: CA, CB, CD, CF, G, J, K-1, K-5, RK1, RK5, T	60 A/240 V	3RV2021-4DA10, 25 A
MCX91A-0290-2.3-4.. (4)	60 A/240 V Class: CA, CB, CD, CF, G, J, K-1, K-5, RK1, RK5, T	60 A/240 V	3RV2031-4EA10, 32 A
MCX91A-0420-2.3-4.. (4)	125 A/240 V Class: J, K-1, RK1, T	125 A/240 V	3RV2031-4VA10, 45 A
MCX91A-0570-2.3-4.. (5)	125 A/240 V Class: J, K-1, RK1, T	125 A/240 V	3RV2041-4JA10, 63 A
MCX91A-0840-2.3-4.. (5)	225 A/240 V Class: J, T	225 A/240 V	3RV2041-4YA10, 93 A
MCX91A-1080-2.3-4.. (6)	225 A/240 V Class: J, T	225 A/240 V	3RV2041-4YA10, 93 A

Voltage rating of BCP is permitted to be higher.

Three-phase 380 – 500 V voltage range (SCCR: 65 kA)			
Model (frame size)	**Non-semiconductor fuses (currents are maximum, voltages minimum values)**	**Inverse-time circuit breaker (currents are maximum, voltages minimum values)**	**Type E combination motor controller, mfd by Siemens, type Sirius (rated 480 V/277 V)**
MCX91A-0010-5.3-4.. (0S)	3 A/500 V	15 A/500 V	3RV2011-0JA10, 1 A
MCX91A-0016-5.3-4.. (0S)	3 A/500 V	15 A/500 V	3RV2011-1AA10, 1.6 A
MCX91A-0020-5.3-4.. (0S)	6 A/500 V	15 A/500 V	3RV2011-1CA10, 2.5 A
MCX91A-0025-5.3-4.. (0S)	6 A/500 V	15 A/500 V	3RV2011-1CA10, 2.5 A
MCX91A-0032-5.3-4.. (0S)	10 A/500 V	15 A/500 V	3RV2011-1EA10, 4 A
MCX91A-0040-5.3-4.. (0S)	10 A/500 V	15 A/500 V	3RV2011-1EA10, 4 A
MCX91A-0055-5.3-4.. (0S)	20 A/500 V	20 A/500 V	3RV2011-1GA10, 6.3 A
MCX91A-0070-5.3-4.. (0L)	25 A/500 V	25 A/500 V	3RV2011-1HA10, 8 A

33955948/EN – 05/2026

Three-phase 380 – 500 V voltage range (SCCR: 65 kA)			
Model (frame size)	**Non-semiconductor fuses (currents are maximum, voltages minimum values)**	**Inverse-time circuit breaker (currents are maximum, voltages minimum values)**	**Type E combination motor controller, mfd by Siemens, type Sirius (rated 480 V/277 V)**
MCX91A-0095-5.3-4.. (0L)	30 A/500 V	30 A/500 V	3RV2011-1JA10, 10 A
MCX91A-0125-5.3-4.. (0L)	30 A/500 V	30 A/500 V	3RV2011-4AA10, 16 A
MCX91A-0160-5.3-4.. (0L)	30 A/500 V	30 A/500 V	3RV2021-4BA10, 20 A
MCX91A-0240-5.3-4.. (3)	60 A/500 V Class: CA, CB, CD, CF, G, J, K-1, K-5, RK1, RK5, T	60 A/500 V	3RV2021-4DA10, 25 A
MCX91A-0320-5.3-4.. (4)	60 A/500 V Class: CA, CB, CD, CF, G, J, K-1, K-5, RK1, RK5, T	60 A/500 V	3RV2031-4EA10, 32 A
MCX91A-0460-5.3-4.. (4)	125 A/500 V Class: J, K-1, RK1, T	125 A/500 V	3RV2031-4VA10, 45 A
MCX91A-0620-5.3-4.. (5)	125 A/500 V Class: J, K-1, RK1, T	125 A/500 V	3RV2041-4JA10, 63 A
MCX91A-0750-5.3-4.. (5)	125 A/500 V Class: J, K-1, RK1, T	125 A/500 V	3RV2041-4KA10, 75 A
MCX91A-0910-5.3-4.. (5)	225 A/500 V Class: J, T	225 A/500 V	3RV2041-4YA10, 93 A
MCX91A-1130-5.3-4.. (6)	225 A/500 V Class: J, T	225 A/500 V	–
MCX91A-1490-5.3-4.. (6)	225 A/500 V Class: J, T	225 A/500 V	–
MCX91A-1770-5.3-4.. (6)	225 A/500 V Class: J, T	225 A/500 V	–
MCX91A-2200-5.3-4.. (7)	600 A/500 V Class: J, K-1, L, RK1, T	600 A/500 V	–
MCX91A-2500-5.3-4.. (7)	600 A/500 V Class: J, K-1, L, RK1, T	600 A/500 V	–
MCX91A-3000-5.3-4.. (7)	600 A/500 V Class: J, K-1, L, RK1, T	600 A/500 V	–
MCX91A-3800-5.3-4.. (8)	800 A/500 V Class: T	800 A/500 V	–
MCX91A-4700-5.3-4.. (8)	800 A/500 V Class: T	800 A/500 V	–
MCX91A-5880-5.3-4.. (8)	800 A/500 V Class: T	800 A/500 V	–

Voltage rating of BCP is permitted to be higher.

33955948/EN – 05/2026

5.16.4 Motor overload protection

The devices are provided with load and speed-sensitive overload protection and thermal memory retention upon shutdown or power loss.

The trip current is adjusted to 150 % of the rated motor current.

5.16.5 Surrounding air temperature rating

For surrounding air temperature rating, refer to chapter "General technical data".

5.16.6 Derating

For derating, refer to chapter "Selecting an inverter" of the product manual.

5.16.7 Other ratings

Type rating	Open type
Pollution degree	2
Max. altitude	2000 m

5.16.8 Wiring diagrams

For wiring diagrams, refer to chapter "Electrical Installation".

33955948/EN – 05/2026

6 Project planning for functional safety

6.1 Definitions

- The designation "F-DI" stands for a safe digital input.
- The designation "F-DO" stands for a safe digital output.
- The designation "DB00" stands for the digital output brake output of the inverter.
- The designation "CS..A" is used as a generic term for all derivatives of the MOVISAFE® CSB, CSL and CSS options. If a particular derivative is referred to in the documentation, then the complete designation is used.
- The term "safe" used in this manual refers to the classification as a safe function according to EN ISO 13849-1.
- PROFIsafe, Safety over EtherCAT® and CIP Safety™ are technology standards for a safe fieldbus system (safety protocol). If a particular safety protocol is referred to in the documentation, then the complete designation is used.
- MOVISUITE® is the startup/engineering software of the MOVI-C® modular automation system.
- The "Assist CS.." parameterization tool is the parameterization interface in MOVISUITE® for the MOVISAFE® CS..A safety option.
- Parameter names are shown in *italics*.
- The SS1 safety subfunction is described according to the currently applicable EN 61800-5-2 as follows:
  - SS1-t corresponds to the former presentation of SS1(c)
  - SS1-r corresponds to the former presentation of SS1(b)
- The SS2 safety subfunction is described according to the currently applicable EN 61800-5-2 as follows:
  - SS2-t corresponds to the former presentation of SS2(c)
  - SS2-r corresponds to the former presentation of SS2(b)

6.2 Underlying standards

The safety assessment of the device is based on the following standards and safety classes:

Underlying standards	
Safety class/ underlying standards	• Performance Level (PL) according to EN ISO 13849-1 • Safety Integrity Level (SIL) according to EN 61800-5-2, EN 61508 and EN 62061

Note the versions of the relevant standards on the declaration of conformity or on the TÜV certificate.

6.3 Integrated safety technology

6.3.1 Type designation

The type designation of MOVISAFE® CS..A contains the following data:

CS..A	MOVISAFE® CS..A safety option

33955948/EN – 05/2026

CS	Series:	
	C	MOVI-C® modular automation system option
	S	Safety
x	Function:	
	A	Advanced: Motion/positioning functions with safe encoder system
	B	Basic: Stop function without encoder
	L	Light: Motion functions with the EI7C FS encoder
	S	Standard: Motion functions with a safety encoder
x	Hardware design:	
	1	MOVITRAC® advanced
	2	MOVIPRO® technology without a 2nd encoder, MOVIDRIVE® modular/system/technology without a 2nd encoder
	3	MOVIPRO® technology with a 2nd encoder, MOVIDRIVE® modular/system/technology with a 2nd encoder
	5	Electronics cover of the basic device (MOVI-C® decentralized electronics)
	6	MOVIDYN®
	7	MOVIONE®
1, **2**	Design characteristic	
A	Technology version	

6.3.2 Overview of the safety options

There are 4 configurable safety options for the device.

- MOVISAFE® CSO safety option

  The STO safety subfunction is available via terminals with the MOVISAFE® CSO safety option.

- MOVISAFE® CSB safety option
  - 4 safe single-channel digital inputs or 2 safe two-channel digital inputs

  The STO and SS1-t safety subfunctions are available via safe communication and safe digital inputs with the MOVISAFE® CSB safety option.

- MOVISAFE® CSL safety option
  - 4 safe single-channel digital inputs or 2 safe two-channel digital inputs
  - 1 safe two-channel digital output

  The SBC, STO and SS1-t safety subfunctions are available via safe communication and safe digital inputs with the MOVISAFE® CSL safety option. For example, the SLS and SDI safety subfunctions are available via the EI7C FS built-in encoder for motion monitoring.

- MOVISAFE® CSS safety option
  - 4 safe single-channel digital inputs or 2 safe two-channel digital inputs

33955948/EN – 05/2026

– 1 safe two-channel digital output

The MOVISAFE® CSS safety option provides the SBC, STO and SS1-t safety subfunctions. When using a safety encoder by SEW-EURODRIVE with MOVILINK® DDI, the safety subfunctions SS1-r, SS2, SOS, SLS, SSM, SLA and SDI are available for motion monitoring. The safe EI7C FS built-in encoder is also supported. Encoders with MOVILINK® DDI (without FS) are not evaluated by the safety option. The safety subfunctions can be controlled via safe communication and safe digital inputs.

- The PROFIsafe, Safety over EtherCAT®, and CIP Safety™ profiles are available for safe communication.

The safety technology of the MOVISAFE® CSO/CSB/CSL/CSS safety options described below has been developed and tested according to the following safety requirements.

- SIL 2 according to EN 61800-5-2, EN 61508
- PL d according to EN ISO 13849-1

This was certified by TÜV Rheinland. A copy of the TÜV certificate can be requested from SEW-EURODRIVE.

6.3.3 Safe state

The safety concept is based on a safe state existing for all safe process values. For safety-related operation of the device, the switched-off torque is defined as a safe state.

A safe state of the MOVISAFE® CS..A safety option is defined as follows:

- The internal safe digital output F-DO_STO is disabled. This activates the STO safety subfunction.
- All other existing safe digital outputs are disabled.
- If safe communication is parameterized, either substitute values are sent for the data (i.e. all data is "0"), or the communication is interrupted.

6.3.4 STO safety concept

The device is supposed to be able to perform the safety subfunction "Safe Torque Off" according to EN 61800-5-2:

- The device is characterized by the optional connection of an external safety controller/safety relay. This external safety controller/safety relay disconnects the safety-related STO input via a two-pole 24 V switching signal (e.g., sourcing/sinking) when a connected command device (e.g., emergency stop button with latching function) is activated. This activates the STO function of the device. With the CSB/CSL/CSS safety options, the STO function is performed using the safety option.
- An internal structure with diagnostics prevents the generation of pulse trains at the power output stage (IGBT).
- If the internal diagnostics detects a fault, the PWM signals are permanently switched off.

33955948/EN – 05/2026

- Instead of a galvanic isolation of the drive from the supply system by means of contactors or switches, the disconnection of the STO input described here safely prevents the activation of the power semiconductors in the output stage. The rotary-field generation for the respective motor is deactivated even though the line voltage is still present.
- If the internal diagnostics of the STO circuit detects a discrepancy between the two channels, the PWM signals are locked, i.e. STO is activated. This locking requires a reset by switching the DC 24 V supply voltage of the device or the DC 24 V switching signal at the STO input F_STO_P off and back on.

6.3.5 Schematic representation of the safety concept with CSO safety option

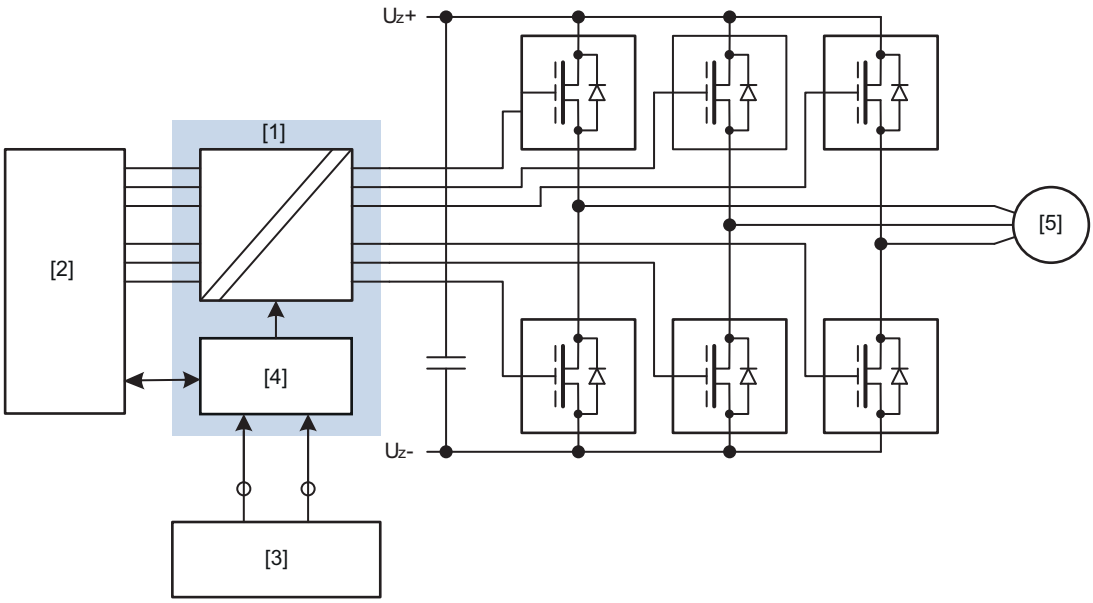

9007232454790795

[1] STO function
[2] Drive controller
[3] External safety controller (optional)
[4] Diagnostics and inhibiting unit
[5] Motor

6.3.6 Schematic representation of the safety concept with MOVISAFE® CS..A safety option

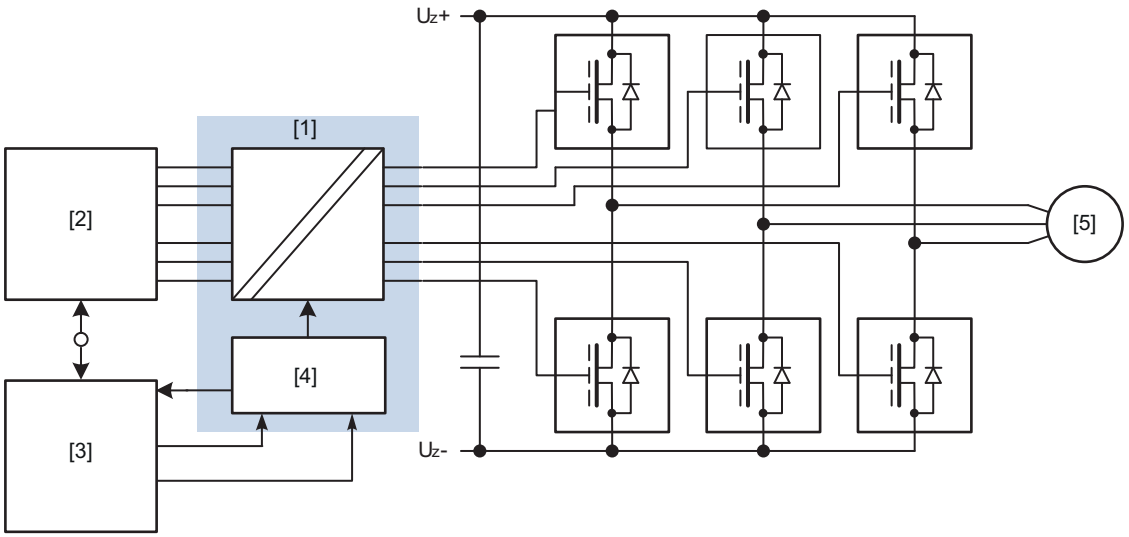

9007232462548747

[1] STO function
[2] Drive controller
[3] Safety option
[4] Diagnostics and inhibiting unit
[5] Motor

6.3.7 MOVISAFE® CS..A safety concept

Information concerning the stop categories in accordance with EN 60204-1

- The STO safety subfunction corresponds to stop category 0.
- The SS1-t and SS1-r safety subfunctions correspond to stop category 1.
- The SS2-t and SS2-r safety subfunctions correspond to stop category 2.

Pluggable safety key

The safety key must be inserted when activating the MOVISAFE® CS..A safety option and must not be removed while the safety option is active.

The parameterization data of the MOVISAFE® CS..A safety option is divided into application data and the key data set. The key data set ensures data integrity.

The application data is stored in the device. The application data is enabled with the aid of the key data set on the pluggable safety key. The safety option becomes operational only if the key data set on the pluggable safety key matches the parameterization.

33955948/EN – 05/2026

The pluggable safety key is also used to establish a location reference in the system. Since the application-related data set is enabled only with the matching key data set on the pluggable safety key, the location reference can be established in this way. It is the user's responsibility to save the location reference of the pluggable safety key in the system.

The data for safe communication is also stored on the pluggable safety key because this data has the same location reference.

This ensures that the application-related data and the communication data is available again immediately in the event of a device replacement.

The safety key contains the following data:

- Checksum of the application data set
- Checksum of the accepted data set
- Checksum bus (ParCRCBus)
- Parameter of the F-protocol

Identification and authentication

In the "Assist CS.." parameterization tool, unique identification of the device and an authentication of the user is necessary for the steps "Parameterize", "Create report" and "Confirm validation". To identify the device, enter the ID of the pluggable safety key in the login dialog of the parameterization tool. The safety key ID is printed on the safety key. Alternatively, the safety key ID can be read by the "Assist CS.." parameterization tool. To do this, perform an identity verification using the LED display of the device. This mechanism with the safety key ID ensures that the Assist CS.. parameterization tool is connected to the correct device. The user is authenticated via the entry of a password.

INFORMATION



It is essential to ensure unique identification of the device to be parameterized.

Report and safety check

When downloading the parameters to the CS..A, safety option both the application data set and the checksum of the application data of the safety key set are created. The safety option goes into operation if all tests are fault-free. From this moment on, all parameterized functions are active.

⚠ WARNING



Depending on the parameter setting, the safety option does not control the STO safety subfunction. This can cause the drive to start unexpectedly.

Severe or fatal injuries.

- Make sure that the drive does not restart automatically after parameterization of the safety option (e.g. set start inhibit, remove travel commands).

The acceptance report can be created once the parameters are downloaded. During this process, the new ParCRC value of the "application data" set is made known to the F-protocol host. The new ParCRC value must be transferred to the F-protocol host. The acceptance report must be used to perform the acceptance of the "application data" set in combination with the safety option within the system.

33955948/EN – 05/2026

After acceptance, the performed acceptance can be published via the safety option. The publication of the acceptance does not replace the acceptance itself to be carried out. For the publication of the acceptance, the "checksum of the acceptance report" of the safety option is made known.

The publication of the acceptance is not implemented in a safety-related manner and is not necessary for the safety-related operation of the safety option. The publication of the acceptance is a supporting function for the user of the safety option.

6.3.8 Safety subfunctions according to EN 61800-5-2

Introduction

The following descriptions of the safety subfunctions are based on the description according to EN 61800-5-2. For more information on how to implement and parameterize the safety subfunction in the safety option, refer to chapter "Parameterization of the safety subfunctions".

The following table shows the availability of the safety subfunctions described below, depending on the MOVISAFE® CS..A safety option used in each case:

Safety option	Safety subfunction												
	Standstill			Motion									
	STO	SBC	SS1-t	SS1-r	SS2-t	SS2-r	SOS	SLS	SSM	SSR	SDI	SLI	SLA
				Only with FS encoder									
CSO	✓	–	✓[1]	–	–	–	–	–	–	–	–	–	–
CSB	✓	–	✓	–	–	–	–	–	–	–	–	–	–
CSL	✓	✓	✓	✓	–	–	–	✓	✓	–	✓	–	–
CSS	✓	✓	✓	✓	✓[2]	✓[2]	✓[2]	✓	✓	✓	✓	✓	✓[2]

1) With suitable control

2) Not possible with EI7C FS built-in encoder

33955948/EN – 05/2026

STO – Safe Torque Off

When the STO safety subfunction is active, the power supply to the motor is interrupted and the drive cannot generate any torque. The STO safety subfunction corresponds to a non-controlled stop according to EN 60204-1, stop category 0.

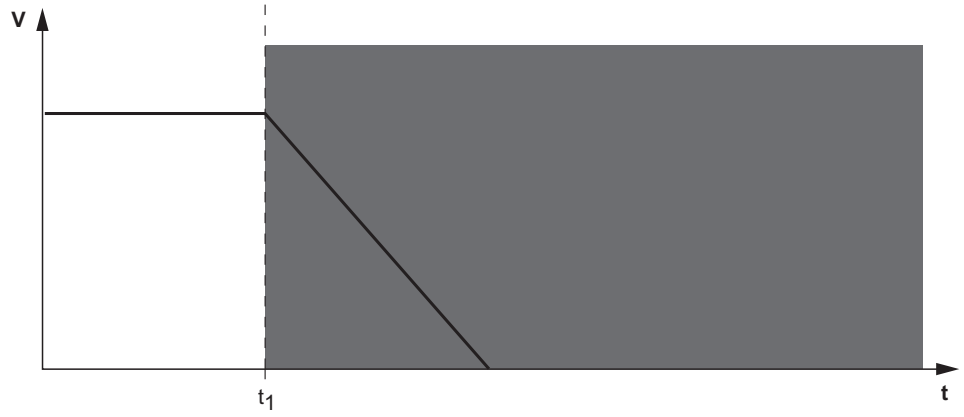

18014400480354315

■ = STO safety subfunction active
v = Speed
t = Time
t_1 = Point in time at which STO is activated.

INFORMATION

The motor coasts to a halt or is stopped mechanically.

Controlled standstill is preferred, if possible.

SBC – Safe Brake Control

The SBC safety subfunction provides a safe output signal for controlling a mechanical brake.

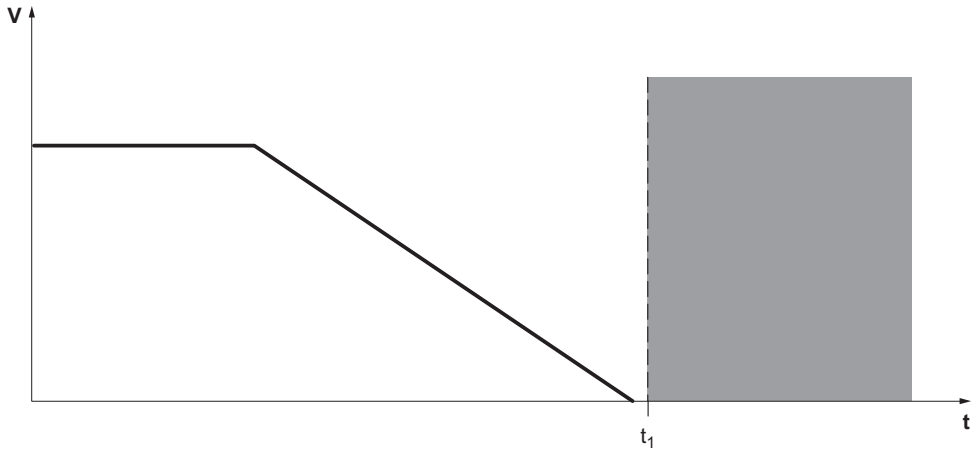

27021600043191563

■ = SBC safety subfunction active
v = Speed
t = Time
t_1 = Point in time when SBC is triggered.

33955948/EN – 05/2026

SS1-t – Safe Stop 1 with time control

When the SS1-t safety subfunction is active, the motor is brought to a standstill electrically. The STO safety subfunction will be triggered after a specified, safety-related time.

The SS1-t safety subfunction corresponds to a controlled stop of the drive according to EN 60204-1, stop category 1.

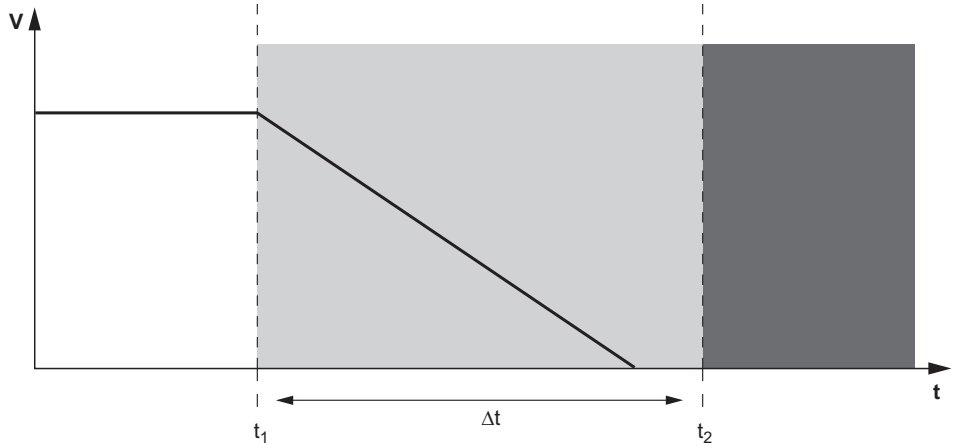

18014400480359435

= SS1-t safety subfunction monitored
= STO safety subfunction active
v = Speed
t = Time
t_1 = Point in time at which SS1-t is activated and motor deceleration is triggered.
t_2 = Point in time at which STO is activated.
Δt = Safety-related period of time

INFORMATION

- The SS1-t function does not monitor the stopping of the drive.
- The safety-related period of time Δt allows the drive to come to a stop. In the event of a fault, the drive does not come to a stop and becomes de-energized at the time t_2 (STO).

SS1-r – Safe Stop 1 with monitoring of the deceleration ramp

When the SS1-r safety subfunction is active, the motor is brought to a standstill electrically. The deceleration is monitored. The STO safety subfunction is triggered when the monitored deceleration is exceeded or when standstill is reached.

33955948/EN – 05/2026

The SS1-r safety subfunction corresponds to a controlled stop of the drive according to EN 60204-1, stop category 1.

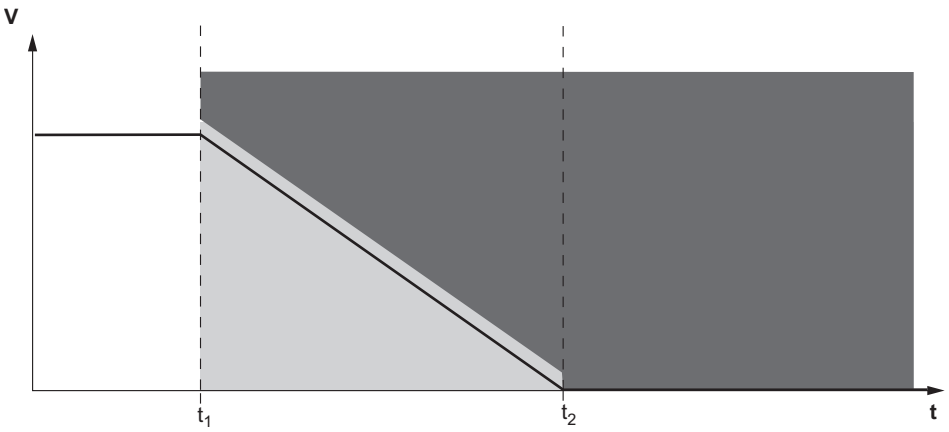

27021599735097995

= SS1-r safety subfunction monitored
= STO safety subfunction active
v = Speed
t = Time
t_1 = Point in time at which SS1-r is activated and motor deceleration is triggered.
t_2 = Point in time at which STO is activated.

SS2-t – Safe Stop 2 with time control

When the SS2-t safety subfunction is active, the motor is brought to a standstill electrically. In the idle state, the motor is held in position. The position must be safely monitored after a specified, safety-related time has elapsed (SOS function according to EN 61800-5-2). Any movement at standstill triggers the STO safety subfunction. After the STO safety subfunction has been triggered, the idle state has to be ensured, for example, by a mechanical brake.

33955948/EN – 05/2026

The SS2-t safety subfunction corresponds to a controlled stop of the drive according to EN 60204-1, stop category 2.

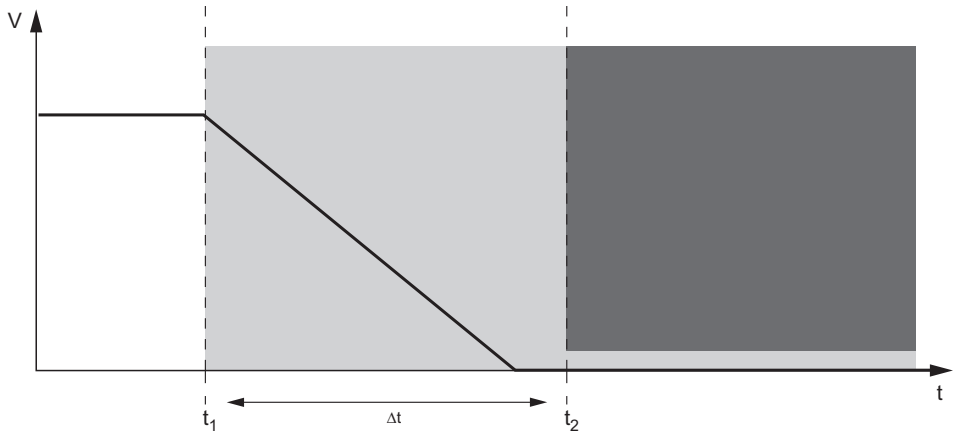

18014400684678283

= SS2-t safety subfunction monitored
= STO safety subfunction active
v = Speed
t = Time
t_1 = Point in time at which SS2-t is activated and motor deceleration is triggered.
t_2 = Point in time at which SOS is activated.
Δt = Safety-related period of time

INFORMATION

- The SS2-t safety subfunction does not monitor the stopping of the drive.
- The safety-related period of time Δt allows the drive to come to a stop. In the event of a fault, the drive does not come to a stop and only becomes de-energized at the time t_2 (STO).

SS2-r – Safe Stop 2 with monitoring of the deceleration ramp

When the SS2-r safety subfunction is active, the motor is brought to a standstill electrically. The deceleration is monitored. The position must be safely monitored after standstill (SOS function according to EN 61800-5-2). The STO safety subfunction will be triggered if the deceleration value is exceeded while stopping or movement occurs in an idle state. After the STO safety subfunction has been triggered, the idle state has to be ensured, for example, by a mechanical brake.

33955948/EN – 05/2026

The SS2-r safety subfunction corresponds to a controlled stop of the drive according to EN 60204-1, stop category 2.

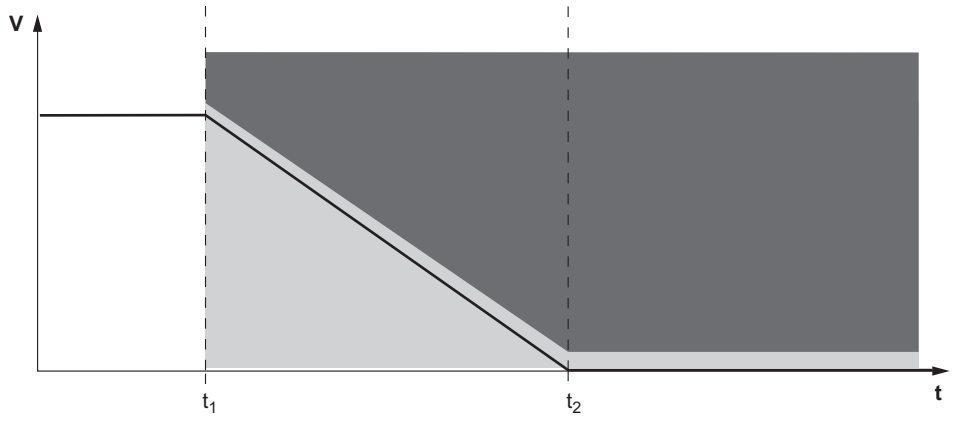

18014400480439051

= SS2-r safety subfunction monitored
= STO safety subfunction active
v = Speed
t = Time
t_1 = Point in time at which SS2-r is activated and motor deceleration is triggered.
t_2 = Point in time at which SOS is activated.

SOS – Safe Operating Stop

The SOS safety subfunction prevents the motor from deviating from the stop position by more than a specified absolute value. The drive delivers the power to keep the motor in position. If the specified absolute value is exceeded, the SOS safety subfunction will be triggered and a fault response (STO) will be initiated at the same time.

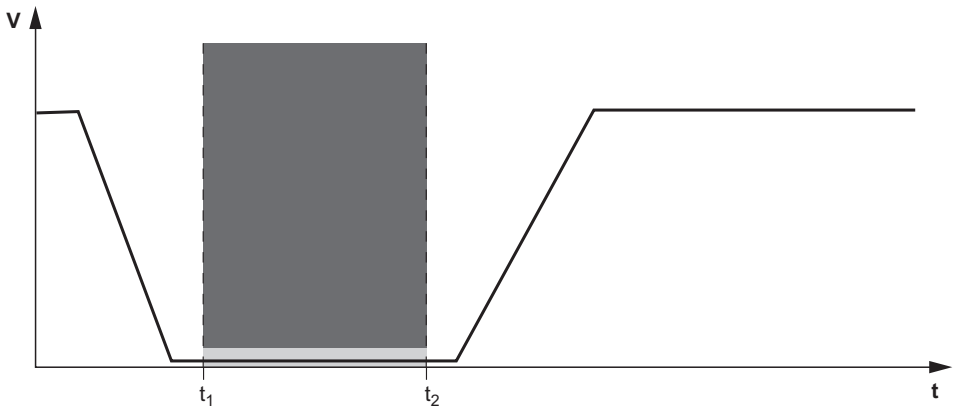

18014400480441483

= SOS safety subfunction monitored
= STO safety subfunction active
v = Speed
t = Time
t_1 = Point in time at which SOS is activated.
t_2 = Point in time at which SOS is deactivated.

33955948/EN – 05/2026

SLS – Safely Limited Speed

The SLS safety subfunction prevents the drive from exceeding a set speed. If the permitted speed is exceeded, the SLS safety subfunction will be triggered and a fault response will be initiated at the same time (usually SS1).



18014400480443915

= SLS safety subfunction monitored
= SLS safety subfunction is triggered
v = Speed
t = Time
t_1 = Point in time at which SLS is activated.
t_2 = Point in time at which SLS is deactivated.

SSM – Safe Speed Monitoring

The SSM safety subfunction monitors whether the drive exceeds a set speed. A violation of the permitted speed is signaled.



18014400480443915

= SSM safety subfunction monitored
= SSM safety subfunction is triggered
v = Speed
t = Time
t_1 = Point in time at which SSM is activated.
t_2 = Point in time at which SSM is deactivated.

33955948/EN – 05/2026

SDI – Safe Direction

The SDI safety subfunction prevents movement in an unintended direction. If this condition is violated, the SDI safety subfunction will be triggered and a fault response will be initiated at the same time (usually STO or SS1).

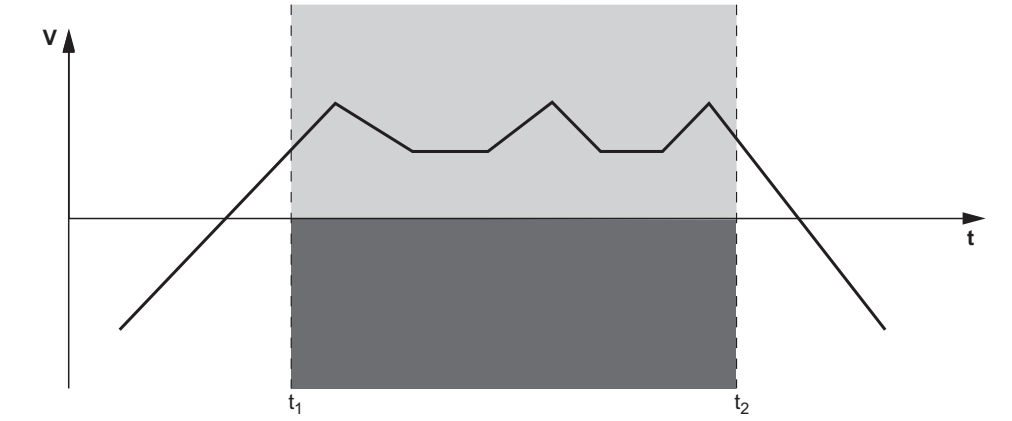

18014400480458635

= SDI safety subfunction monitored
= SDI safety subfunction is triggered
v = Speed
t = Time
t_1 = Point in time at which SDI is activated.
t_2 = Point in time at which SDI is deactivated.

SSR – Safe Speed Range

The SSR safety subfunction prevents the speed of the drive from leaving a specified range. If the permitted speed is exceeded or undershot, the SSR safety subfunction will be triggered and a fault response will be initiated at the same time (usually SS1).

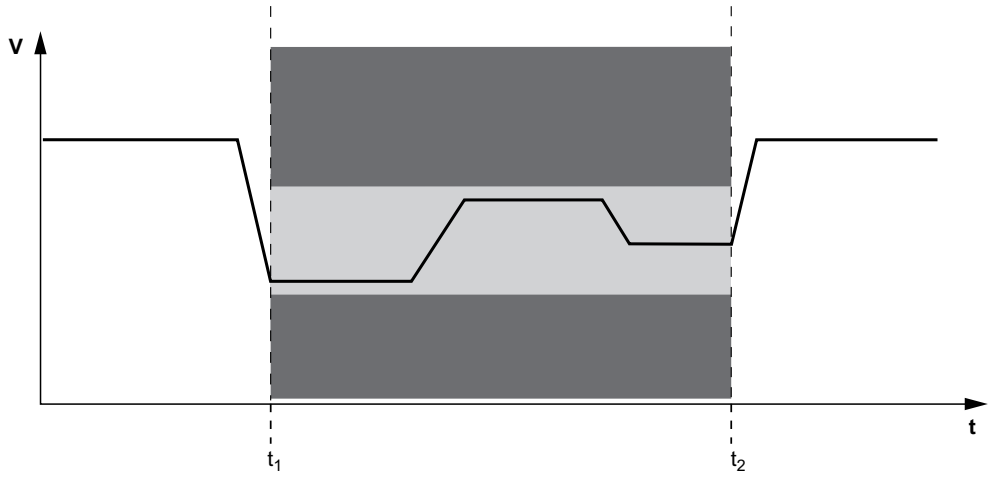

18014400914727819

= SSR safety subfunction monitored
= SSR safety subfunction is triggered
v = Speed
t = Time
t_1 = Point in time at which SSR is activated.
t_2 = Point in time at which SSR is deactivated.

SLI – Safely Limited Increment

The SLI safety subfunction prevents a movement from exceeding a specified increment. If the limit value of the increment is violated, the SLI safety subfunction will be triggered and a fault response will be initiated at the same time (usually STO).

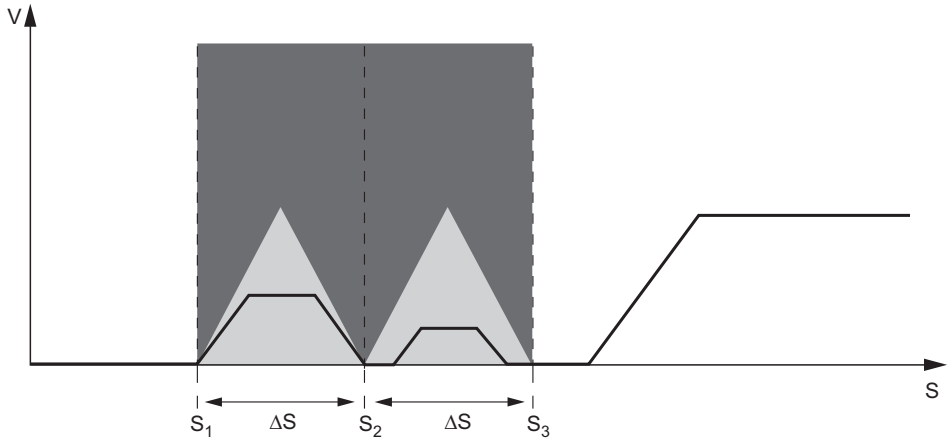

18014400480461451

= SLI safety subfunction monitored
= SLI safety subfunction is triggered
v = Speed
s = Distance
s_1, s_2 = Point at which SLI is activated.
s_2, s_3 = Point at which SLI is deactivated.
Δs = Safe increment

SLA – Safely Limited Acceleration

The SLA safety subfunction prevents a movement from exceeding a specified acceleration. If the permitted acceleration limit is exceeded, the SLA safety subfunction will be triggered and a fault response will be initiated at the same time (usually STO).

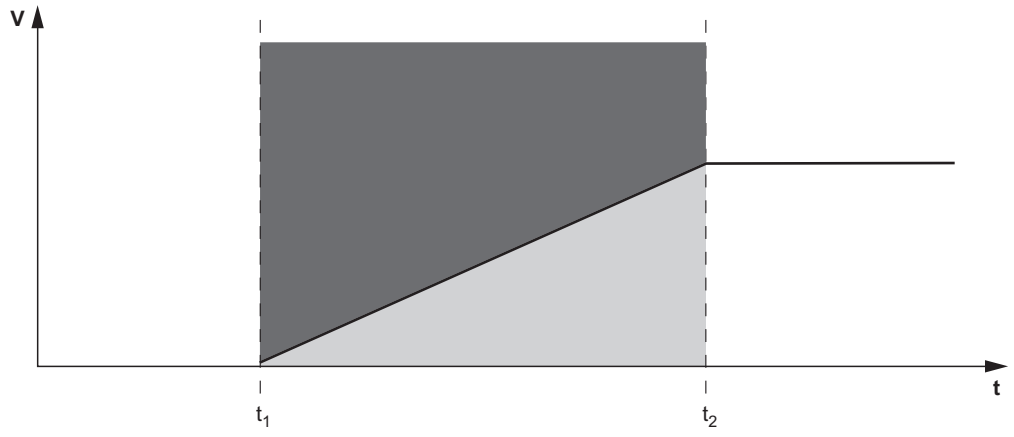

18014400480446347

= SLA safety subfunction monitored
= SLA safety subfunction is triggered
v = Speed
t = Time
t_1 = Point in time at which SLA is activated.
t_2 = Point in time at which SLA is deactivated.

33955948/EN – 05/2026

6.3.9 Limitations

- It is to be noted that if the drive does not have a mechanical brake or if the brake is defective, the drive may coast to a halt (depending on the friction and mass moment of inertia of the system). In the event of regenerative loads or with axes that are loaded with gravitational forces or driven externally, the drive can even accelerate. This must be taken into account in a risk assessment of the system/machine. Additional safety measures might have to be implemented (e.g. safety brake system).

  In the case of application-related safety subfunctions that require stopping the hazardous motion safely, an additional safety brake system may be necessary on an application-specific basis.
- When using the SS1-t function, the deceleration ramp of the drive is not monitored with respect to safety. In the case of an error, the drive might not be decelerated during the delay time, or the drive can accelerate in the worst case. In this case, the safety-related deactivation via the STO function is only activated after the set delay time has passed. The resulting hazard must be taken into account in the risk assessment of the system/machine and may need to be covered through additional safety measures, if necessary.
- The STO function cannot prevent a possible jerk or DC braking.

⚠ WARNING



The safety concept is suitable only for performing mechanical work on driven system/machine components.

Severe or fatal injuries.

Hazardous voltages are present in the connection box when the STO signal is disconnected.

- Before working on the electric part of the drive system, disconnect it from the supply voltage using an appropriate external disconnecting device and secure it against unintentional reconnection of the voltage supply.

⚠ WARNING



Electric shock due to incompletely discharged capacitors.

Severe or fatal injuries.

- Observe a minimum switch-off time of 10 minutes after disconnecting the power supply.

INFORMATION



If a brake is connected to the device, the *FCB 01 Output stage inhibit* function block must be selected in the MOVISUITE® parameter tree under [Functions] > [Drive functions]. In *FCB 01 Output stage inhibit*, the *Apply brake in event of STO* parameter is set to "On" and must not be deactivated. This ensures that when the safety subfunction is activated, the brake control switches off and the brake is applied. The brake control in the device is not safety-related.

6.3.10 Safety concept of Assist CS..

Safety parameters

For parameterization of the safety subfunctions, MOVISAFE® CS.. A has adjustable safety parameters.

33955948/EN – 05/2026

The safety parameters determine the behavior of the corresponding safety subfunctions and are therefore safety-related. All safety parameters are combined in the parameter set.

The following actions are performed when downloading the parameters in the Assist CS.. tool:

- Parameterization of the safety option.
- Generation of the "application data" checksum of the key data set on the safety key.
- A modified parameter setting clears the "validation" status.

As a result, the safety key is connected with the respective parameterization by downloading the parameters.

Test concept and test procedure

The parameters of the MOVISAFE® CS..A safety option are set using an engineering PC with "Assist CS.." parameterization tool. As the PC and the "Assist CS.." parameterization tool are not safety-related and therefore possibly not fault-free, the safety concept prescribes the following measures:

- Identification of MOVISAFE® CS..A.
- When establishing a connection to the MOVISAFE® CS..A safety option, the safety key ID must be entered in a dialog.
- Guided parameter setting procedure with the "Assist CS.." parameterization tool with integrated safety features such as plausibility check of entries during data transmission to the device.
- Completion of parameterization with subsequent provision of an acceptance report to validate the safety subfunctions.

6.4 Safety requirements

6.4.1 Introduction

The requirement for safe operation is that the safety subfunctions of the device are properly integrated into an application-specific, higher-level safety subfunction. A system/machine-specific risk assessment must be carried out without fail by the system/machine manufacturer and taken into account for the use of the drive system with the device.

The system/machine manufacturer and the user are responsible for the compliance of the system/machine with the applicable safety regulations.

The following requirements are mandatory when installing and operating the device in safety-related applications:

- Use of the approved devices
- Installation requirements
- Requirements for external safety controllers and safety relays
- Startup requirements
- Requirements for operation

33955948/EN – 05/2026

6.4.2 Approved devices

The MOVITRAC® advanced device variant is permitted for safety-related applications:

Device	Size
MOVITRAC® advanced	All sizes with CSO, CSB, CSL, CSS safety option

6.4.3 Installation requirements

- The components must be protected against conductive dirt, e.g. by installing them in a control cabinet with degree of protection IP54 in accordance with EN 60529.

  Assuming that the presence of conductive dirt can be excluded at the installation site, a control cabinet with a correspondingly lower degree of protection is also permitted if in accordance with the applicable standards, e.g. EN 60204-1. The same also applies to temporary condensation, e.g. due to rapid ambient temperature changes.
- The wiring technology must comply with the EN 60204-1 standard.
- The safe control cables must be routed in accordance with the EMC requirements. The following points must therefore be observed:
  - Single conductors can be routed within an installation space.
  - Outside a closed installation space: shielded cables must be routed permanently (fixed) and protected against external damage, or equivalent measures must be taken.
  - Adhere to the regulations in force for the application.
  - If the safe outputs and inputs are wired in a 2-channel configuration, the corresponding cables must be routed closely together.
  - The cables must have the same length. A difference in length ≤ 3% of the two cables is permitted.
  - The following maximum cable lengths must be observed:

    STO: 30 m

    F-DI: 30 m

    F-DOx: 30 m

    F-SSx: 30 m
- You must use suitable measures to ensure that the safe control cables are routed separately from the power lines of the drive. This does not apply to cables approved by SEW-EURODRIVE specifically for this application case.
- The STO circuit does not detect short circuits or cross faults in the supply line, so you must ensure the following:
  - No parasitic voltages can occur in the STO control cables
  - The external safety controller can detect a crossfault from an external potential to the STO control cables.
- The values specified for the safety components must be strictly adhered to when designing the safety circuits.
- The STO signals must not be used for feedback.
- Only grounded voltage sources with protective electrical separation (PELV) in accordance with EN 61131-2 and EN 60204-1 may be used for safety controllers/ safety relays/external sensors.
- When planning the installation, observe the technical data of the device.

33955948/EN – 05/2026

- The 0V24_Out and 24V_Out supply voltages of the device may only be used to supply the device-internal STO input. The cable length must not exceed 30 m.

  This connection variant is not permitted for STO group disconnection.
- For safety-related applications with the STO safety subfunction, the jumper plug at the STO input must be removed. In the devices with the integrated CS..A safety option, the STO function is performed exclusively via the safety option.
- When an EI7C FS built-in encoder is connected to the unit, the encoder cable must not carry a TF signal.

6.4.4 Requirements for EMC-compliant installation

When using functional safety components, SEW-EURODRIVE recommends paying particular attention to proper EMC-compliant installation. This pays off, for example, when using the encoders for safety purposes. Additional diagnostics are performed to detect faults at an early stage. Malfunctions caused by faulty EMC installation can lead to incorrect results during diagnostics and thus restrict the availability of the system.

- You must use suitable measures to ensure that the safe control cables are routed separately from the power cables of the drive. This does not apply to cables approved by SEW-EURODRIVE specifically for this application case.

  Use cable ducts with at least 2 chambers and an uninterrupted separation strip for spatial separation of control cables and energy cables.
- The control cables include the following connection cables:
  - Encoder cables
  - Analog sensor cables
  - Communication cables
  - Extra-low voltage cables
- The energy cables include the following connection cables:
  - Power supply cables
  - Motor cables
  - Brake cable
- Use closed cable ducts made of galvanized sheet steel for the fixed routing of cables in systems so that shielding is provided in all directions. Connect the joints of the cable ducts with each other over a large area.
- When grounding cable ducts (e.g. with grounding straps), ensure that the contact surface is as large as possible due to slotted holes and other mounting openings.

33955948/EN – 05/2026

- For high-frequency-suitable grounding, use special grounding straps whose connection points have a sufficiently large surface area. Do not use crimped eyelets.

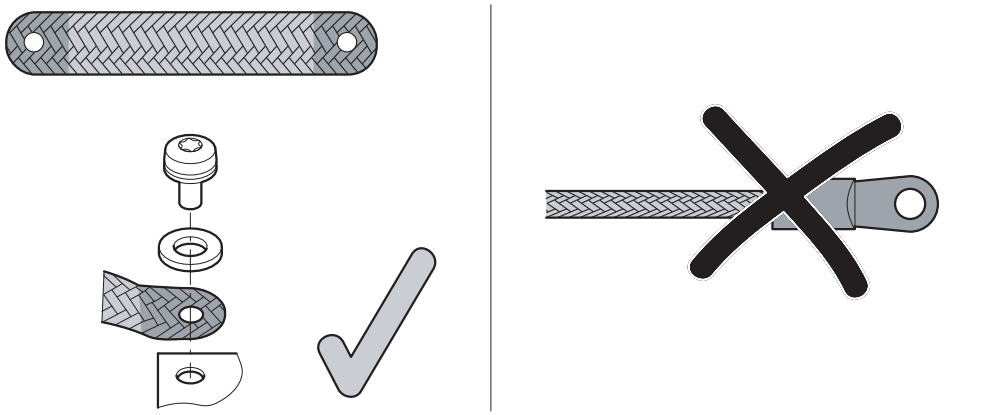

55206489355

  - Mount grounding straps over the entire surface on well-conducting surfaces. Contact points must be free of paints and other substances. Do not use washers:
- The drag chains are made of plastic. Grounding must be conducted separately.
  - Grounding cables suitable for high-frequency use must be routed separately.
  - Grounding cables suitable for high-frequency use should be designed as short as possible.
  - Grounding cables suitable for high frequencies must not be used as equipotential bonding.
  - The cable should consist of a large number of fine wires (surface, flexibility).
  - The connection pieces should be suitable for HF.
- Cable carriers do not provide shielding or separation of cable types. The following possible solutions are available:
  - Separation of the cable types into several cable carriers.
  - Only use shielded cables.
- Route cables of the various cable types with a distance of at least 200 mm to each other.
- Observe the spatial separation also in distributors. Use metal distributors with partition walls or several individual distributors.
- Always keep the cables short. Observe the permitted cable lengths specified in the product manuals of the products used!
- Keep the necessary reserve loops as short as possible and do not bundle them closely with other cables.
- The shield must be connected on both sides, as shields connected on one side have no effect against the magnetic disturbances.
- Connect shield terminals directly to the local grounding star point.
- For shielded cables, only use connectors with special contact springs for the shield. Follow the manufacturer's instructions.
- Connect the shield to the metal housing over a large area using a suitable cable bushing or shield terminals. Do not use pigtails for shield connection in terminal strips. The pigtail is an antenna that greatly weakens the shielding effect.

33955948/EN – 05/2026

6.4.5 Startup requirements

- To validate the implemented safety subfunctions, the safety subfunctions must be checked and documented after successful startup.
- When doing so, the restrictions for the safety subfunctions in chapter "Restrictions" must be taken into consideration. Non-safety-related parts and components which affect the test result (e.g. motor brake) must be deactivated.
- In order to use the device in safety-related applications, it is essential that you perform and record startup checks for the disconnecting device and correct wiring.
- For the CS..A safety options, the startup check and logging is supported by the "Assist CS.." parameterization tool with an acceptance report.

INFORMATION

- In order to avoid a hazard in the intended application when a fault occurs, the user must check whether the fault response time of each safety subfunction is shorter than the maximum permissible fault response time of the application. The maximum permissible fault response time must not be exceeded!
- The user must ensure implementation of the requirements of the required safety integrity level (SIL) in accordance with EN 61508 or performance level (PL) pursuant to EN ISO 13849-1.

6.4.6 Requirements for operation of the STO safety subfunction

- Operation is only permitted within the limits specified on the data sheets.
- The built-in diagnostic function is limited in the case of a permanently enabled or permanently disabled STO safety subfunction. Advanced diagnostic functions are only performed when the status of the STO safety subfunction changes. This is why the safety subfunction must be triggered with connected line voltage at least once every 12 months for PL d according to EN ISO 13849-1 and SIL 2 according to EN 61800-5-2 to achieve complete test coverage. Adhere to the following test procedure for this purpose.

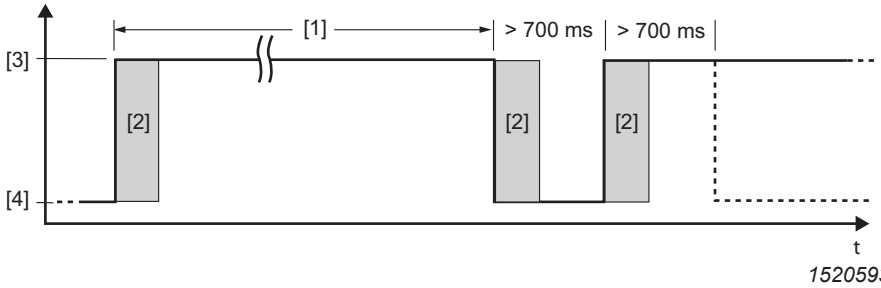

15205932683

[1] Maximum 12 months for PL d/SIL 2
[2] Internal diagnostics
[3] High: No STO
[4] Low: STO active

33955948/EN – 05/2026

- To achieve complete test coverage after a device reset (e.g. after switching on the supply voltage), the test transition (STO active → STO not active) may be started after > 700 ms at the earliest. The device signals the "ready for operation" or "STO – Safe Torque Off" state if it is not in fault state.
- A detected hardware fault in the internal switch-off channels for STO will lead to a locking fault state in the device. If the fault is reset (e.g. by switching the supply voltage on/off or by activating the STO safety subfunction for at least 30 ms), a complete test with internal diagnostics in accordance with the above-mentioned test procedure must be performed subsequently. If the error occurs again, replace the device or contact SEW-EURODRIVE Service.

6.4.7 Requirements for the external safety controller

If the CSO safety option is used, a safety controller or a safety relay must be used. The following requirements apply analogously:

– The safety controller and all other safety-related subsystems must be approved for at least the safety class required in the overall system for the respective application-related safety function.

The following table shows an example of the required safety class of the safety controller:

Application	Requirement for safety controller
Performance level d according to EN ISO 13849-1, SIL 2 according to EN 62061	Performance level d according to EN ISO 13849-1 SIL 2 according to EN 61508

- The wiring of the safety controller must be suitable for the endeavored safety class (see manufacturer's documentation). The STO input of the device can be switched with 2 poles (sourcing/sinking) or with 1 pole (sourcing).
- The values specified for the safety controller must be strictly adhered to when designing the circuit.
- Only guards with back-step protection may be used at the STO input of the device. The guards must be connected to the CS..A safety option via a safety relay or a safety controller.
- To stop the drive in an emergency in accordance with EN 60204-1, emergency stop control devices must be connected to the STO input of the device (CSO safety option) as follows:
  - via the CS..A safety option
  - via a safety relay
  - via a safety controller
- To ensure protection against an unexpected restart in accordance with EN ISO 14118, the safe control system must be designed and connected in such a way that resetting the command device alone does not lead to a restart. This means that a restart may only be carried out after a manual reset of the safety circuit.
- If no fault exclusion is used for the STO wiring in accordance with DIN EN ISO 13849-2 or DIN EN 61800-5-2, the external safety device must detect the following faults with regard to the STO wiring within 20 s depending on the connection type:
  - Two-pole sourcing/sinking:

    Short circuit of 24 V at F_STO_P1 (Stuck-at 1)

33955948/EN – 05/2026

Short circuit of 0 V at F_STO_M (Stuck-at 0)

– Dual-channel serial sourcing output:

  Fault exclusion is mandatory

– Single-pole sourcing:

  Short circuit of 24 V at F_STO_P (Stuck-at 1)

- In the "Two-pole sourcing/sinking" connection type, test pulses may occur in both the on and off states.
  - The test pulses in the sourcing and sinking channel must not exceed 1 ms.
  - The next switch-off test pulse in the sourcing or sinking channel must only occur after a 2 ms time period.
  - A maximum of 3 switch-on test pulses may be generated in sequence at an interval of 2 ms. Wait for at least 500 ms after any packet before you generate another switch-on test pulse or another switch-on test pulse packet.
  - The signal levels must be read back by the safety controller and compared to the expected value.
- In the "Single-pole sourcing output" connection type, test pulses may occur in both the on and off states..
  - The test pulse on the sourcing channel must not exceed 1 ms.
  - The next switch-off test pulse may only occur after a time period of 2 ms at the earliest.
  - A maximum of 3 switch-on test pulses may be generated in sequence at an interval of 2 ms. Wait for at least 500 ms after any packet before you generate another switch-on test pulse or another switch-on test pulse packet.
  - The signal levels must be read back by the safety controller and compared to the expected value.

6.4.8 Sensor and actuator requirements

- The project planner and the user of the system or machine are responsible for the number and utilization of external sensors and actuators for connection with the safe inputs and outputs of the MOVISAFE® CS..A safety option.
- In order to achieve the required safety level (PL/SIL), you must use suitable and appropriately qualified sensors and actuators and observe the permissible wiring diagrams and information in chapters "Connection examples for safe digital inputs (F-DI.)" and "Connection examples for safe digital outputs (F-DO.)". The permissible encoders are described in chapter "Encoder requirements".

6.4.9 Requirements for stopping in an emergency according to EN 60204-1 (emergency stop)

The MOVISAFE® CS..A safety option, in combination with an emergency stop command device and the external control, is suitable for implementing an emergency stop in accordance with EN 60204-1.

⚠ WARNING



In the case of a pending travel command, the drive restarts after acknowledgment of the safety option.

Severe or fatal injuries.

- Cancel the travel command before acknowledging the safety option.

33955948/EN – 05/2026

6.4.10 Encoder requirements

General requirements

Users must ensure that the system moves at a speed greater than the minimum speed at least every 3 months.

The minimum speed at the motor shaft must have the following values:

- EI7C FS built-in encoder: 50 rev/min
- All other encoders: 10 rev/min

This also limits the minimum speed in user units.

Safety encoders approved by SEW-EURODRIVE

AC motors/asynchronous servomotors

- EK8Z/EK9Z/AK8Z
- EI7C FS

The EK8Z, EK9Z and AK8Z safety encoders must be turned off and back on every 12 months so that the encoder performs internal diagnostics.

Servomotors

- EK0Z
- AK0Z

In order to implement a safety subfunction with EK0Z or AK0Z encoders, the motor must be started with SERVO control mode.

The following inverter settings are recommended:

- Activation of lag error monitoring
- Activation of speed monitoring
- Activation of encoder monitoring

Quantization error

Position

The actual position value is formed directly from the encoder increments. On the basis of one encoder revolution, this results in the following quantization fault for the actual position value, which is included in all position functions:

- EI7C FS: 7.5°
- EK8Z: 0.53°
- EK9Z: 0.53°
- AK8Z: 0.27°
- EK0Z: 4.3°
- AK0Z: 4.3°

Speed

The speed calculation determines the mean speed in the time range set via the filter time speed:

Quantization fault_v in min-1 =

33955948/EN – 05/2026

(15 s x min-1) × scaling_factor_denominator / (scaling_factor_numerator x parameterized_filter_time)

Parameters involved (CSS..A):

- *Scaling_factor_numerator* (= PPR count of the selected encoder):
  - 8708.1 (encoder 1)
- *Scaling_factor_denominator*: 1

  The scaling factor is fixed based on the configured encoder type.
- *Parameterized_filter_time*:
  - 8708.3 (encoder 1)

In the case of safety encoders with MOVILINK® DDI, an additional fault of 0.4% of the actual speed is added to the process-related quantization fault:

Fault_v_DDI = Actual speed x 0.4% + Quantization fault_v

The speed calculation for the EI7C FS encoder determines the average speed over the last 4 recorded encoder increments. The response time of the encoder evaluation is thus dependent on the actual speed. The fault in the calculated speed value equals a maximum of 1% of the actual speed:

Fault_v_EI7C FS = Actual speed x 1%

Setting the *Filter time speed HTL (8708.4)* parameter makes it possible to filter the calculated speed via a sliding average value filter with the parameterized length.

Acceleration

The acceleration calculation determines the mean acceleration in the time range set via the filter time acceleration. The quantization fault decreases with increasing filter time. In return, the response time increases in accordance with the filter time.

Quantization fault_a in min-1 s =

(120 s x min-1) × scaling_factor_denominator / (scaling_factor_numerator x (parameterized_filter_time)^2)

Parameters involved (CSS..A):

- *Scaling_factor_numerator* (= PPR count of the selected encoder):
  - 8708.1 (encoder 1)
- *Scaling_factor_denominator*: 1

  The scaling factor is fixed based on the configured encoder type.
- *Parameterized_filter_time*:
  - 8708.3 (encoder 1)

In the case of safety encoders with MOVILINK® DDI, an additional fault of 0.6% of the actual acceleration is added to the process-related quantization fault:

Fault_a_DDI = Actual acceleration x 0.6% + Quantization fault_a

Counting direction

For the process values to have identical signs in the inverter as well, the encoder parameter *Counting direction (8708.6)* of the MOVISAFE® CS..A safety options must be set as follows, depending on the inverter parameters *Direction of rotation reversal (8362.2)* and *Counting direction (8381.6)*.

33955948/EN – 05/2026

Encoder parameter: • *Counting direction (8708.6)*	Inverter parameters: • *Direction of rotation reversal (8362.2)* • *Counting direction (8381.6)*	
8708.6 = Normal	8362.2 = Off 8381.6 = Normal	8362.2 = On 8381.6 = Inverted
8708.6 = Inverted	8362.2 = On 8381.6 = Normal	8362.2 = Off 8381.6 = Inverted

Preventing the mechanical limit speed from being exceeded

To prevent the mechanical limit speed of the encoder from being exceeded, the following overspeed limits are monitored by the MOVISAFE® CS..A safety options.

Encoder type	Overspeed limit min^{-1}	Mechanical limit speed of the encoder min^{-1}
EI7C FS	3800	5700
EK8Z/AK8Z/ EK9Z	5500	6000

INFORMATION

Exceeding the overspeed limit results in a fault message in the safety option with the fault response "STO" within 13 ms for the EI7C FS built-in encoder or 17 ms for safety encoders with MOVILINK® DDI. The fault response is executed by the STO circuit within another 2 ms.

Measures in the application must ensure that the mechanical limit speed is not reached during this time (13 ms/17 ms).

6.4.11 Encoder cable requirements

- Use a shielded encoder cable. Connect the shield at both ends.
- Max. length of the encoder cable: 100 m
- Use the prefabricated encoder cables from SEW-EURODRIVE. Observe the following requirements if you use other encoder cables:
  - Encoder cable length ≤ 50 m

    The cross section of each core of the encoder cable must be ≥ 0.25 mm^2. The resistance load per unit length of the cores must not exceed 78 Ω/km (at 20 °C).
  - Encoder cable length > 50 m:

    The cross section of the cores for the encoder voltage supply and GND must be ≥ 0.5 mm^2. The resistance load per unit length of these cores must not exceed 39 Ω/km. The resistance load per unit length of the signal cores must not exceed 78 Ω/km (at 20 °C).
  - The encoder cable may have the following maximum capacitances per unit length:

    Capacitance per unit length core/core: CA' = 70 pF/m

    Capacitance per unit length core/shield: CS' = 120 pF/m

– In the signal path from the encoder to the inverter, the encoder signals must not branch off to other devices.

The encoder cable may not conduct any signals other than the encoder signals, i.e. the encoder signals must not be conducted with other signals in the same cable. The cores of encoder signals must be in twisted pairs as follows:

- U_B and GND
- A+ and A-
- B+ and B-

6.4.12 Acceptance

The system manufacturer must perform an overall evaluation in order to determine the safety of a machine or a system. The effectiveness of each risk minimization must be checked. It must also be checked if the required safety integrity (SIL and/or PL) is reached for each implemented safety function.

To validate the safety integrity level, you can use the "SISTEMA" calculation tool from the "Institut für Arbeitsschutz" (Institute for Occupational Safety and Health of the German Social Accident Insurance).

6.5 Safe digital inputs (F-DI.)

The safe digital inputs (F-DI.) are connected at terminal X60. The following sections explain and describe the permitted connection options.

Within the MOVISAFE® CS..A safety options, signal processing of the safe digital inputs is performed in two-channel mode. The safe digital inputs are therefore suitable for applications up to SIL 2 pursuant to EN 61508 and performance level d pursuant to EN ISO 13849-1. The following external sensors to be connected and their wiring must be in compliance with the required safety class.

- Sensors that either switch the sensor supply F-SSx with active pulsed voltage supply through to a safe digital input (F-DIx) or block it. The time behavior of the pulsed voltage supply must not be influenced by the sensor.
- Electronic sensors or evaluation devices that automatically generate test pulses (switch-on or switch-off pulses) on the input signals, the duration of which is < 1 ms.
- Any signal sources that generate a DC input signal within the scope of the specification of F-DIx.

Note the wiring diagrams in the chapter "Electrical installation" > "Connection examples for safe digital inputs (F-DI..)". The range of connection variants might be limited depending on the sensor type. Note in addition the chapter "Requirements for external sensors and actuators" (→ 🗎 212) as well as the general installation regulations.

Possible contact bounce and interference can be filtered out by a parameterizable input filter. Contact bounces and interferences that are shorter than the set filter time are removed from the signal.

Unassigned inputs need not be wired. An open input is always read as a "0" signal. The safe state of the safe digital inputs is the output of "logical 0" on the associated process values.

The MOVISAFE® CS..A safety option evaluates the safe digital inputs as follows:

33955948/EN – 05/2026

"Single-channel" connection type (NC):

Logic level input terminal F-DI.	Process value F-DI.
0	0
1	1

"Two-channel, equivalent" connection type (NC / NC):

Logic level input terminal F-DI.	Logic level input terminal F-DI. + 1	Process value F-DI.
0	0	0
0	1	0
1	0	0
1	1	1

"Two-channel, non-equivalent" connection type (NC / NO):

Logic level input terminal F-DI.	Logic level input terminal F-DI. + 1	Process value F-DI.
0	0	0
0	1	0
1	0	1
1	1	0

With paired evaluation, 2 safe digital inputs F-DI. are combined into one input pair, which has an effect on a common process value.

The assignment is made according to the following table:

Input terminal	Input pair	Assigned process value
F-DI0	F-DI0/1	F-DI0
F-DI1		
F-DI2	F-DI2/3	F-DI2
F-DI3		

6.5.1 Discrepancy time monitoring

The safety option performs discrepancy time monitoring for input pairs in the "two-channel, equivalent" and "two-channel, non-equivalent" connection types. The discrepancy time monitoring verifies whether the two input signals are delivering fault-free levels that match the switching state of the sensor. A deviation is tolerated for the parameterized discrepancy time. An input fault occurs if the deviation from the expected signal state exceeds the discrepancy time. The discrepancy time can be adjusted for each input pair via a parameter.

33955948/EN – 05/2026

The safety option executes a switch test function for input pairs in the "two-channel, equivalent" and "two-channel, non-equivalent" connection types to verify the correct switching behavior of the connected switch after a discrepancy fault is detected. The switch test function can be activated and deactivated for each input pair via a parameter. The switch test function assumes that the switch contacts are moved into the opened/activated state after the occurrence of the discrepancy fault so that the two input signals assume the required state for the switch test:

- "Two-channel, equivalent" connection type
  - F-DI. = logical "0"
  - F-DI. + 1 = logical "0"
- "Two-channel, non-equivalent" connection type
  - F-DI. = logical "0"
  - F-DI. + 1 = logical "1"

Only in this case can the discrepancy fault be acknowledged; acknowledgment is otherwise impossible and the input remains in the discrepancy fault.

6.5.2 Interlocking

A latching function is available for the safe digital inputs. This function can be activated via a parameter using the "Assist CS.." parameterization tool. Interlocking prevents a safety subfunction activated via the safe digital inputs from being deactivated without user intervention via the change in input signals from the "0" state to the "1" state. Interlocking sets the process value of the safe digital input to logical "0" until an acknowledgment has occurred.

Unlatching can occur as follows:

- Via a safe digital input that is parameterized as "Acknowledge latching safe digital input".
- Via a safe digital input that is parameterized as "Acknowledge latching safe digital input and error".
- Via the "Acknowledge F-DI" bit in the safe process output data.

The safe digital inputs with active parameterization remain at logical "0" after each activation of the safety option until an acknowledgment has been carried out.

Unlatching is performed by a 0 → 1 edge. If a permanent high signal is present on the F-DI to which the unlocking function has been assigned, this is indicated by a warning after 20 seconds. The safe digital inputs with active parameterization remain at logical "0" after each activation of the safety option until an acknowledgment has been carried out.

If one of the following functions is assigned to the safe digital input, the latching function of an F-DI must not be activated:

- Acknowledge faults
- Unlatch F-DI
- Unlatch F-DI and acknowledge faults
- Muting
- Test mode

33955948/EN – 05/2026

6.5.3 Signal monitoring

The signal monitoring detects when the input signal is in an undefined state (unstable state) for too long. The maximum duration for which an unstable state is permitted is calculated from the set filter time multiplied by the parameter value of the parameter *Signal monitoring* (Index 8704, Subindex 8). The function can also be deactivated with the value "0" via the *Signal monitoring* parameter. The safety option responds with an input fault if the signal monitoring is active and the maximum duration has been exceeded.

6.5.4 Pulsed voltage supply and line diagnostics

For information about parameterization and operating principles, refer to chapter "Startup".

If line diagnostics is used for a safe digital input F-DI.., the following assignment between the sensor supply F-SS.. and the safe digital input F-DI.. must be adhered to:

- F-DI00, F-DI02 via the respective sensor to F-SS0.
- F-DI01, F-DI03 via the respective sensor to F-SS1.

Line diagnostics can be selected separately for each input.

If line diagnostics is not active (e.g., for sensors with OSSD output), the sensors can be supplied either from F-SS0 / F-SS1 or from another +24 V supply that has the same ground reference.

⚠ WARNING



Danger due to incorrect setting of the parameter *connection type* when connecting two-channel sensors. There is no redundancy or discrepancy check with the "one-channel" setting.

Severe or fatal injuries.

- When connecting two-channel sensors, you must set the parameter *connection type* to "two-channel (non-equivalent/equivalent)".

Only the connection variants shown below are permitted for safe applications! Also note the assignment of the connection variants of the safe digital inputs to the category structures pursuant to EN ISO 13849-1.

6.6 Safe digital output (F-DO00)

6.6.1 General information

Signal processing of the safe digital output within the MOVISAFE® CS..A safety option is performed in two channels. The safe digital output can therefore achieve SIL 2 pursuant to EN 61508 and performance level d pursuant to EN ISO 13849-1. The external actuators to be connected and their wiring must comply with the respective required safety class.

The actuators can be connected to the safe digital output F-DO00 (not with MOVISAFE® CSB) via two channels, namely a sourcing/sinking output, or via one channel, namely a sourcing output.

The following functions can be assigned to the safe digital output:

33955948/EN – 05/2026



⚠ WARNING

When using a safe brake control (e.g. SBM) and changing the function to "F-PA only" or "STO" can cause the load to fall in gravity-loaded applications.

Severe or fatal injuries.

- When using a safe brake control, you must use the "SBC" or "SBC + F-PA" function.

- Only F-PO

  Control of the safe digital output F-DO takes place via the safe process data. If no safe process data has been activated, the safe digital output is open (logically "0").

- STO

  F-DO behaves like F-DO_STO. Control via safe process data is not possible.

- SBC

  The safe digital output F-DO00 takes over the DB0 brake control function by assigning the SBC function. In this way, the safe digital output F-DO00 is simultaneously switched with the DB00 brake output. The brake application delay that is parameterized in the drive train is taken into consideration when this takes place. This means that the DB00 brake output does not need to be connected separately to the SBM.

- SBC + F-PO

  The safe digital output F-DO00 takes over the DB0 brake control function by assigning the SBC function. In this way, the safe digital output F-DO00 is simultaneously switched with the DB00 brake output. The brake application delay that is parameterized in the drive train is taken into consideration when this takes place. This means that the DB00 brake output does not need to be connected separately to the SBM.

  In addition, the safe digital output F-DO can be controlled via the safe process data. If no safe process data has been activated, the safe digital output is permanently open (logically "0").

Set the respective configuration during startup using the "Assist CS.." parameterization tool.

One-pole, sinking digital outputs are not permitted.

It is not necessary to use shielded cables for all safe digital outputs.

Note the dependency of the achieved performance level (PL) and SIL on the selected connection variant of the safe digital outputs. A maximum switching frequency of 10 Hz is permitted for the safe digital output F-DO00. The switching state of the safe digital output must be stable for at least 2 seconds at least once within 60 seconds. If an error is detected by diagnostics, the "Output error" error response occurs, which disables all outputs. The consequence of this is that the respective digital output is switched to the "open" safe state.

Diagnostics can be activated optionally for the safe digital output F-DO00. Diagnostics safely detects a wire break in the interrupted output current circuit.

If a wire break is detected, the "Output error" error response occurs, which disables all outputs.

The safe digital output F-DO00 is equipped with an optional wire break monitoring function. Wire break monitoring checks whether the connected actuator is consuming a minimum current. If the actuator current is below the minimum value, the MOVISAFE® CS..A safety option detects this as an open circuit.

33955948/EN – 05/2026

Activate wire break monitoring only if you are sure that the current consumption of the actuator is always above the minimum current (see chapter ""Technical data" > "Safe digital outputs"" (→ 🗎 74)).

In standalone operation, the outputs of the safety option can be safely disabled. This means that the safe outputs are switched at the same time as the internal STO output or with a time delay, depending on the parameterization. The outputs can also be set safely via a safe fieldbus, e.g. to unlock a door lock when the machine is in the idle state.

One safe F-DO digital output can be used to control up to 10 STO inputs to units of the MOVI-C® modular system or one STO input and one SBM safe brake module.

⚠ CAUTION



Thermal overload of the brake rectifiers BMK/BMV due to test pulses of the safe digital output F-DO.

Destruction of the brake rectifier BMK/BMV.

- Do not connect the brake rectifier BMK/BMV to the safe digital output F-DO.
- Connect the brake rectifier exclusively to the brake output DB00 of the unit.

6.6.2 Capacitive loads

- A capacitive load of no more than 10 nF is allowed to be connected to the output without any additional measures. Capacitive loads often occur in electronic assemblies as buffer capacitors.

  If the capacitive load has a diode in series to its input, the maximum load capacity permitted is 12 µF. This diode is often installed as polarity protection diode in electronic assemblies.
- If the capacitive load is not known or is higher than 10 nF, the inrush current must be limited to the permitted values of the output pursuant to EN 61131-2.

INFORMATION



Due to the thermal load of the output components, the maximum switching frequency of the digital outputs in the presence of capacitive loads must be limited to the value specified in chapter "Technical data - Functional safety" > "Safe digital outputs".

6.6.3 Inductive loads

Inductive loads are, for example, relays, contactors, valves.

- Inductive loads always must be connected between sourcing and sinking outputs.
- The energy stored in the load inductance, which depends on the inductance value and the current, may not exceed the values specified in chapter "Technical data".

33955948/EN – 05/2026

NOTICE

Operation of inductive loads without freewheeling diode can damage the MOVISAFE® CS..A safety option.

Damage to the MOVISAFE® CS..A safety option

- Inductive loads must always be connected via a freewheeling diode. The safe digital outputs of the MOVISAFE® CS..A safety option do not have a freewheeling diode.
- Varistors and other protection elements are not permitted.

6.6.4 Ohmic loads

Light bulbs are examples of ohmic loads.

- Lamps can be connected to display statuses. Note that incandescent and halogen lamps have an increased cold current when switched on. The cold current must not exceed the permitted output current pursuant to EN 61131-2.

6.6.5 Information about line diagnostics and test pulses

To monitor the cabling, the output circuit generates test pulses and thereby detects faults in the external cabling. This means the output voltage is interrupted briefly (pulsed). The maximum duration of the interruption can be set in the F-DO parameter *Maximum test duration*. The required duration of test pulses is determined by the capacitances in the connected load, which affect the line diagnostics.

For safe disconnection of MOVISAFE® CS..A with a maximum of 10 MOVITRAC® advanced units, a test pulse duration of 1 ms is to be used.

The total capacitance must not exceed 1 µF with the maximum test pulse duration (5000 µs).

For the 24 V switching output F-DO00, line diagnostics is always active regardless of the parameter setting.

⚠ WARNING



When line diagnostics is deactivated, the MOVISAFE® CS..A safety option cannot detect a short circuit between a sourcing output (F-DO.._P) and the +24 V supply voltage, or between a sinking output (F-DO.._M) and the reference potential.

Severe or fatal injuries.

Install the wiring in such a way that no short circuit is possible:

- Between a sourcing output (F-DO.._P) and the +24 V supply voltage.
- Or between a sinking output (F-DO.._M) and the reference potential.

The safe digital output F-DO00 is equipped with optional wire break monitoring. Wire break monitoring checks whether the connected actuator is consuming a minimum current. If the actuator current is below the minimum value, the MOVISAFE® CSL safety option detects this as an open circuit.

Activate wire break monitoring only if you are sure that the current consumption of the actuator is always above the minimum current (see chapter ""Technical data" > "Safe digital outputs"" (→ 🗎 74)).

33955948/EN – 05/2026

6.6.6 Internal safe digital output F-DO_STO

The CS..A safety options have one internal safe digital output F-DO_STO for switching the device-internal STO function of the inverter.

A maximum switching frequency of 10 Hz is permitted for the internal safe digital output F-DO_STO. The switching state of the safe internal digital output F-DO_STO must be stable on "1" or stable on "0" at least once within 60 seconds for at least 2 seconds (2.5 seconds with activated extended diagnostics).

The internal safe digital output F-DO_STO is always operated in the connection type "two-channel sourcing output" and must only be used for the STO function of the inverter. If the diagnostics implemented for the internal safe digital output F-DO_STO detects a fault, the error response "output error" occurs, which disables all outputs.

6.7 Data exchange with higher-level controller

6.7.1 Introduction

Devices with integrated safety option support parallel operation of standard and safe communication via a bus system or network. Safe communication is possible via PROFIsafe, Safety over EtherCAT®, and CIP Safety™.

PROFIsafe communication is possible via PROFINET. To that end, the basic device with integrated safety option must be connected to a fail-safe controller (F-PLC) via PROFINET, or the basic devices with integrated safety option are connected to a MOVI-C® CONTROLLER that is connected to a fail-safe controller (F-Host) via PROFINET IO.

Safety over EtherCAT® communication is possible via EtherCAT®. To that end, the device with integrated safety option must be connected to a fail-safe controller (F-PLC) via EtherCAT®/SBus^{PLUS}.

CIP Safety™ communication is possible via EtherNet/IP™. To that end, the basic device with integrated safety option must be connected directly to a fail-safe controller (F-PLC) via EtherNet/IP™.

To control safety subfunctions and to evaluate the responses from the safety option via PROFIsafe, Safety over EtherCAT®, or CIP Safety™ take into account the assignment of the individual bits in the F-process input/output data.

6.7.2 PROFIsafe safety protocol

Number of safety options on the MOVI-C® CONTROLLER

The safe PROFIsafe communication is routed via the MOVI-C® CONTROLLERs to the devices with an integrated safety option.

MOVI-C® CONTROLLERs support a different number of devices:

MOVI-C® CONTROLLER	Number of safety options	Comment
UHX25-N FHX25-N	8	
UHX45-N FHX45-N	8	

33955948/EN – 05/2026

MOVI-C® CONTROLLER	Number of safety options	Comment
UHX65-R	24	Maximum of 24 safety options or maximum of 432 bytes of safe process data (sum of all safe process data of the safety options)
UHX85-R	8	• Firmware V2.0 release 201703xxxx (March 2017) and earlier. • Object in the hardware catalog of the TIA portal: UHX84-R/UHX85-R V2.0
UHX85-R	24	Maximum of 24 safety options or maximum of 432 bytes of safe process data (sum of all safe process data of the safety options). • Firmware V2.x or V3.0 release 201707xxxx (July 2017) and later. • Object in the hardware catalog of the TIA portal: UHX84-R/UHX85-R V3.0 and later.
UHX86A-R	24	Maximum of 24 safety options or maximum of 432 bytes of safe process data (sum of all safe process data of the safety options).

The following number of bytes must be taken into consideration when routing:

- CSB: 14 bytes
- CSL, CSS in the "Technology" profile variant: 18 bytes
- CSL, CSS in the "System" profile variant: 22 bytes

F-periphery access of the safety option in the TIA Portal

PROFIsafe version 2.4

For safe communication, CSB..A safety options need a total of 8 bytes for input data and 7 bytes for output data for the PROFIsafe telegram part and occupy them in the process image. Of these, 4 bytes of input data and 3 bytes of output data are the actual safe I/O data (F-user data). The module with the designation F-I/O-module (4/3 bytes) is required for data exchange via PROFIsafe with the CSB..A safety options.

For safe communication with the "Technology" profile variant, the CSL..A/CSS..A safety option needs a total of 10 bytes for input data and 9 bytes for output data for the PROFIsafe telegram part and occupies them in the process image. Of these, 6 bytes of input data and 5 bytes of output data are the actual safe I/O data (F-user data). The module with the designation F-I/O module (6/5 bytes) is required for data exchange via PROFIsafe with the CSL safety option.

For safe communication with the "System" profile variant, the CSL..A/CSS..A safety option needs a total of 16 bytes for input data and 9 bytes for output data for the PROFIsafe telegram part and occupies them in the process image. Of these, 12 bytes of input data and 5 bytes of output data are the actual safe I/O data (F-user data). The module with the designation F-I/O module (12/5 bytes) is required for data exchange via PROFIsafe with the CSL safety option.

The remaining 4 bytes are required for the telegram backup according to the PROFIsafe specification.

33955948/EN – 05/2026

PROFIsafe version 2.6

For safe communication, the CSB..A safety options need a total of 9 bytes of input data and 8 bytes of output data for the PROFIsafe telegram part and occupy these in the process image. Of these, 4 bytes of input data and 3 bytes of output data are the actual safe I/O data (F-user data). The module with the designation F-I/O module (4/3 bytes) V2.6 is required for data exchange via PROFIsafe with the CSB..A safety options.

For safe communication with the "Technology" profile variant, the CSL..A/CSS..A safety option needs a total of 11 bytes for input data and 10 bytes for output data for the PROFIsafe telegram part and occupies them in the process image. Of these, 6 bytes of input data and 5 bytes of output data are the actual safe I/O data (F-user data). The module with the designation F-I/O module (6/5 bytes) 2.6 is required for data exchange via PROFIsafe with the CSL safety option.

For safe communication with the "System" profile variant, the CSL..A/CSS..A safety option needs a total of 17 bytes for input data and 10 bytes for output data for the PROFIsafe telegram part and occupies them in the process image. Of these, 12 bytes of input data and 5 bytes of output data are the actual safe I/O data (F-user data). The module with the designation F-I/O module (12/5 bytes) 2.6 is required for data exchange via PROFIsafe with the CSL safety option.

The remaining 5 bytes are required for the telegram backup according to the PROFIsafe specification.

PROFIsafe address type 1

Uniqueness of the PROFIsafe address is only ensured by the destination address.

- The destination address must be unique in the fieldbus network and the control network. This means the destination address ranges of all F-PLCs must not overlap.
- Destination and source address are included in the CRC value of the safety program of the F-PLC.

PROFIsafe address type 2

Uniqueness of the PROFIsafe address can be ensured by combining the source and destination addresses.

- The destination address must be unique in the control network and must differ from all destination addresses of PROFIsafe address type 1 in the same network.
- The source address used for the F-periphery of an F-PLC must be unique in the network.
- Destination and source address are included in the CRC value of the safety program of the F-PLC.

F-periphery data component of the safety option

While compiling the configuration tool (HW Config), the system automatically generates an F-periphery data component (DB) for each safety option. The F-periphery DB offers users an interface in which they can evaluate or control variables in the safety program.

The symbolic name consists of the invariable prefix "F", the start address of the F-periphery, and the name entered in the object properties during configuration for the F-periphery (e.g.: F00008_198).

33955948/EN – 05/2026

The following table shows the F-periphery DB of the safety option:

	Address	Symbolic name (Variable)	Data type	Function	Presetting
Variables that the user can control.	DBX0.0	"F00008_198" (PASS_ON)	BOOL	1: Activate passivation	0
	DBX0.1	"F00008_198" (ACK_NEC)	BOOL	1: Acknowledgment required for reintegration of the safety option	1
	DBX0.2	"F00008_198" (ACK_REI)	BOOL	1: Acknowledgment for reintegration	0
	DBX0.3	"F00008_198" (IPAR_EN)	BOOL	Variable for re-parameterization (not supported by the safety option)	0
Variables that the user can read.	DBX2.0	"F00008_198" (PASS-OUT)	BOOL	Carry out passivation	1
	DBX2.1	"F00008_198" (QBAD)	BOOL	1: Substitute values are output	1
	DBX2.2	"F00008_198" (ACK_REQ)	BOOL	1: Acknowledgment requirement for reintegration	0
	DBX2.3	"F00008_198" (IPAR_OK)	BOOL	Variable for re-parameterization (not supported by the safety option)	0
	DBB3	"F00008_198" (DIAG)	BYTE	Service information	–

PASS_ON

With the *PASS_ON* variable, you can activate passivation of the safety option. Passivation of the F-periphery takes place for as long as *PASS_ON = 1*.

ACK_NEC

After resolving a fault, the safety option is reintegrated depending on the setting of the variable *ACK_NEC*.

- *ACK_NEC = 0:* Automatic reintegration takes place.
- *ACK_NEC = 1:* Automatic reintegration following acknowledgment by the user.

33955948/EN – 05/2026



⚠ WARNING

Impermissible parameterization of the variable *ACK_NEC = 0*.

Death or severe injuries

- Parameterization of the *ACK_NEC = 0* variable is then only allowed if automatic reintegration of the relevant process is permissible from a technical safety point of view.
- Check if automatic reintegration is permitted for the respective process.

ACK_REI — In order to reintegrate the safety option after the fault has been corrected, user acknowledgment with positive edge at the variable *ACK_REI* is required. Acknowledgment is not possible until variable *ACK_REQ = 1*.

ACK_REQ — The F control system sets *ACK_REQ = 1* after all faults in the data exchange with the safety option have been corrected. After successful acknowledgment, *ACK_REQ* is set to 0 by the F-control system.

PASS_OUT — The variable *PASS_OUT* indicates whether there is a passivation of the safety option. Substitute values are output.

QBAD — Fault in the data exchange with the safety option. Indicates that passivation is present. Substitute values are output.

DIAG — Non-failsafe information about faults which have occurred in the F-control system is made available for service purposes via the *DIAG* variable. For further information, refer to the relevant F-control system manual.

Acknowledgment of PROFIsafe data exchange

The PROFIsafe communication must be fault-free for safe data exchange of the safety option via PROFIsafe. As soon as there is an acknowledgment request of the safety option via the *ACK_REQ* bit in the F-periphery data component, the user must trigger an acknowledgment by a rising edge via the *ACK_REI* bit.

As soon as the safe data exchange of the safety option using PROFIsafe is fault-free, faults in the safety option can be acknowledged by a 0 → 1 edge with the "Acknowledgment" bit in the F-process data profile.

6.7.3 Safety over EtherCAT® safety protocol

Data exchange

- For data exchange via Safety over EtherCAT® between the CS..A safety option and a higher-level controller, the safety option in the "Technology" profile variant has the following process data assignment:
  - 6 bytes of input data
  - 1 byte of header data
  - 3 × 2 bytes of user data and 2 bytes of CRC, each in pairs
  - 2 bytes of connection ID
  - 6 bytes of output data
  - 1 byte of header data
  - 3 × 2 bytes of user data and 2 bytes of CRC, each in pairs

33955948/EN – 05/2026

  - 2 bytes of connection ID
- For data exchange via Safety over EtherCAT® between the CSL..A /CSS..A safety option and a higher-level controller, the safety option in the "System" profile variant has the following process data assignment:
  - 12 bytes of input data
  - 1 byte of header data
  - 6 × 2 bytes of user data and 2 bytes of CRC, each in pairs
  - 2 byte connection ID
  - 12 bytes of output data
  - 1 byte of header data
  - 6 × 2 bytes of user data and 2 bytes of CRC, each in pairs
  - 2 byte connection ID

Profile data must be evaluated and made available in "Little Endian" representation in Safety over EtherCAT®.

Integrating safe communication

Each safety option must be created by the user in the safety program. For establishing the operation of the safety function, defined variables are available that can be named differently depending on the Safety over EtherCAT® main device.

Example

The following example illustrates these variables on the basis of group ports from Beckhoff.

	Variable	Function
Group ports for controlling	RUN/STOP	Starts/stops the execution of the Safety over EtherCAT® program.
	Err Ack	Error reset/acknowledgment of safe communication.
	Module Fault	N.N.
Group ports for monitoring	FB Err	Error during execution of a function block.
	Com Err	Communication error.
	Out Err	Output error.
	Other Err	Other error.
	Com Startup	Safe communication is established.
	FB Inactive	N.N.
	FB Run	Execution of function blocks is running.
	In Run	Safety program is running.

The procedure for starting the safety function and for reintegrating a safety device depends on the Safety over EtherCAT® main device and is not shown here.

Safety over EtherCAT® has validity information for its safe process data. This is transferred from main device to sub-device for the process output data and from sub-device to main device for the process input data when the safety protocol is established. If "Invalid" is reported by the main device, all process output data on the sub-device side is zeroed. The sub-device always reports "valid" with the current process input data.

3955948/EN – 05/2026

Requirements for the FSoE parameterization

Requirements for the FSoE address

The Safety over EtherCAT® user must ensure that the F-address is between 1 and 65535 and that it is unique in a communication domain. A communication domain is a logical network within which the safety-related messages are transported. The messages are not permitted to be transported beyond this network. The F addresses are set in the main device and in the sub-device.

Requirements for the connection ID

The Safety over EtherCAT® user must ensure that the connection ID is unique in a communication domain. A communication domain is a logical network within which the safety-related messages are transported. The messages are not permitted to be transported beyond this network. The connection ID is set in the main device.

FSoE watchdog time

The Safety over EtherCAT® connection monitoring time must be set in the main device. The range of values is from 24 ms to 60000 ms.

6.7.4 CIP Safety™ safety protocol

Data exchange

For communication via CIP Safety™, the safety option (target) must be connected to a fail-safe controller (F-originator) via EtherNet/IP™.

CIP Safety™ data exchange with MOVISAFE® CSB..A

The CSB..A safety options have the module designation "Safety Output" and "Safety Input" with the following process data assignment for data exchange between the safety option and a fail-safe controller via CIP Safety™:

- "Technology" profile variant
  - 16 bytes input data

    The first 4 bytes contain the user data from the FS protocol profile; the remaining bytes are required for the safety IO connection.
  - 14 bytes output data

    The first 3 bytes contain the user data from the FS protocol profile; the remaining bytes are required for the safety IO connection.

CIP Safety™ data exchange with MOVISAFE® CSL..A/CSS..A

The CSL..A/CSS..A safety option has the module designation "Safety Output" and "Safety Input" with the following process data assignment for data exchange between the safety option and a higher-level controller via CIP Safety™:

- "Technology" profile variant
  - 20 bytes input data

    The first 6 bytes contain the useful data from the FS protocol profile, and the remaining bytes are required for the safety IO connection.
  - 18 bytes input data

33955948/EN – 05/2026

The first 5 bytes contain the useful data from the FS protocol profile, and the remaining bytes are required for the safety IO connection.

- "System" profile variant
  - 32 bytes input data

    The first 12 bytes contain the useful data from the FS protocol profile, and the remaining bytes are required for the safety IO connection.
  - 18 bytes input data

    The first 5 bytes contain the useful data from the FS protocol profile, and the remaining bytes are required for the safety IO connection.

Profile data must be evaluated and provided in CIP Safety™ in "Little Endian" notation.

Startup on the CIP Safety™ safety protocol

The safety option supports 2 types of startup in a CIP Safety™ network. The selection is made via the *Address assignment mode* parameter with the two parameter settings "Via CIP Safety™ originator" and "Via parameterization". In the delivery state, the *Address assignment mode* parameter is set to "Via CIP Safety™ originator". The startup can thereby be performed via the engineering tool of the fail-safe controller.

After startup, the user must make sure that the fail-safe controller and the safety option are correctly configured. The user must perform user tests to verify whether the configuration data was properly downloaded. All address parameters are configured by a fail-safe controller or its engineering tool using CIP mechanisms.

Activating the CIP Safety™ safety protocol

In the delivery state, no safety protocol is activated in the safety option. This is the prerequisite so that the CIP Safety™ safety protocol is activated in the safety option via the EtherNet/IP™ interface. The changeover takes place in the parameter object with class code 0x0F of the EtherNet/IP™ interface and the instance 4. To that end, the user must write the value "1" to attribute 1 in the data object via the CIP service *Set_Attribute_Single*. In the safety option, the changeover to CIP Safety™ is carried out internally and is saved to non-volatile memory. Using the CIP service *Get_Attribute_Single*, you can read whether the CIP Safety™ function is activated or deactivated from the EtherNet/IP™ interface connection.

All address parameters are configured by a fail-safe controller or its engineering tool using CIP mechanisms. The administrative rights for the CIP Safety™ target can be reset only via safety reset type 2.

Addressing CIP Safety™

CIP Safety™ requires that an EtherNet/IP™ device must possess a unique network node number (TUNID, Target Unique Network Identifier). The TUNID is composed of the inverter's IP address and the safety network number (SNN) and is created in the engineering tool of the fail-safe controller. The safety option retains its TUNID after the assignment. The TUNID is written to the safety key in non-volatile memory.

Safety Network Number (SNN)

The Safety Network Number (SNN) uniquely identifies a network in all networks in the safety system. The SNN is responsible for assigning a unique number to each safety network or safety subnetwork in a system. The SNN constitutes part of the unique network node ID (unique network identifier, UNID).

33955948/EN – 05/2026

The Safety Network Number (SNN) of the safety option must match the Safety Network Number of the assigned, fail-safe controller.

The safety option maintains its SNN after assignment. The SNN must first be reset before it can be reused with a different value.

SNN formats

The SNN is a hexadecimal number consisting of six bytes, and it can be configured in 2 formats:

- Time-based

  If the time-based format is selected, the SNN contains localized date and time information.

- Manual

  If the manual format is selected, the SNN contains a network type and must have a decimal value from 1 to 9999.

The following requirement must be fulfilled for this purpose:

- The inverter is already integrated in the EtherNet/IP™ network in the engineering tool of the fail-safe controller.

Target Unit Network Identifier (TUNID)

CIP Safety™ requires that an EtherNet/IP™ device must possess a unique network node number (Target Unique Network Identifier, TUNID). The TUNID consists of the IP address of the inverter and the Safety Network Number (SNN).

The safety option retains its TUNID after the assignment. The TUNID is written to the safety key in non-volatile memory.

Assignment via MOVISUITE® Assist CS..

To assign the TUNID, the SNN must be read from the engineering tool of the fail-safe controller and added to MOVISUITE® Assist CS.. Furthermore, the target network ID (the device's IP address) must match the IP address of the EtherNet/IP™ interface connection and the configuration on the engineering tool of the fail-safe controller. To that end, the IP address of the EtherNet/IP™ interface connection must be read in MOVISUITE® and added to MOVISUITE® Assist CS..

The following requirements must all be fulfilled for this purpose:

- In Assist CS.., the CIP Safety™ protocol type must be selected in the F-communication menu, and the *Address assignment mode* parameter must be set to "Via parameterization".
- The inverter is already integrated in the EtherNet/IP™ network in the engineering tool of the fail-safe controller.
- The IP address and the SNN of the inverter are configured in the engineering tool of the fail-safe controller.
- The inverter is configured with the IP address.

Assigning the TUNID on the engineering tool of the fail-safe controller

The TUNID must be assigned to the "Safety Supervisor" CIP Safety™ object via specific CIP services using service codes *0x56 (Propose_TUNID)* and *0x57 (Apply_TUNID)*.

33955948/EN – 05/2026

The following requirements must all be fulfilled for this purpose:

- The inverter is already integrated in the EtherNet/IP™ network in the engineering tool of the fail-safe controller.
- The IP address and the SNN of the inverter are configured in the engineering tool of the fail-safe controller.
- The inverter is configured with the IP address.
- The TUNID contains the delivery value (default value; all bytes 0xFF)
- The CIP Safety™ object reports the "Waiting for TUNID" state in online mode.

The TUNID must first be reset before it can be reused with another value. This can take place via the CIP Safety™ service "Safety Reset".

Safety Configuration Identifier (SCID)

The Safety Configuration Identifier (SCID) is a combination of the Safety Configuration CRC (SCCRC) and Safety Configuration Time Stamp (SCTS). The SCID serves as a unique identifier of a configuration for the safety option and the fail-safe controller.

The Safety Configuration CRC (SCCRC) is the checksum (CRC) of the application-specific configuration data of the safety option.

The Safety Configuration Time Stamp (SCTS) is the time stamp of the application-specific configuration data of the safety option. The SCTS is transferred in the CIP date and time format as a hex value.

The safety option has a statically defined SCTS with the value 0x02932E004792. This corresponds to the time stamp March 1, 2022/12:00. In the MOVISUITE® engineering tool, the SCTS is recalculated on the basis of the locally set local time of the computer system and displayed via a display parameter.

The SCID displayed in the MOVISUITE® engineering tool must be applied for the connection process if the user intends for the application-specific configuration data to be verified by the safety option when establishing a connection (SafetyOpen Type 2a). To do so, the user must read out the SCCRC and SCTS values from the MOVISUITE® engineering tool and apply them in the engineering tool of the fail-safe controller (recommended application).

If the user initiates the establishing of a connection with an SCID equal to zero, then no check of the SCID will be carried out in the safety option. In this case, the user is personally responsible for ensuring that the fail-safe controller and the safety option are correctly configured (SafetyOpen Type 2b). The mechanism is supported, but it is not recommended for the productive application.

The safety option cannot be configured via a fail-safe controller in the connection process (no SafetyOpen Type 1 is supported).

CIP Safety™ service "Safety Reset"

The safety option can be reset on the Safety Supervisor object using the CIP Safety™ service "Safety Reset". Safety reset type 0 and 2 are supported when doing this.

- Safety reset type 0
  - The EtherNet/IP™ interface will be restarted.
  - The safety option will be restarted.
- Safety reset type 2
  - The EtherNet/IP™ interface will be restarted.
  - The safety option will be restarted.

33955948/EN – 05/2026

– The safety option can reset the CIP Safety™ parameters TUNID, CFUNID, and OCPUNID to their default values. To that end, the existing "Bit Map" attribute in the service (Bit 2: TUNID, Bit 4: CFUNID, Bit 5: OCPUNID) is additionally evaluated.

The *AlarmEnable* and *WarningEnable* parameters are always reset to their default value.

The following prerequisites must be fulfilled:

- In the "F-communication" menu in Assist CS.., the "CIP Safety™" protocol type must be selected and the address assignment mode must be set to "Via CIP Safety™ Originator".
- There must be a valid parameterization.
- The CIP communication connection must be blocked (inhibit).

6.7.5 F-process data profile

CSB profile variant "Technology"

Process output data

Byte	Bit	Name	Value	Description
0	0	STO	0	Activate STO.
			1	Deactivate STO.
	1	Reserve		
	2	Reserve		
	3	Reserve		
	4	Reserve		
	5	Reserve		
	6	Unlatch F-DI	0	No acknowledgment.
			1	Acknowledgment of latched F-DI (0 → 1 edge).
	7	Fault acknowledgment	0	No acknowledgment.
			1	Fault acknowledgment (0 → 1 edge).
1	0	Reserve		
	1	Reserve		
	2	Reserve		
	3	Reserve		
	4	Reserve		
	5	Reserve		
	6	Reserve		
	7	Reserve		

33955948/EN – 05/2026

Byte	Bit	Name	Value	Description
2	0	Reserve		
	1	Reserve		
	2	SSX1	0	Activate SSx1.
			1	Deactivate SSx1.
	3	SSX2	0	Activate SSx2.
			1	Deactivate SSx2.
	4	Reserve		
	5	Reserve		
	6	Reserve		
	7	Reserve		

Process input data

Byte	Bit	Name	Value	Description
0	0	STO	0	STO is not active. Safe disconnection of the drive is not active.
			1	STO signals "STO active" status. All outputs parameterized to STO are disabled.
	1	Reserve		
	2	Reserve		
	3	Input data valid	0	At least one of the F-DI process values sends a substitute value.
			1	All process values of the F-DI contain actual values.
	4	Reserve		
	5	Reserve		
	6	Warning	0	The safety option is in fault-free operation.
			1	At least one warning in the safety option is active.
	7	Fault status	0	The safety option is in fault-free operation.
			1	There is at least one fault in the safety option.

33955948/EN – 05/2026

Byte	Bit	Name	Value	Description
1	0	F-DI00	0	F-DI00 process value: "low" or fault.
			1	F-DI00 process value: "high".
	1	F-DI01	0	F-DI01 process value: "low" or fault.
			1	F-DI01 process value: "high".
	2	F-DI02	0	F-DI02 process value: "low" or fault.
			1	F-DI02 process value: "high".
	3	F-DI03	0	F-DI03 process value: "low" or fault.
			1	F-DI03 process value: "high".
	4	Reserve		
	5	Reserve		
	6	Reserve		
	7	Not accepted	0	Device accepted.
			1	Device not accepted.
2	0	Reserve		
	1	Reserve		
	2	SSX1	0	SSx1 not active or limit value violation/fault.
			1	SSx1 is active.
	3	SSX2	0	SSx2 not active or limit value violation/fault.
			1	SSx2 is active.
	4	Reserve		
	5	Reserve		
	6	Reserve		
	7	Reserve		
3	0	Reserve		
	1	Reserve		
	2	Reserve		
	3	Reserve		
	4	Reserve		
	5	Reserve		
	6	Reserve		
	7	Reserve		

33955948/EN – 05/2026

CSL profile variant "Technology"

Process output data

Byte	Bit	Name	Value	Description
0	0	STO	0	Activate STO.
			1	Deactivate STO.
	1	Reserve		
	2	Reserve		
	3	Reserve		
	4	Muting	0	Deactivate encoder fault muting.
			1	Activate encoder fault muting.
	5	Test mode active	0	Deactivate test mode.
			1	Activate test mode.
	6	Unlatch F-DI	0	No acknowledgment.
			1	Acknowledgment of latched F-DI (0 → 1 edge).
	7	Fault acknowledgment	0	No acknowledgment.
			1	Fault acknowledgment (0 → 1 edge).
1	0	F-DO00	0	Disable F-DO00 output (open).
			1	Enable F-DO00 output (close).
	1	Reserve		
	2	Reserve		
	3	Reserve		
	4	Reserve		
	5	Reserve		
	6	Reserve		
	7	Reserve		
2	0	Reserve		
	1	Reserve		
	2	SSX1	0	Activate SSx1.
			1	Deactivate SSx1.
	3	SSX2	0	Activate SSx2.
			1	Deactivate SSx2.
	4	SDI1	0	Activate SDI1.
			1	Deactivate SDI1.
	5	SDI2	0	Activate SDI2.
			1	Deactivate SDI2.
	6	Reserve		
	7	Reserve		

33955948/EN – 05/2026

Byte	Bit	Name	Value	Description
3	0	SLS1	0	Activate SLS1.
			1	Deactivate SLS1.
	1	SLS2	0	Activate SLS2.
			1	Deactivate SLS2.
	2	SLS3	0	Activate SLS3.
			1	Deactivate SLS3.
	3	SLS4	0	Activate SLS4.
			1	Deactivate SLS4.
	4	Reserve		
	5	Reserve		
	6	Reserve		
	7	Reserve		
4	0	Reserve		
	1	Reserve		
	2	Reserve		
	3	Reserve		
	4	Reserve		
	5	Reserve		
	6	Reserve		
	7	Reserve		

33955948/EN – 05/2026

Process input data

Byte	Bit	Name	Value	Description
0	0	STO	0	STO is not active. Safe disconnection is not active.
			1	STO signals "STO active" status. All outputs parameterized to STO are disabled.
	1	Drive safety function diagnostics (ASF)	0	No safety subfunction has detected a limit value violation.
			1	At least one selected safety subfunction has detected a limit value violation or cannot execute limit value monitoring as a consequential fault.
	2	Reserve		
	3	Input data valid	0	At least one of the F-DI process values sends a substitute value.
			1	All process values of the F-DI contain actual values.
	4	Muting	0	The encoder fault muting function is not active, or a fault has occurred.
			1	The encoder fault muting function is active.
	5	Test mode active	0	Test mode of safety subfunctions is not active.
			1	Test mode of safety subfunctions is active.
	6	Warning	0	The safety option is in fault-free operation.
			1	At least one warning in the safety option is active.
	7	Fault status	0	The safety option is in fault-free operation.
			1	There is at least one fault in the safety option.
1	0	F-DI00	0	F-DI00 process value: "low" or fault.
			1	F-DI00 process value: "high".
	1	F-DI01	0	F-DI01 process value: "low" or fault.
			1	F-DI01 process value: "high".
	2	F-DI02	0	F-DI02 process value: "low" or fault.
			1	F-DI02 process value: "high".
	3	F-DI03	0	F-DI03 process value: "low" or fault.
			1	F-DI03 process value: "high".
	4	Reserve		
	5	Reserve		
	6	Reserve		
	7	Not accepted	0	Device accepted.
			1	Device not accepted.

33955948/EN – 05/2026

Byte	Bit	Name	Value	Description
2	0	Reserve		
	1	EDM	0	Fault detected on the output assigned to the EDM function.
			1	No fault detected.
	2	SSx1	0	SSx1 not active or limit value violation/fault.
			1	SSx1 is active.
	3	SSx2	0	SSx2 not active or limit value violation/fault.
			1	SSx2 is active.
	4	SDI1	0	SDI1 not active or limit value violation/fault.
			1	SDI1 is active.
	5	SDI2	0	SDI2 not active or limit value violation/fault.
			1	SDI2 is active.
	6	Reserve		
	7	Reserve		
3	0	SLS1	0	SLS1 not active or limit value violation/fault.
			1	SLS1 is active.
	1	SLS2	0	SLS2 not active or limit value violation/fault.
			1	SLS2 is active.
	2	SLS3	0	SLS3 not active or limit value violation/fault.
			1	SLS3 is active.
	3	SLS4	0	SLS4 not active or limit value violation/fault.
			1	SLS4 is active.
	4	Reserve		
	5	Reserve		
	6	Reserve		
	7	Reserve		

33955948/EN – 05/2026

Byte	Bit	Name	Value	Description
4	0	Reserve		
	1	Reserve		
	2	SSM1	0	SSM1 not active or limit value violation/fault.
			1	SSM1 is active.
	3	SSM2	0	SSM2 not active or limit value violation/fault.
			1	SSM2 is active.
	4	SSM3	0	SSM3 not active or limit value violation/fault.
			1	SSM3 is active.
	5	SSM4	0	SSM4 not active or limit value violation/fault.
			1	SSM4 is active.
	6	Reserve		
	7	Reserve		
5	0	Reserve		
	1	Reserve		
	2	Reserve		
	3	Reserve		
	4	Reserve		
	5	Reserve		
	6	Reserve		
	7	Qualifier actual value process 2	0	Process value 2 is not valid or not in use.
			1	Process value 2 is valid.

CSL profile variant "System"

With the "System" profile variant, a 32-bit value is transmitted in addition to the bits described in the "Technology" profile variant. The EI7C FS built-in encoder is required to use the process data.

Process value 2 (32 bits)

- Speed in user units
- Rotational speed in system units

The speed and rotational speed values are processed as 32-bit values.

The speed value also includes the parameterized decimal places. Example of a speed with 2 decimal places: v = 1234.56 mm/s. The internal numerical value is 123456. This means that there is a "1" in the high word and "57920" in the low word.

The rotational speed value is indicated in system units. The numerical value is shown in 1E 4 min-1.

The validity for the set process values ("Process value 1" and "Process value 2") is signaled via the "Actual process value 1 qualifier" or "Actual process value 2 qualifier" bits.

The "Qualifier" bit is always "0" if an "Actual process value" is set to "Not used".

33955948/EN – 05/2026

CSS profile variant "Technology"

Process output data

Byte	Bit	Name	Value	Description
0	0	STO	0	Activate STO.
			1	Deactivate STO.
	1	SLI increment enable	0	Increment motion inhibited.
			1	Enable of an increment. In the case of edge 0 → 1, the current position value is saved as a reference value.
	2	Reserve		
	3	Reserve		
	4	Muting	0	Deactivate encoder fault muting.
			1	Activate encoder fault muting.
	5	Test mode active	0	Deactivate test mode.
			1	Activate test mode.
	6	Unlatch F-DI	0	No acknowledgment.
			1	Acknowledgment of latched F-DI (0 → 1 edge).
	7	Fault acknowledgment	0	No acknowledgment.
			1	Fault acknowledgment (0 → 1 edge).
1	0	F-DO00	0	Disable F-DO00 output (open).
			1	Enable F-DO00 output (close).
	1	Reserve		
	2	Reserve		
	3	Reserve		
	4	Reserve		
	5	Reserve		
	6	Reserve		
	7	Reserve		

33955948/EN – 05/2026

Byte	Bit	Name	Value	Description
2	0	SOS	0	Activate SOS.
			1	Deactivate SOS.
	1	Reserve		
	2	SSx1	0	Activate SSx1.
			1	Deactivate SSx1.
	3	SSx2	0	Activate SSx2.
			1	Deactivate SSx2.
	4	SDI1	0	Activate SDI1.
			1	Deactivate SDI1.
	5	SDI2	0	Activate SDI2.
			1	Deactivate SDI2.
	6	SLI1	0	Activate SLI1.
			1	Deactivate SLI1.
	7	SLI2	0	Activate SLI2.
			1	Deactivate SLI2.
3	0	SLS1	0	Activate SLS1.
			1	Deactivate SLS1.
	1	SLS2	0	Activate SLS2.
			1	Deactivate SLS2.
	2	SLS3	0	Activate SLS3.
			1	Deactivate SLS3.
	3	SLS4	0	Activate SLS4.
			1	Deactivate SLS4.
	4	SSR1	0	Activate SSR1.
			1	Deactivate SSR1.
	5	SSR2	0	Activate SSR2.
			1	Deactivate SSR2.
	6	Reserve		
	7	Reserve		

33955948/EN – 05/2026

Byte	Bit	Name	Value	Description
4	0	SLA1	0	Activate SLA1.
			1	Deactivate SLA1.
	1	SLA2	0	Activate SLA2.
			1	Deactivate SLA2.
	2	Reserve		
	3	Reserve		
	4	Reserve		
	5	Reserve		
	6	Reserve		
	7	Reserve		

Process input data

Byte	Bit	Name	Value	Description
0	0	STO	0	STO is not active. Safe disconnection is not active.
			1	STO signals "STO active" status. All outputs parameterized to STO are disabled.
	1	Drive safety functions diagnostics	0	No safety subfunction has detected a limit value violation.
			1	At least one selected safety subfunction has detected a limit value violation or cannot execute limit value monitoring as a consequential fault.
	2	Reserve		
	3	Input data valid	0	At least one of the F-DI process values sends a substitute value.
			1	All process values of the F-DI contain actual values.
	4	Muting	0	The encoder fault muting function is not active, or a fault has occurred.
			1	The encoder fault muting function is active.
	5	Test mode active	0	Test mode of safety subfunctions is not active.
			1	Test mode of safety subfunctions is active.
	6	Warning	0	The safety option is in fault-free operation.
			1	At least one warning in the safety option is active.
	7	Fault status	0	The safety option is in fault-free operation.
			1	There is at least one fault in the safety option.

33955948/EN – 05/2026

Byte	Bit	Name	Value	Description
1	0	F-DI00	0	F-DI00 process value: "low" or fault.
			1	F-DI00 process value: "high".
	1	F-DI01	0	F-DI01 process value: "low" or fault.
			1	F-DI01 process value: "high".
	2	F-DI02	0	F-DI02 process value: "low" or fault.
			1	F-DI02 process value: "high".
	3	F-DI03	0	F-DI03 process value: "low" or fault.
			1	F-DI03 process value: "high".
	4	Reserve		
	5	Reserve		
	6	Reserve		
	7	Not accepted	0	Device accepted.
			1	Device not accepted.
2	0	SOS	0	SOS not active or limit value violation/fault.
			1	SOS is active.
	1	EDM	0	Fault detected on at least one of the outputs assigned to the EDM function.
			1	No fault detected.
	2	SSx1	0	SSx1 not active or limit value violation/fault.
			1	SSx1 is active.
	3	SSx2	0	SSx2 not active or limit value violation/fault.
			1	SSx2 is active.
	4	SDI1	0	SDI1 not active or limit value violation/fault.
			1	SDI1 is active.
	5	SDI2	0	SDI2 not active or limit value violation/fault.
			1	SDI2 is active.
	6	SLI1	0	SLI1 not active or limit value violation/fault.
			1	SLI1 is active.
	7	SLI2	0	SLI2 not active or limit value violation/fault.
			1	SLI2 is active.

33955948/EN – 05/2026

Byte	Bit	Name	Value	Description
3	0	SLS1	0	SLS1 not active or limit value violation/fault.
			1	SLS1 is active.
	1	SLS2	0	SLS2 not active or limit value violation/fault.
			1	SLS2 is active.
	2	SLS3	0	SLS3 not active or limit value violation/fault.
			1	SLS3 is active.
	3	SLS4	0	SLS4 not active or limit value violation/fault.
			1	SLS4 is active.
	4	SSR1	0	SSR1 not active or limit value violation/fault.
			1	SSR1 is active.
	5	SSR2	0	SSR2 not active or limit value violation/fault.
			1	SSR2 is active.
	6	Reserve		
	7	Reserve		
4	0	SLA1	0	SLA1 not active or limit value violation/fault.
			1	SLA1 is active.
	1	SLA2	0	SLA2 not active or limit value violation/fault.
			1	SLA2 is active.
	2	SSM1	0	SSM1 not active or limit value violation/fault.
			1	SSM1 is active.
	3	SSM2	0	SSM2 not active or limit value violation/fault.
			1	SSM2 is active.
	4	SSM3	0	SSM3 not active or limit value violation/fault.
			1	SSM3 is active.
	5	SSM4	0	SSM4 not active or limit value violation/fault.
			1	SSM4 is active.
	6	Reserve		
	7	Reserve		

33955948/EN – 05/2026

Byte	Bit	Name	Value	Description
5	0	Reserve		
	1	Reserve		
	2	Reserve		
	3	Reserve		
	4	Reserve		
	5	Reserve		
	6	Qualifier actual value process 1	0	Process value 1 is not valid or not in use
			1	Process value 1 is valid
	7	Qualifier actual value process 2	0	Process value 2 is not valid or not in use
			1	Process value 2 is valid

CSS profile variant "System"

With the "System" profile variant, a 32-bit value is transmitted in addition to the bits described in the "Technology" profile variant. A safety encoder is necessary to be able to use the process data.

Process value 2 (32 bits)

- Speed in user units
- Rotational speed in system units

The speed and rotational speed values are processed as 32-bit values.

The speed value also includes the parameterized decimal places. Example of a speed with 2 decimal places: v = 1234.56 mm/s. The internal numerical value is 123456. This means that there is a "1" in the high word and "57920" in the low word.

The rotational speed value is indicated in system units. The numerical value is shown in 1E 4 min-1.

The validity for the set process values ("Process value 1" and "Process value 2") is signaled via the "Actual process value 1 qualifier" or "Actual process value 2 qualifier" bits.

The "Qualifier" bit is always "0" if an "Actual process value" is set to "Not used".

6.7.6 Process input data (F-PI) substitute values

For all process data (F-PI) outgoing from the safety option, the value "0" is written as the substitute value. One exception is *Fault state*. For *Fault state*, the value "1" is written as the substitute value in the case of a fault-free protocol. In the case of a faulty F-protocol, the value "0" is written for *Fault state*.

6.7.7 Edge evaluation of F-DI process data

Observe the following points for edge evaluation of F-DI process data in the higher-level controller for safety-relevant functions:

- Only the 0 → 1 edge may be used. The 1 → 0 edge must not be used as it can occur at any time during the transition to the safe state, e.g. in the event of a detected fault or a line interruption.

33955948/EN – 05/2026

- The higher-level controller may only evaluate the edge if the process data bit changes from 0 to 1 and the "Qualifier process data" is set to "OK" (logical 1) for both the value "0" of the process data bit and the value "1" of the process data bit. If it is set to "Fault" (logical 0), the edge must be ignored.
- It is ensured that all edges evaluated in the higher-level controller were actually present at the F-DI input terminal.
- What cannot be ensured is that all edges occurring at the F-DI input terminal are detected by the higher-level controller. This must be particularly observed in the event of a defect in the safety option or the cabling.

6.7.8 Response when canceling safe communication

If the "Safe communication fault response" is not activated during a failure of the safe process data communication, all process data bits will be overwritten and processed with the substitute value "0". This means that all enabled safety subfunctions (including the STO safety subfunction) will be activated. This can lead to an abrupt stop of the system.

With activated "Safe communication fault response", the "SS1" fault response can be set and the corresponding SSx instance can be selected.

Before first establishment of the safe process data communication, all process data bits are set to the substitute value "0". After the safe process data communication is established and fails again, the process data bit of the set SSx instance will be set to "0". The other process data bits of the STO, SDI, and SLS function will retain the last value. All other process data bits will be set to "0". After the SSx ramp has reached the final state of the STO function, all process data bits will be set to "0".

If "Safe communication fault response" is activated, if communication is interrupted, the response time until the STO safety subfunction is activated will be extended by the times of the parameterized SSx instance.

INFORMATION

If the F-DO function selection is set to "none", the outputs are disabled (logically "0").

If the F-DO function selection is set to "STO" or "SBC", the opening of the outputs is delayed by the activated function after the SSx ramp.

6.8 Response times

6.8.1 Introduction

The response time plays a decisive role in the design and implementation of safety subfunctions for systems and machines. In order to match the response time to the requirements of a safety subfunction, the entire system from the sensor (or command device) to the actuator must always be taken into consideration. The following times are of particular importance in connection with the MOVISAFE® CS..A safety option:

- Response time of the connected sensors
- Safe communication cycle time
- Processing time (cycle time) in the safety controller
- Safe communication monitoring time
- Internal response times of the MOVISAFE® CS..A safety option
- Response time of the actuators (e.g. frequency inverters)

33955948/EN – 05/2026

Establish the response sequence for each safety subfunction in your application and determine the maximum response time for each case, taking the relevant manufacturer's data into consideration. It is particularly important to observe the information in the safety documentation of the used safety controller.

Details of the maximum response time of the MOVISAFE® CS..A safety option can be found in chapter "Technical data". For further information regarding response time analysis for safe communication, refer to the corresponding standard: IEC 61784-3.

6.8.2 Response times of the STO safety subfunction

The following response times are fixed:

	STO response times	
	Typical	**Maximum**
Duration from activation of the STO safety subfunction to the shutdown of the rotating field	7ms	28ms
Duration from deactivation of the STO safety subfunction to the enabling of the rotating field	–	110ms

6.8.3 Calculation of the response times of the CS..A safety options

Fixed response times

The following response times are fixed:

- $T_{_Sys}$ = 4 ms (cycle time of the system)
- $T_{_Task}$ = 0.5 ms (cycle time of a process)
- Maximum fault response time $T_{_FRZ}$ = 9 ms applies to the deactivation of the internal output F-DO_STO and the external safe digital outputs F-DO.. and to setting the fault status of the safe process input data (F-PI).
- The response times of the safety options in relation to the safe digital outputs (F-DO) apply for ohmic loads ≤30 kΩ.

INFORMATION

Ensure that all the values are scaled to a consistent unit basis when setting the parameter values in the formulas.

Encoders

All response times must be multiplied by the factor 1.002.

Encoder error response time (for all encoders)

Calculation factor (formula symbol)	Calculation specification response time
Deactivation F-DO_STO/F-DO00	8 ms
Setting fault status F-PI	12 ms

33955948/EN – 05/2026

EI7C built-in encoder

Calculation factor (formula symbol)	Calculation specification response time
Processing time encoder speed ($T_{_ENC_VEL}$)	3.5 × filter time speed (8708.4) + $1/n_{_Actual}$ + $T_{_Task}$ + $T_{_Sys}$
Processing time encoder positioning ($T_{_ENC_POS}$)	$T_{_Sys}$ + $T_{_Task}$

Safety encoder with MOVILINK® DDI

Calculation factor (formula symbol)	Calculation specification response time
Processing time encoder positioning ($T_{_ENC_POS}$)	T_{ENC_POS} = 9 ms
Processing time encoder speed ($T_{_ENC_VEL}$)	T_{ENC_VEL} = 9 ms + speed filter time (8708.3)
Processing time encoder acceleration ($T_{_ENC_ACC}$)	T_{ENC_ACC} = 9 ms + acceleration filter time (8708.2)

Safe digital input F-DI

All response times must be multiplied by the factor 1.002.

Calculation factor (formula symbol)	Calculation specification response time
Input processing time with F-DI selection ($T_{_InputProcessing_F\text{-}DI}$)	Input filter time (8704.2) + 2 ms + $T_{_Sys}$ + 350 µs
Input processing with F-DI deselection: ($T_{_InputProcessing_F\text{-}DI_Deselection}$)	
• Single-channel	Input filter time (8704.2) + 51 ms + $T_{_Sys}$ + 350 µs
• Dual-channel	Input filter time (8704.2) + 2 ms + $T_{_Sys}$ + 350 µs
Response time of line diagnostics	30 ms (the response times of the safety subfunctions are not taken into consideration)

Safe communication

The response times for the safe communication always relate to the safe protocol and not to the external interface of the safety option. All response times must be multiplied by the factor 1.002.

Calculation factor (formula symbol)	Calculation specification response time
Input processing time via safe process output data ($T_{_InputProcessing_F\text{-}PO}$)	2 × $T_{_Task}$ + $T_{_Sys}$
Response time selection (F-DIx after F-PI)	$T_{_InputProcessing_F\text{-}DIx}$ + T_{Sys}
Response time (F-PO after F-DOx)	$T_{_InputProcessing_F\text{-}PO}$ + T_{Sys}
Response time (safe velocity (SV) after F-PI)	$T_{_ENC_VEL}$ + T_{Sys}

Calculation factor (formula symbol)	Calculation specification response time
F-ConnectionLoss response time:	
• SS1-t response	$T_{_Sys}$ + SSx-t delay t_1 (8706.8) + Brake application time [1] (8706.15) + 1 ms
• SS1-r response	$T_{_Sys}$ + SSx-r monitoring delay t_1 (8706.9) + Brake application time[1] (8706.15) + Actual_speed (8700.79)/SSx-r delay a (8706.10) + SSx-r jerk time t_3[2](8706.11) + 1 ms

1) If SBC enable (8706.14) = no, then the brake application time = 0
2) If ramp monitoring = linear, then the jerk time = 0

Selection of a safety subfunction via a safe digital input

All response times must be multiplied by the factor 1.002.

Calculation factor	Calculation specification response time
STO	$T_{_InputProcessing_F\text{-}DI}$ + $T_{_Sys}$ + brake application time[1] (8706.15) + 1 ms
SOS	$T_{_InputProcessing_F\text{-}DI}$ + $T_{_Sys}$
SS1-r	$T_{_InputProcessing_F\text{-}DI}$ + $T_{_Sys}$ + SSx-r monitoring delay t_2 (8706.9) + Brake application time[1] (8706.15) + Actual_speed/SSx-r delay a (8706.10) + SSx-r jerk time[2] t_3 (8706.11) + 1 ms
SS1-t	$T_{_InputProcessing_F\text{-}DI}$ + $T_{_Sys}$ + SSx-t delay t_1 (8706.8) + Brake application time [1] (8706.15) + 1 ms
SS2-t	$T_{_InputProcessing_F\text{-}DI}$ + $T_{_Sys}$ + SSx-t delay t_1 (8706.8)
SLS	$T_{_InputProcessing_F\text{-}PO}$ + $T_{_Sys}$ + SSx-r monitoring delay t_2 (8706.23) + $v_{_Start}$/SSx-r deceleration a (8706.27) + SSx-r jerk time t_3[2] (8706.28) • SLS ramp start at actual speed = 0 $v_{_Start}$ = maximum speed[3] - limit speed (8706.24) • SLS ramp start at actual speed = 1 and ramp monitoring = linear $v_{_Start}$ = actual speed - limit speed (8706.24) • SLS ramp start at actual speed = 1 and ramp monitoring = jerk-limited $v_{_Start}$ = actual speed + SLS speed offset v (8706.36) - limit speed (8706.24)
SSR	$T_{_InputProcessing_F\text{-}DI}$ + $T_{_Sys}$ + monitoring delay t_2 (8706.53)
SDI	$T_{_InputProcessing_F\text{-}DI}$ + $T_{_Sys}$
SLI	$T_{_InputProcessing_F\text{-}DI}$ + $T_{_Sys}$

1) If SBC enable (8706.14) = no, then the brake application time = 0
2) If ramp monitoring = linear, then the jerk time = 0
3) Maximum speed (8707.1) or other SLS limit speed in the same effective direction

33955948/EN – 05/2026

Selection of a safety subfunction via safe communication

The response times for the safe communication always relate to the safe protocol and not to the external interface of the safety option. All response times must be multiplied by the factor 1.002.

Calculation factor	Calculation specification response time
STO	$T_{_InputProcessing_F\text{-}PA}$ + 2 × $T_{_Sys}$ + 1 ms + brake application time[1] (8706.15)
SOS	$T_{_InputProcessing_F\text{-}DI}$ + $T_{_Sys}$
SS1-r	$T_{_InputProcessing_F\text{-}PA}$ + 2 × $T_{_Sys}$ + SSx-r monitoring delay t_2 (8706.9) + Brake application time[1] (8706.15) + Actual_speed (8700.79)/SSx-r delay a (8706.10) + SSx-r jerk time[2] t_3 (8706.11) + 1 ms
SS1-t	$T_{_InputProcessing_F\text{-}PA}$ + 2 × $T_{_Sys}$ + SSx-t delay t_1 (8706.8) + Brake application time [1] (8706.15) + 1 ms
SS2-t	$T_{_InputProcessing_F\text{-}DI}$ + $T_{_Sys}$ + SSx-t delay t_1 (8706.8)
SLS	$T_{_InputProcessing_F\text{-}PO}$ + $T_{_Sys}$ + SSx-r monitoring delay t_2 (8706.23) + $v_{_Start}$/SSx-r deceleration a (8706.27) + SSx-r jerk time t_3[2] (8706.28) • SLS ramp start at actual speed = 0 $v_{_Start}$ = maximum speed[3] - limit speed (8706.24) • SLS ramp start at actual speed = 1 and ramp monitoring = linear $v_{_Start}$ = actual speed - limit speed (8706.24) • SLS ramp start at actual speed = 1 and ramp monitoring = jerk-limited $v_{_Start}$ = actual speed + SLS speed offset v (8706.36) - limit speed (8706.24)
SDI	$T_{_InputProcessing_F\text{-}PO}$ + $T_{_Sys}$
SSR	$T_{_InputProcessing_F\text{-}DI}$ + $T_{_Sys}$ + monitoring delay t_2 (8706.53)
SLI	$T_{_InputProcessing_F\text{-}DI}$ + $T_{_Sys}$

1) If SBC enable (8706.14) = no, then the brake application time = 0
2) If ramp monitoring = linear, then the jerk time = 0
3) Maximum speed (8707.1) or other SLS limit speed in the same effective direction

Response time in case of limit value violation with active fault response

The response time describes the time from detection of the limit value violation to activation of the safe state (STO). All response times must be multiplied by the factor 1.002.

Calculation factor	Calculation specification response time
SOS	$T_{_ENC_POS_Combined}$ + $T_{_Sys}$
SSx-r	$T_{_ENC_VEL}$ + $T_{_Sys}$ + 1 ms
SLS with parameterized fault response: • STO • SS1-t	 $T_{_ENC_VEL}$ + $T_{_Sys}$ + 1 ms $T_{_ENC_VEL}$ + $T_{_Sys}$ + SSx-t delay t_1 (8706.8) + Brake application time [1](8706.15) + 1 ms

Calculation factor	Calculation specification response time
• SS2-t	$T_{_ENC_VEL} + T_{_Sys}$ + SSx-t delay t_1 (8706.8)
• SS1-r	$T_{_ENC_VEL} + T_{_Sys}$ + SSx-r monitoring delay t_2 (8706.9) + Brake application time[1] (8706.15) + Actual_speed (8700.79)/SSx-r delay a (8706.10) + SSx-r jerk time[2] t_3 (8706.11) + 1 ms
• SS2-r	$T_{_ENC_VEL} + T_{_Sys}$ + SSx-r delay t_2 (8706.9) + Actual_speed (8700.79)/SSx-r delay a (8706.10) + SSx-r jerk time t_3[2] (8706.11)
SSR with parameterized fault response:	
• STO	$T_{_ENC_VEL} + T_{_Sys}$
• SS1-t	$T_{_ENC_VEL} + T_{_Sys}$ + SSx-t delay t_1 (8706.8) + Brake application time[1](8706.15)
• SS2-t	$T_{_ENC_VEL} + T_{_Sys}$ + SSx-t delay t_1 (8706.8)
• SS1-r	$T_{_ENC_VEL} + T_{_Sys}$ + SSx-r monitoring delay t_2 (8706.9) + Brake application time[1] (8706.15) + Actual_speed (8700.79)/SSx-r delay a (8706.10) + SSx-r jerk time t_3[2] (8706.11)
• SS2-r	$T_{_ENC_VEL} + T_{_Sys}$ + SSx-r delay t_2 (8706.9) + Actual_speed (8700.79)/SSx-r delay a (8706.10) + SSx-r jerk time t_3[2] (8706.11)
SDI	$T_{_ENC_POS} + T_{_Sys}$ + 1 ms
SLI	$T_{_ENC_VEL} + T_{_Sys}$ For systems in which an encoder is responsible for the position and a 2nd encoder is responsible for the speed, the following applies: $T_{_ENC_VEL_Combined} + T_{ENC_POS_Combined} + T_{_Sys}$

1) If SBC enable (8706.14) = no, then the brake application time = 0

2) If ramp monitoring = linear, then the jerk time = 0

Response time when reporting the limit value violation via safe communication

The response times for the safe communication always relate to the safe protocol and not to the external interface of the safety option. All response times must be multiplied by the factor 1.002.

Calculation factor	Calculation specification response time
SOS	$T_{_ENC_POS} + 2 \times T_{_Sys}$
SSx-r	$T_{_ENC_VEL} + 2 \times T_{_Sys}$
SLS with parameterized fault response:	
• STO	$T_{_ENC_VEL} + 2 \times T_{_Sys}$
• SS1-t	$T_{_ENC_VEL} + 2 \times T_{_Sys}$ + SSx-t delay t_1 (8706.8) + Brake application time[1](8706.15)
• SS2-t	$T_{_ENC_VEL} + T_{_Sys}$ + SSx-t delay t_1 (8706.8)
• SS1-r	$T_{_ENC_VEL} + 2 \times T_{_Sys}$ + SSx-r monitoring delay t_2 (8706.9) + Brake application time[1] (8706.15) + Actual_speed (8700.79)/ SSx-r delay a (8706.10) + SSx-r jerk time t_3 [2](8706.11)

33955948/EN – 05/2026

Calculation factor	Calculation specification response time
• SS2-r	$T_{_ENC_VEL}$ + $T_{_Sys}$ + SSx-r delay t_2 (8706.9) + Actual_speed (8700.79)/SSx-r delay a (8706.10) + SSx-r jerk time t_3[2] (8706.11)
SSM	$T_{_ENC_VEL}$ + $T_{_Sys}$
SSR with parameterized fault response:	
• STO	$T_{_ENC_VEL}$ + 2 × $T_{_Sys}$
• SS1-t	$T_{_ENC_VEL}$ + 2 × $T_{_Sys}$ + SSx-t delay t_1 (8706.8) + Brake application time[1](8706.15)
• SS2-t	$T_{_ENC_VEL}$ + $T_{_Sys}$ + SSx-t delay t_1 (8706.8)
• SS1-r	$T_{_ENC_VEL}$ + 2 × $T_{_Sys}$ + SSx-r monitoring delay t_2 (8706.9) + Brake application time[1] (8706.15) + Actual_speed (8700.79)/ SSx-r delay a (8706.10) + SSx-r jerk time t_3[2] (8706.11)
• SS2-r	$T_{_ENC_VEL}$ + $T_{_Sys}$ + SSx-r delay t_2 (8706.9) + Actual_speed (8700.79)/SSx-r delay a (8706.10) + SSx-r jerk time t_3[2] (8706.11)
• F-PI	$T_{_ENC_VEL}$ + $T_{_Sys}$
SDI	$T_{_ENC_POS}$ + 2 × $T_{_Sys}$
SLI	$T_{_ENC_VEL}$ + 2 × $T_{_Sys}$
SLA with parameterized fault response:	
• STO	$T_{_ENC_ACC}$ + 2 × $T_{_Sys}$
• SS1-t	$T_{_ENC_ACC}$ + 2 × $T_{_Sys}$ + SSx-t delay t_1 (8706.8) + Brake application time[1](8706.15)
• SS2-t	$T_{_ENC_ACC_Combined}$ + $T_{_Sys}$ + SSx-t delay t_1 (8706.8)
• SS1-r	$T_{_ENC_ACC}$ + 2 × $T_{_Sys}$ + SSx-r monitoring delay t_2 (8706.9) + Brake application time[1] (8706.15) + Actual_speed (8700.79)/ SSx-r deceleration a (8706.10) + SSx-r jerk time[2] t_3 (8706.11)
• SS2-r	$T_{_ENC_ACC}$ + $T_{_Sys}$ + SSx-r delay t_2 (8706.9) + Actual_speed (8700.79)/SSx-r delay a (8706.10) + SSx-r jerk time t_3[2] (8706.11)
• F-PI	$T_{_ENC_ACC}$ + $T_{_Sys}$

1) If SBC enable (8706.14) = no, then the brake application time = 0

2) If ramp monitoring = linear, then the jerk time = 0

Deselection of a safety subfunction via safe communication

The response times for the safe communication always relate to the safe protocol and not to the external interface of the safety option. All response times must be multiplied by the factor 1.002.

Calculation factor (formula symbol)	Calculation specification response time
Response time ($T_{_InputProcessing_F\text{-}PO_Deselection}$)	$T_{_InputProcessing_F\text{-}PO}$ + 16 ms

33955948/EN – 05/2026

EDM function response time

All response times must be multiplied by the factor 1.002.

Calculation factor	Calculation specification response time
Shut down affected F-DO	$T_{_InputProcessing_F\text{-}DI_Deselection}$ + Maximum (EDM pick-up delay (8705.32), EDM drop-out delay (8705.33)) + $T_{_Sys}$
Additional STO fault response	$T_{_InputProcessing_F\text{-}DI_Deselection}$ + Maximum (EDM pick-up delay (8705.32), EDM drop-out delay (8705.33)) + $T_{_Sys}$ + Brake application time[1] (8706.15)
Additional fault response STO and STO on F-PI	$T_{_InputProcessing_F\text{-}DI_Deselection}$ + Maximum (EDM pick-up delay (8705.32), EDM drop-out delay (8705.33)) + 2 × $T_{_Sys}$ + Brake application time[1] (8706.15)
Additional fault response SS1-t	$T_{_InputProcessing_F\text{-}DI_Deselection}$ + Maximum (EDM pick-up delay (8705.32), EDM drop-out delay (8705.33)) + $T_{_Sys}$ + SSx-t delay t1 (8706.8) + Brake application time[1] (8706.15)
Additional fault response SS1-t and STO bit on F-PI	$T_{_InputProcessing_F\text{-}DI_Deselection}$ + Maximum (EDM pick-up delay (8705.32), EDM drop-out delay (8705.33)) + 2 × $T_{_Sys}$ + SSx-t delay t1 (8706.8) + Brake application time[1] (8706.15)
Additional fault response SS1-r	$T_{_Inputprocessing_F\text{-}DI_Deselection}$ + Maximum (EDM pick-up delay (8705.32), EDM drop-out delay (8705.33)) + $T_{_Sys}$ + SSx-r monitoring delay t2 (8706.9) + Brake application time[1] (8706.15) + Actual_speed (8700.79)/SSx-r deceleration a (8706.10) + SSx-r jerk time[2] t3 (8706.11)
Additional fault response SS1-r and STO bit on F-PI	$T_{_InputProcessing_F\text{-}ID_Deselection}$ + Maximum (EDM pick-up delay (8705.32), EDM drop-out delay (8705.33)) +2 × $T_{_Sys}$ + SSx-r monitoring delay t2 (8706.9) + Brake application time[1] (8706.15) + Actual_speed (8700.79)/SSx-r deceleration a (8706.10) + SSx-r jerk time t_3[2] (8706.11)
Reporting the EDM fault via F-PI	$T_{_InputProcessing_F\text{-}DI_Deselection}$ + Maximum (EDM pick-up delay (8705.32), EDM drop-out delay (8705.33)) + $T_{_Sys}$

1) If SBC enable (8706.14) = no, then the brake application time = 0

2) If ramp monitoring = linear, then jerk time = 0

33955948/EN – 05/2026

7 Prefabricated cables

7.1 Meaning of the symbols

Symbol	Meaning
	Connection cable: Connector → connector for fixed installation
	Connection cable extension: Connector → connector for fixed installation
	Connection cable: Connector → encoder connection cover for fixed installation
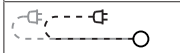	Connection cable: Connector → encoder connection cover for cable carrier installation
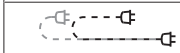	Connection cable: Connector → connector for cable carrier installation
	Connection cable extension: Connector → connector for cable carrier installation
	Connection cable: Connector → open end for fixed installation
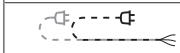	Connection cable: Connector → open end for cable carrier installation

7.2 Power cables

7.2.1 Motor hybrid cables for CMP../CM3C.. motors with/without brake, in encoder-less design

Overview

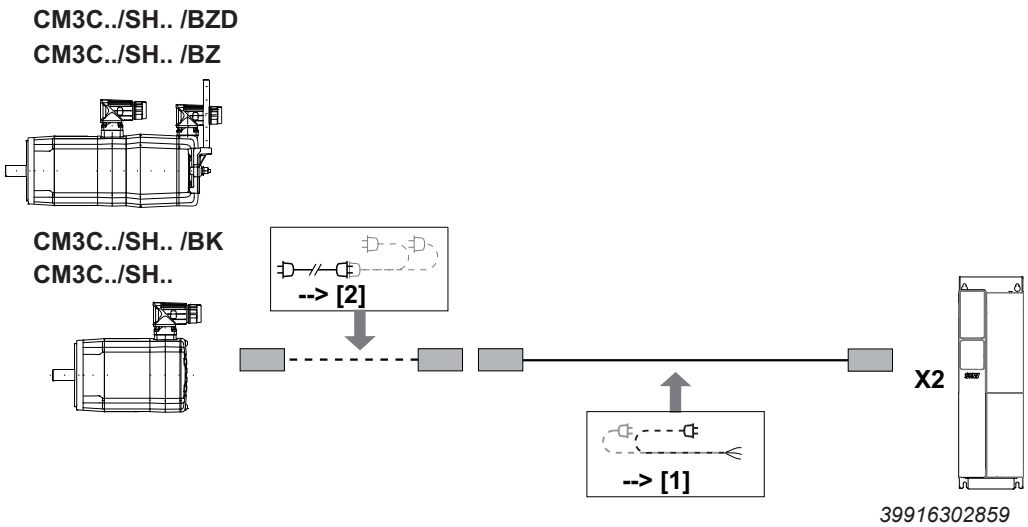

[1] "Motor/brakemotor cable ../SH.. " (→ 🗎 256)
[2] "Motor extension cables ../SH.. " (→ 🗎 257)

Motor/brakemotor cables ../SH..

Design

	Motor side		Inverter side		
				Fixed installation	Cable carrier installation
Cable type	**Connector type/ Size**	**Cable cross section**	**Connector type/ Size**	**Part number**	
Motor cable/ brakemotor cable	SH1 / M23 SpeedTec	4 × 1.5 mm² + 3 × 1 mm² + 4 × 0.34 mm²	Open end	–	18191290
		4 × 2.5 mm² + 3 × 1 mm² + 4 × 0.34 mm²		–	18191304
		4 × 4 mm² + 3 × 1 mm² + 4 × 0.34 mm²		–	18191312
	SHB / M40 SpeedTec	4 × 6 mm² + 3 × 1.5 mm² + 4 × 0.34 mm²		–	18191320
		4 × 10 mm² + 3 × 1.5 mm² + 4 × 0.34 mm²		–	18191339

33955948/EN – 05/2026

Motor extension cables ../SH..

Design

	Motor side	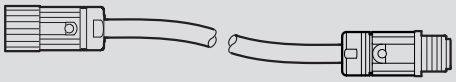 Inverter side		Fixed installation	Cable carrier installation
Cable type	**Connector type/ Size**	**Cable cross section**	**Connector type/ Size**	**Part number**	
Motor extension cable	SH1 / M23 SpeedTec	4 × 1.5 mm² + 3 × 1 mm² + 4 × 0.34 mm²	SH1 / M23 SpeedTec	–	18191347
		4 × 2.5 mm² + 3 × 1 mm² + 4 × 0.34 mm²		–	18191355
		4 × 4 mm² + 3 × 1 mm² + 4 × 0.34 mm²		–	18191363
	SHB / M40 SpeedTec	4 × 6 mm² + 3 × 1.5 mm² + 4 × 0.34 mm²	SHB / M40 SpeedTec	–	18191371
		4 × 10 mm² + 3 × 1.5 mm² + 4 × 0.34 mm²		–	18191398

7.3 Encoder cable

7.3.1 Encoder cable for encoder EI7C FS

Overview

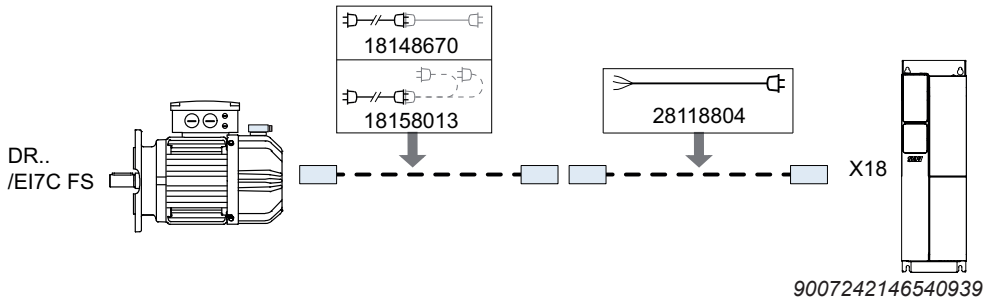

Mini IO X18 Basic unit encoder connection (safe encoder)

Encoder cable with Mini-IO to M12 socket

The safe encoder EI7C FS can only be evaluated by an inverter with safety variant CSL/CSS via encoder interface X18.

33955948/EN – 05/2026

If cable carrier installation is required, SEW-EURODRIVE recommends using the encoder cable "Mini IO to M12 socket" for the area with fixed routing and using an extension cable with M12 connector to M12 socket for the area with cable carrier installation.

	Motor side		Inverter side	
	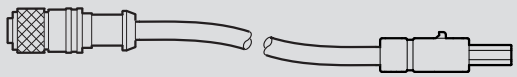			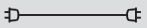 Fixed installation
Encoder type	**Connector type**	**Cable cross section**	**Connector type**	**Part number**
EI7C FS encoder	M12	–	Mini IO	28118804

Extension cable with M12 socket to M12 connector

	Motor side		Inverter side		
	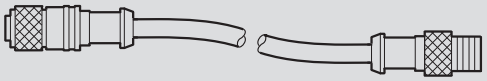			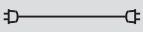 Fixed installation	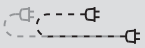 Cable carrier installation
Encoder type	**Connector type**	**Cable cross section**	**Connector type**	**Part number**	
EI7C FS encoder	M12	–	M12	18148670	18158013

33955948/EN – 05/2026

7.3.2 Encoder cable for HTL encoders

Encoders with an HTL interface are evaluated at the digital inputs of the inverter.

Overview

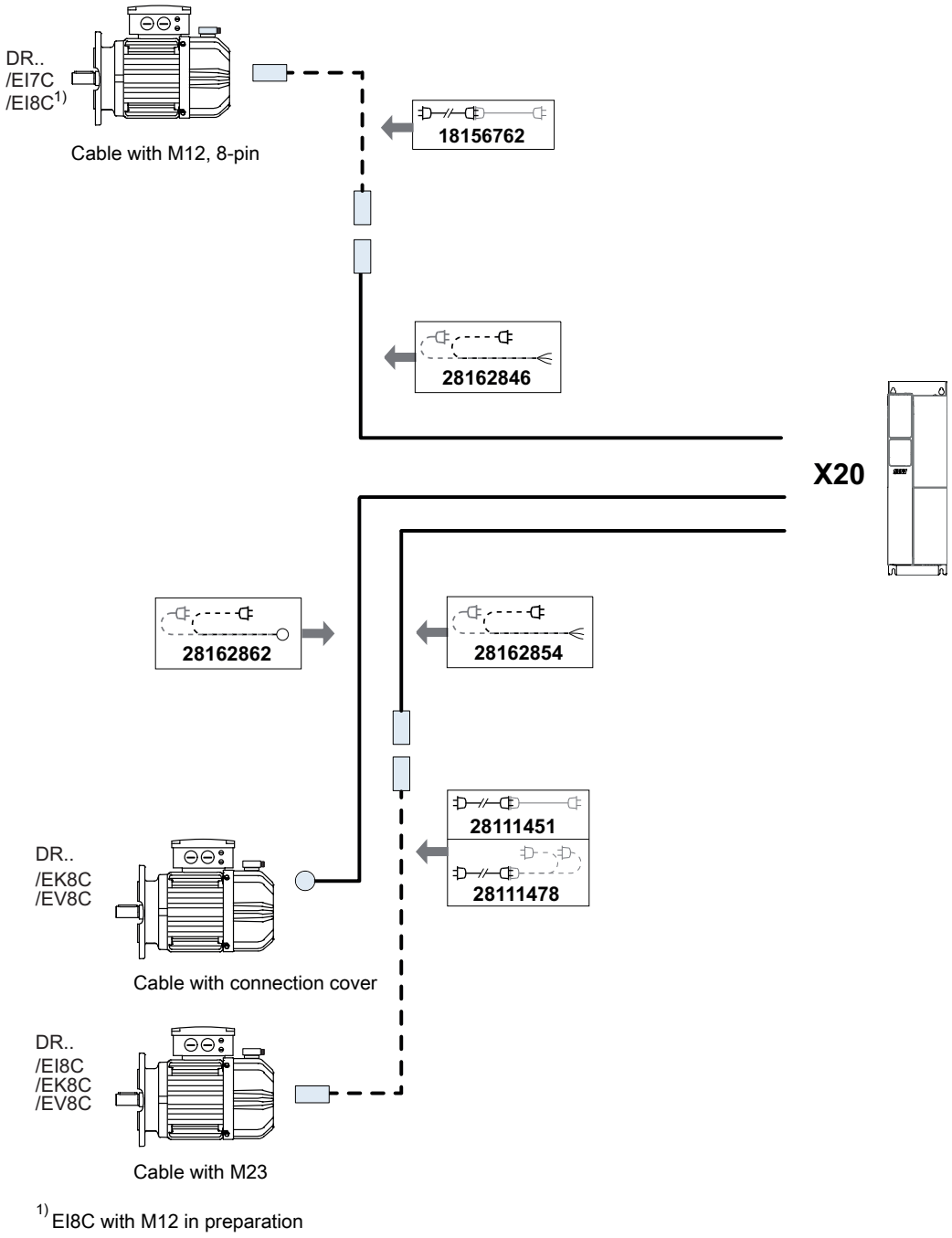

1) EI8C with M12 in preparation

9007239122060427

Open end X20 Basic unit encoder connection (HTL encoder)

Encoder cable with M12 socket to open end with conductor end sleeves for EI7C and EI8C encoders

For easy positioning, the EI7C HTL built-in encoder can be evaluated via the X20 digital inputs at any inverter with PROFINET, EtherNet/IP, Modbus TCP, EtherCAT®/CiA402, EtherCAT®/SBus^{PLUS} or POWERLINK/CiA402, with the exception of the device variant with binary control.

For speed control and positioning, the EI8C HTL built-in encoder can be evaluated via the X20 digital inputs at any inverter with PROFINET, EtherNet/IP, Modbus TCP, EtherCAT®/CiA402, EtherCAT®/SBus^{PLUS} or POWERLINK/CiA402, with the exception of the device variant with binary control.

	Motor side		**Inverter side**	
				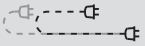 **Cable carrier installation**
Encoder type	**Connector type**	**Cable cross section**	**Connector type**	**Part number**
Encoder EI7C, EI8C	M12	4 × 2 × 0.25 mm²	Open end	28162846

Extension cable with M12 socket to M12 connector

	Motor side		**Inverter side**	
	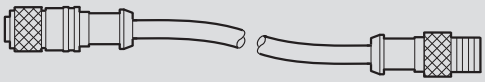			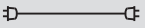 **Fixed installation**
Encoder type	**Connector type**	**Cable cross section**	**Connector type**	**Part number**
Encoder EI7C, EI8C	M12	–	M12	18156762

33955948/EN – 05/2026

Encoder cable with M23 socket to open end with conductor end sleeves for high-resolution HTL encoder

For speed control and positioning, high-resolution HTL encoders from SEW-EURODRIVE can be evaluated via the X20 digital inputs at any inverter with PROFINET, EtherNet/IP, Modbus TCP, EtherCAT®/CiA402, EtherCAT®/SBus^{PLUS} or POWERLINK/CiA402, with the exception of the device variant with binary control.

	Motor side / Inverter side			Cable carrier installation
	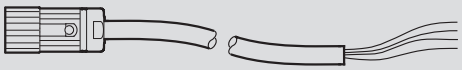			
Encoder type	**Connector type**	**Cable cross section**	**Connector type**	**Part number**
Encoder EI7C, EI8C	M23	5 × 2 × 0.25 mm² + 2 × 0.5 mm²	Open end	28162854

Extension cable with M23 socket contact to M23 connector for the high-resolution HTL encoder

	Motor side / Inverter side			Fixed installation	Cable carrier installation
	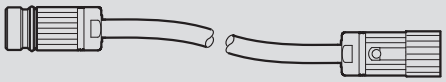				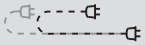
Encoder type	**Connector type**	**Cable cross section**	**Connector type**	**Part number**	
Encoder EI7C, EI8C	M23	–	M23	28111451	28111478

Encoder cable with connection cover to open end with conductor end sleeves for high-resolution HTL encoder

For speed control and positioning, the EK8C high-resolution HTL encoder from SEW-EURODRIVE can be evaluated via the X20 digital inputs at any inverter with PROFINET, EtherNet/IP, Modbus TCP, EtherCAT®/CiA402, EtherCAT®/SBus^{PLUS} or POWERLINK/CiA402, with the exception of the device variant with binary control.

33955948/EN – 05/2026

With EK8C/EV8C encoders with connection via the connection cover of the integrated encoder plug connector, the TF signals must be routed to the inverter in a separate cable.

	Motor side		Inverter side	
	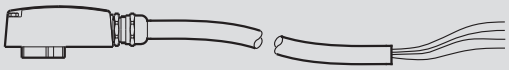			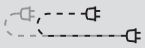 Cable carrier installation
Encoder type	**Connector type**	**Cable cross section**	**Connector type**	**Part number**
Encoder EK8C	Connection cover	5 × 2 × 0.25 mm² + 2 × 0.5 mm²	Open end	28162862

7.4 Cables for MOVILINK® DDI

7.4.1 Overview

The MOVILINK® DDI interface requires a coaxial cable for data transmission between the motor and the inverter. Depending on the motor cable cross section that is required, the coaxial cable is in the form of a hybrid cable (up to 10 mm²) or in separate cables (> 10 mm²).

The coaxial cable requires a FAKRA connector at the inverter and motor sides. SEW-EURODRIVE provides prefabricated cables with connectors already fitted. Rolls of bulk cable are also available, whereby the connectors must be fitted by the customer. The FAKRA connectors can be assembled using the "MOVILINK® DDI Tool Set 1".

Single-cable technology up to 10 mm²

Prefabricated hybrid cables for motors with MOVILINK® DDI interface are structured as follows:

- 1 conductor for the PE connection
- 3 conductors for controlling the motor
- 4 conductors for controlling the brake
- 1 coaxial cable for MOVILINK® DDI

With this universal hybrid cable, all variants of the brake can be controlled.

Multi-cable technology larger than 10 mm²

For cross sections larger than 10 mm², the coaxial cable is routed separately in a cable. Individual coaxial cables are available as prefabricated cables.

Six plugging positions are available.

33955948/EN – 05/2026

The coaxial cable at the motor side is always connected using an M23 connector.

Number of plug-in locations

The coaxial technology from MOVILINK® DDI allows for multiple plugging positions. Up to 4 plugging positions can be implemented, whereby merely plugging positions with an M23 or M40 plug connector are counted. The plugging positions of the FAKRA plug connector within the motor in the terminal box, on the encoder module, or on the inverter itself are not counted.

Examples for the numbering system of the plugging positions:

- Cable from MOVIDRIVE® to the DRN.. motor with KD1 (M23 plug connector): 1 plugging position
- Cable from MOVIMOT® flexible with M23 to the DRN.. motor with KD1 (M23 plug connector): 2 plugging positions
- Cable from MOVIDRIVE® to the DRN.. motor with KD1 (M23 plug connector) connected to an extension cable M23 to M23: 2 plugging positions
- Cable from MOVIMOT® flexible with M23 to the DRN.. motor with KD1 (M23 plug connector) connected to an extension cable M23 to M23: 3 plugging positions
- Cable from MOVIDRIVE® to the DRN.. motor with KD (hybrid cable gland without connector): 0 plugging positions

Interlocking of the plug connectors

MOVILINK® DDI cables with plugs are supplied as standard with quick-locking SpeedTec plugs. Please note that this interlocking must be fully closed to ensure interference-free signal transmission via MOVILINK® DDI.

Hybrid cables with connector on the motor side, open end on the inverter side

The cable is used for the following inverters:

- MOVIDRIVE®
- MOVITRAC® advanced
- MOVIMOT® flexible

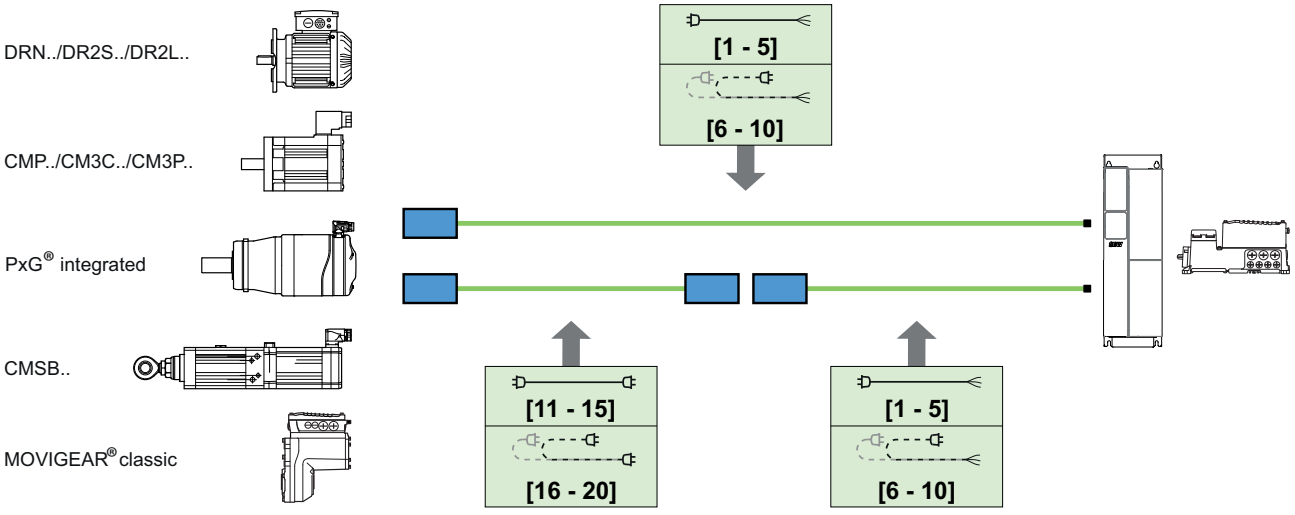

54043225020098571

Hybrid cables with open end on the motor side, open end on the inverter side

The cable is used for the following inverters:

- MOVIDRIVE®
- MOVITRAC® advanced
- MOVIMOT® flexible

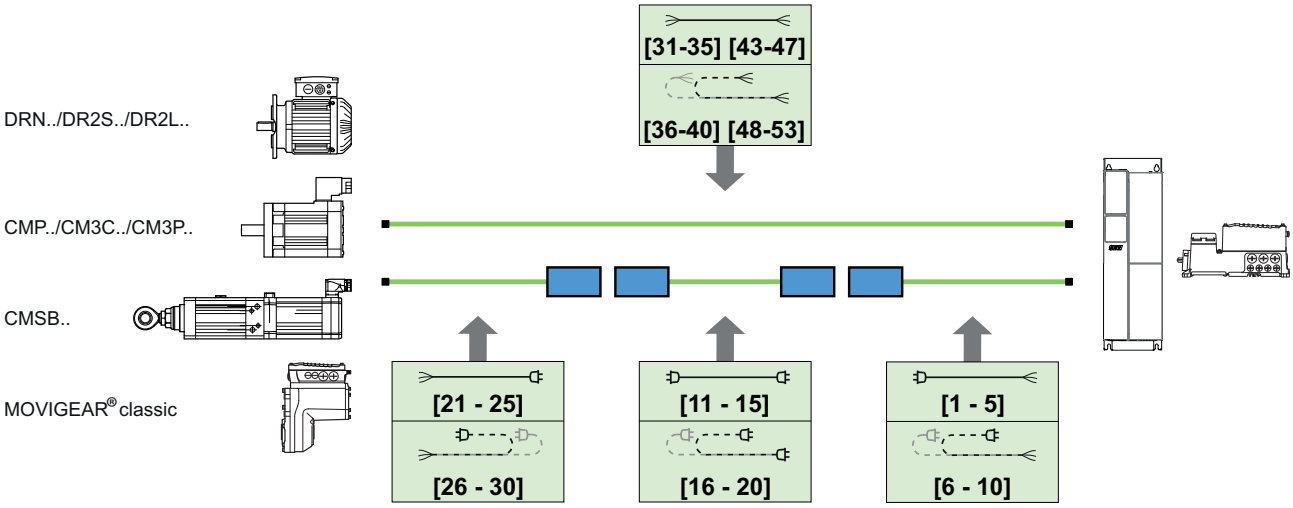

63050424274841995

Adapter cables for MOVILINK® DDI FAKRA connector to FAKRA connector

Adapter cables are available for connecting the open FAKRA connector. This enables the connection of self-prefabricated cables with an open end and a FAKRA connector. The FAKRA connector is compatible with all prefabricated cables for MOVILINK® DDI with open end from SEW-EURODRIVE.

Areas of application of the adapter cables:

- Short connection distances
- Adaptation of MOVILINK® DDIsignal cables in connection boxes
- Adaptation of MOVILINK® DDIsignal connections in boxes with maintenance switches for separating the motor and brake cores

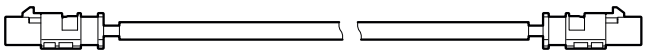

40957566603

Part number	Installation type	Length	Connection	Motor side	Inverter side
28170792	Fixed	200 mm	FAKRA connector	male	male

33955948/EN – 05/2026

Coaxial signal cable with plug or open end on motor side, with open end on inverter side

The coaxial cable is required for a cross section greater than 10 mm² for the conductors for controlling the motor and contains the data line for the MOVILINK® DDI connection. The cable for connecting the motor and the brake must be laid separately.

The cable is used for the following inverters:

- MOVIDRIVE®
- MOVITRAC® advanced

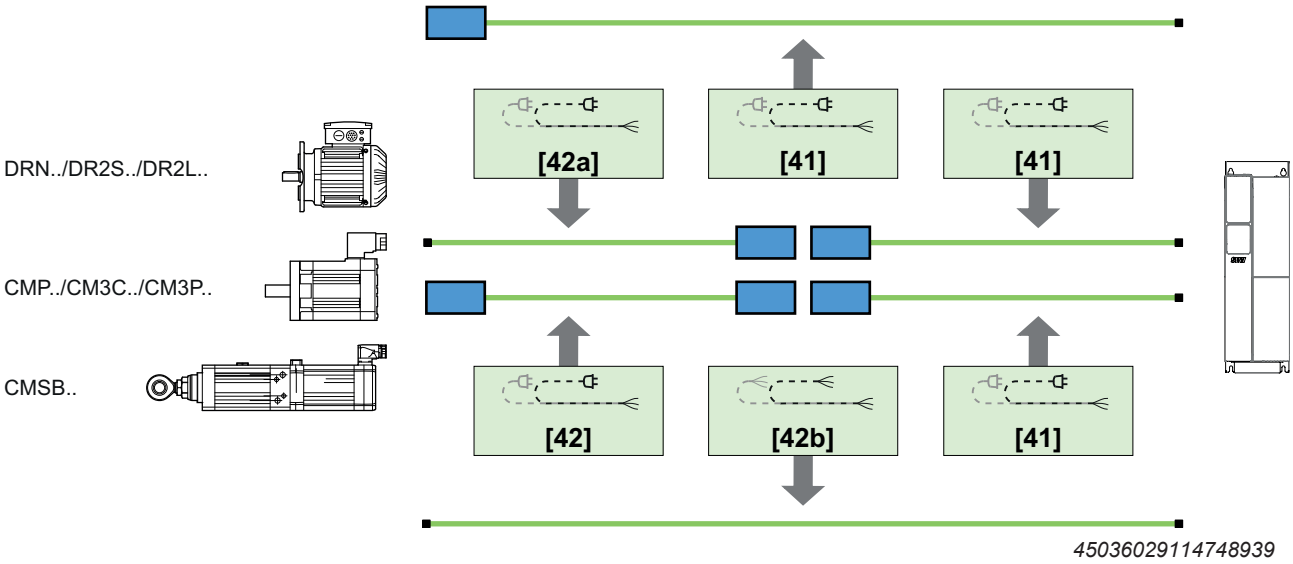

45036029114748939

Cable tables

The available connection options depend on the series of your motor or gearmotor.

The prefabricated cables with open ends on the motor side and on the inverter side can also be supplied as cable reels in lengths of 30 m, 100 m and 200 m. These cables are not prefabricated.

For more information on assembly, refer to the addendum to the "MOVILINK® DDI Tool Set 1" operating instructions.

Cables with hybrid connectors or open ends for power and FAKRA connector

The following table shows prefabricated cables for MOVILINK® DDI.

"Open" means that the power cores for the motor and brake are open and MOVILINK® DDI is connected via a FAKRA connector. If there is purely an open signal cable, only the FAKRA connector is present.

No.	Part number	Cross section in mm²	Installation type	Motor connection	Motor side	Inverter side
[1]	28123808	4 × 1.5 + 4 × 1 + coaxial signal cable	Fixed installation	SD1/KD1	M23	Open
[2]	28123816	4 × 2.5 + 4 × 1 + coaxial signal cable	Fixed installation	SD1/KD1	M23	Open
[3]	28123824	4 × 4 + 4 × 1 + coaxial signal cable	Fixed installation	SD1/KD1	M23	Open
[4]	28123832	4 × 6 + 4 × 1.5 + coaxial signal cable	Fixed installation	SDB/KDB	M40	Open
[5]	28123840	4 × 10 + 4 × 1.5 + coaxial signal cable	Fixed installation	SDB/KDB	M40	Open
[6]	28123743	4 × 1.5 + 2 × (2 × 1) + coaxial signal cable	Cable carrier installation	SD1/KD1	M23	Open

No.	Part number	Cross section in mm²	Installation type	Motor connection	Motor side	Inverter side
[7]	28123751	4 × 2.5 + 2 × (2 × 1) + coaxial signal cable	Cable carrier installation	SD1/KD1	M23	Open
[8]	28123778	4 × 4 + 2 × (2 × 1) + coaxial signal cable	Cable carrier installation	SD1/KD1	M23	Open
[8b][1)]	28148576	4 × 1.5 + 2 × (2 × 1) + coaxial signal cable	Cable carrier installation	SD1/KD1	M23[1)]	Open
[9]	28123786	4 × 6 + 2 × (2 × 1.5) + coaxial signal cable	Cable carrier installation	SDB/KDB	M40	Open
[10]	28123794	4 × 10 + 4 × 1.5 + coaxial signal cable	Cable carrier installation	SDB/KDB	M40	Open
[11]	28123905	4 × 1.5 + 4 × 1 + coaxial signal cable	Fixed installation	SD1/KD1	M23	M23
[12]	28123913	4 × 2.5 + 4 × 1 + coaxial signal cable	Fixed installation	SD1/KD1	M23	M23
[13]	28123921	4 × 4 + 4 × 1 + coaxial signal cable	Fixed installation	SD1/KD1	M23	M23
[14]	28123948	4 × 6 + 4 × 1.5 + coaxial signal cable	Fixed installation	SDB/KDB	M40	M40
[15]	28123956	4 × 10 + 4 × 1.5 + coaxial signal cable	Fixed installation	SDB/KDB	M40	M40
[16]	28123859	4 × 1.5 + 2 × (2 × 1) + coaxial signal cable	Cable carrier installation	SD1/KD1	M23	M23
[17]	28123867	4 × 2.5 + 2 × (2 × 1) + coaxial signal cable	Cable carrier installation	SD1/KD1	M23	M23
[18]	28123875	4 × 4 + 2 × (2 × 1) + coaxial signal cable	Cable carrier installation	SD1/KD1	M23	M23
[18b]	28147170	4 × 4 + 2 × (2 × 1) + coaxial signal cable (motor phases swapped)	Cable carrier installation	SD1/KD1	M23	M23
[19]	28123883	4 × 6 + 2 × (2 × 1.5) + coaxial signal cable	Cable carrier installation	SDB/KDB	M40	M40
[20]	28123891	4 × 10 + 4 × 1.5 + coaxial signal cable	Cable carrier installation	SDB/KDB	M40	M40
[21]	28124367	4 × 1.5 + 4 × 1 + coaxial signal cable	Fixed installation	KD	Open	M23
[22]	28124375	4 × 2.5 + 4 × 1 + coaxial signal cable	Fixed installation	KD	Open	M23
[23]	28124383	4 × 4 + 4 × 1 + coaxial signal cable	Fixed installation	KD	Open	M23
[23b]	28183908	4 × 1 + coaxial signal cable (only brake + coaxial signal cable)	Fixed installation	KD	Open	M23
[24]	28143884	4 × 6 + 4 × 1.5 + coaxial signal cable	Fixed installation	KD	Open	M40
[25]	28143892	4 × 10 + 4 × 1.5 + coaxial signal cable	Fixed installation	KD	Open	M40
[26]	28124332	4 × 1.5 + 2 × (2 × 1) + coaxial signal cable	Cable carrier installation	KD	Open	M23
[27]	28124340	4 × 2.5 + 2 × (2 × 1) + coaxial signal cable	Cable carrier installation	KD	Open	M23
[28]	28124359	4 × 4 + 2 × (2 × 1) + coaxial signal cable	Cable carrier installation	KD	Open	M23
[29]	28143868	4 × 6 + 2 × (2 × 1.5) + coaxial signal cable	Cable carrier installation	KD	Open	M40
[30]	28143876	4 × 10 + 4 × 1.5 + coaxial signal cable	Cable carrier installation	KD	Open	M40
[31]	28152395	4 × 1.5 + 4 × 1 + coaxial signal cable	Fixed installation	KD	Open	Open
[32]	28152409	4 × 2.5 + 4 × 1 + coaxial signal cable	Fixed installation	KD	Open	Open
[33]	28152417	4 × 4 + 4 × 1 + coaxial signal cable	Fixed installation	KD	Open	Open

33955948/EN – 05/2026

No.	Part number	Cross section in mm²	Installation type	Motor connection	Motor side	Inverter side
[34]	28152425	4 × 6 + 4 × 1.5 + coaxial signal cable	Fixed installation	KD	Open	Open
[35]	28152433	4 × 10 + 4 × 1.5 + coaxial signal cable	Fixed installation	KD	Open	Open
[36]	28152441	4 × 1.5 + 2 × (2 × 1) + coaxial signal cable	Cable carrier installation	KD	Open	Open
[37]	28152468	4 × 2.5 + 2 × (2 × 1) + coaxial signal cable	Cable carrier installation	KD	Open	Open
[38]	28152476	4 × 4 + 2 × (2 × 1) + coaxial signal cable	Cable carrier installation	KD	Open	Open
[39]	28152484	4 × 6 + 2 × (2 × 1.5) + coaxial signal cable	Cable carrier installation	KD	Open	Open
[40]	28152492	4 × 10 + 4 × 1.5 + coaxial signal cable	Cable carrier installation	KD	Open	Open
[41]	28129431	Coaxial signal cable	Cable carrier installation	SMCD/SBCD/ KDD	M23	Open
[42]	28138376	Coaxial signal cable	Cable carrier installation	SMCD/SBCD/ KDD	M23	M23
[42a]	28199103	Coaxial signal cable	Cable carrier installation	KD	Open	M23
[42b]	28183762	Coaxial signal cable	Cable carrier installation	KD	Open	Open

1) Version as right-angle connector.

Cable for field termination (open end) with FAKRA connector

The following table lists cables for field termination. You can order the cables from SEW-EURODRIVE in lengths of 30 m, 100 m, 200 m, and 250 m. The cables are supplied as coils. Other lengths are available upon request.

No.	Part number	Cross section in mm²	Installation type	Motor connection	Motor side	Inverter side
[43]	28123395	4 × 1.5 + 4 × 1 + coaxial signal cable	Fixed installation	KD	cut off	cut off
[44]	28123409	4 × 2.5 + 4 × 1 + coaxial signal cable	Fixed installation	KD	cut off	cut off
[45]	28123417	4 × 4 + 4 × 1 + coaxial signal cable	Fixed installation	KD	cut off	cut off
[46]	28123425	4 × 6 + 4 × 1.5 + coaxial signal cable	Fixed installation	KD	cut off	cut off
[47]	28123433	4 × 10 + 4 × 1.5 + coaxial signal cable	Fixed installation	KD	cut off	cut off
[48]	28123336	4 × 1.5 + 2 × (2 × 1) + coaxial signal cable	Cable carrier installation	KD	cut off	cut off
[49]	28123344	4 × 2.5 + 2 × (2 × 1) + coaxial signal cable	Cable carrier installation	KD	cut off	cut off
[50]	28123352	4 × 4 + 2 × (2 × 1) + coaxial signal cable	Cable carrier installation	KD	cut off	cut off
[51]	28123360	4 × 6 + 2 × (2 × 1.5) + coaxial signal cable	Cable carrier installation	KD	cut off	cut off
[52]	28123379	4 × 10 + 4 × 1.5 + coaxial signal cable	Cable carrier installation	KD	cut off	cut off
[53]	25672568	Coaxial signal cable	Cable carrier installation	KD	cut off	cut off

7.4.2 Motor cables for motors without brake with MOVILINK® DDI interface

Connecting cables with connectors on the motor side for the following motors:

- DRN../DR2../DRU.. AC motors
- CMP../CM3C../CM3P../CMSB.. synchronous motors
- Drive unit MOVIGEAR® classic

33955948/EN – 05/2026

The following table shows the conductor assignment of the cables:

MOVIDRIVE® modular/system/technology, MOVITRAC® advanced

Motor side	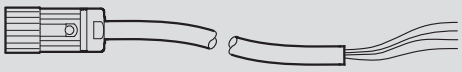	Inverter side

Contact		Signal	Core color	Conductor color IEC 60757	Marking	Assembly	Description
M23	M40						
U	U	U	Black	BK	U/L1	Not prefabricated	Connection Motor phase U
V	V	V	Black	BK	V/L2	Not prefabricated	Connection Motor phase V
W	W	W	Black	BK	W/L3	Not prefabricated	Connection Motor phase W
A	1	Re-served	Yellow	YE	A	Not prefabricated	Do not connect
B	+	Re-served	Orange	OG	B	Not prefabricated	Do not connect
C	N	Re-served	Pink	PK	C	Not prefabricated	Do not connect
D	2	Re-served	Violet	VT	D	Not prefabricated	Do not connect
PE	PE	PE	Yellow/ green	YE/GN	–	Not prefabricated	Connection Protective earth
DDI	DDI	DDI	Violet	VT	–	Coaxial con-nector	MOVILINK® DDI

Insulate each unconnected conductor end.

33955948/EN – 05/2026

7.4.3 Motor cables for motors with BE or BZ brake with MOVILINK® DDI interface

Connecting cables with connectors on the motor side for the following motors:

- DRN../DR2../DRU.. AC motors
- CM3C.. synchronous motors

The following table shows the conductor assignment of the cables:

Motor side 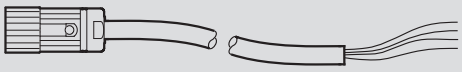 **Inverter side**

Contact		Signal	Core color	Conductor color IEC 60757	Marking	Assembly	Description
M23	M40						
U	U	U	Black	BK	U/L1	Not prefabricated	Connection Motor phase U
V	V	V	Black	BK	V/L2	Not prefabricated	Connection Motor phase V
W	W	W	Black	BK	W/L3	Not prefabricated	Connection Motor phase W
A	1	Re-served	Yellow	YE	A	Not prefabricated	Do not connect
B	+	15	Orange	OG	B	Not prefabricated	Connection Brake 15
C	N	13	Pink	PK	C	Not prefabricated	Connection Brake 13
D	2	14	Violet	VT	D	Not prefabricated	Connection Brake 14
PE	PE	PE	Yellow/ green	YE/GN	–	Not prefabricated	Connection Protective earth
DDI	DDI	DDI	Violet	VT	–	Coaxial con-nector	MOVILINK® DDI

Insulate each unconnected conductor end.

33955948/EN – 05/2026

7.4.4 Motor cables for motors with BK or BP brake with MOVILINK® DDI interface

Connecting cables with connectors on the motor side for the following motors:

- CMP../CM3C.. synchronous motors

The following table shows the conductor assignment of the cables:

Motor side 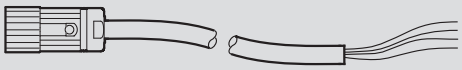 **Inverter side**

Contact M23	Contact M40	Signal	Conductor color	Conductor color IEC 60757	Marking	Assembly	Description
U	U	U	Black	BK	U/L1	Not prefabricated	Connection Motor phase U
V	V	V	Black	BK	V/L2	Not prefabricated	Connection Motor phase V
W	W	W	Black	BK	W/L3	Not prefabricated	Connection Motor phase W
A	1	Brake -	Yellow	YE	A	Not prefabricated	Connection Brake -
B	+	Re-served	Orange	OG	B	Not prefabricated	Do not connect
C	N	Re-served	Pink	PK	C	Not prefabricated	Do not connect
D	2	Brake +	Violet	VT	D	Not prefabricated	Connection Brake +
PE	PE	PE	Yellow/ green	YE/GN	–	Not prefabricated	Connection Protective earth
DDI	DDI	DDI	Violet	VT	–	Coaxial con-nector	MOVILINK® DDI

Insulate each unconnected conductor end.

33955948/EN – 05/2026

7.4.5 Motor cables for motors with integrated BG.Z brake control

Connecting cables with connectors on the motor side for the following motors:

- DRN../DR2S../DR2L.. asynchronous motors
- CMP../CM3C.. synchronous motors

The following table shows the conductor assignment of the cables:

Motor side	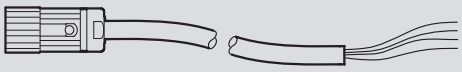	Inverter side

Contact		Signal	Core color	Conductor color IEC 60757	Marking	Assembly	Description
M23	M40						
U	U	U	Black	BK	U/L1	Not prefabricated	Connection Motor phase U
V	V	V	Black	BK	V/L2	Not prefabricated	Connection Motor phase V
W	W	W	Black	BK	W/L3	Not prefabricated	Connection Motor phase W
A	1	Re-served	Yellow	YE	A	Not prefabricated	Do not connect
B	+	N (L2)	Orange	OG	B	Not prefabricated	Brake con-nection, neu-tral con-ductor N (or phase L2)
C	N	Re-served	Pink	PK	C	Not prefabricated	Do not connect
D	2	L1	Violet	VT	D	Not prefabricated	Brake con-nection, phase L1
PE	PE	PE	Yellow/ green	YE/GN	–	Not prefabricated	Connection Protective earth
DDI	DDI	DDI	Violet	VT	–	Coaxial con-nector	MOVILINK® DDI

Insulate each unconnected conductor end.

33955948/EN – 05/2026

7.4.6 Motor cables for motors with integrated BS.Z brake control

Connecting cables with connectors on the motor side for the following motors:

- CM3C../CM3P.. synchronous motors

The following table shows the conductor assignment of the cables:

Motor side 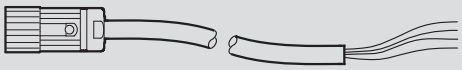 **Inverter side**

Contact		Signal	Core color	Conductor color IEC 60757	Marking	Assembly	Description
M23	M40						
U	U	U	Black	BK	U/L1	Not prefabricated	Connection Motor phase U
V	V	V	Black	BK	V/L2	Not prefabricated	Connection Motor phase V
W	W	W	Black	BK	W/L3	Not prefabricated	Connection Motor phase W
A	1	GND	Yellow	YE	A	Not prefabricated	Connection GND
B	+	DC 24 V	Orange	OG	B	Not prefabricated	Connection DC 24 V
C	N	Re-served	Pink	PK	C	Not prefabricated	Do not connect
D	2	Re-served	Violet	VT	D	Not prefabricated	Do not connect
PE	PE	PE	Yellow/ green	YE/GN	–	Not prefabricated	Connection Protective earth
DDI	DDI	DDI	Violet	VT	–	Coaxial con-nector	MOVILINK® DDI

Insulate each unconnected conductor end.

33955948/EN – 05/2026

7.4.7 Motor cables for motors with integrated braking resistor

Connecting cables with connectors on the motor side for the following motors:

- MOVIGEAR® classic drive unit

The following table shows the conductor assignment of the cables:

Motor side 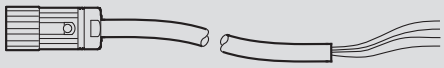 **Inverter side**

Contact M23	Contact M40	Signal	Conductor color	Conductor color IEC 60757	Identification	Assembly	Description
U	U	U	Black	BK	U/L1	Not prefabricated	Motor connection phase U
V	V	V	Black	BK	V/L2	Not prefabricated	Motor connection phase V
W	W	W	Black	BK	W/L3	Not prefabricated	Motor connection phase W
A	1	Reserved	Yellow	YE	A	Not prefabricated	Do not connect
B		Braking resistor	Orange	OG	B	Not prefabricated	Braking resistor connection
C		Braking resistor	Pink	PK	C	Not prefabricated	Braking resistor connection
D	2	Reserved	Violet	VT	D	Not prefabricated	Do not connect
PE	PE	PE	Yellow/ green	YE/GN		Not prefabricated	Protective earth connection
DDI	DDI	DDI	Violet	VT		Coaxial connector	MOVILINK® DDI

Insulate each unconnected conductor end.

7.4.8 Coaxial cables with separate routing of power and signal cable

The power cable and signal cable can only be routed together up to a cable cross section of 10 mm^2. With larger cable cross sections, the power cable is routed separately from the signal cable.

MOVIDRIVE® modular/system/technology, MOVITRAC® advanced

Motor side 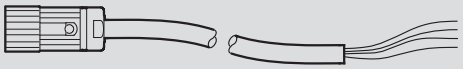 **Inverter side**

Contact M23	Signal	Core color	Conductor color IEC 60757	Marking	Assembly	Description
DDI	DDI	Violet	VT	–	Coaxial connector	MOVILINK® DDI

33955948/EN – 05/2026

7.5 System bus cables

The system bus cable is used to connect the devices with the EtherCAT®/SBUS^{PLUS} interface.

The RJ45 connectors and the socket contacts in the inverters have been checked for mechanical stability and contact reliability by SEW-EURODRIVE. SEW-EURODRIVE recommends using the cables listed below. If other cables and connectors are used, SEW-EURODRIVE makes no statement about the quality of the plug-in connection.

NOTICE

Using the wrong cables.

Inverter damage.

The system bus cables may only be designed with RJ45 connectors with 4-pin assignment. When using an RJ45 connector with 8-pin assignment at this point, malfunctions or defects may occur at the connected devices.

When RJ45 cables are being used, it must be ensured that the RJ45 connectors are equipped with all contacts.

7.5.1 Overview

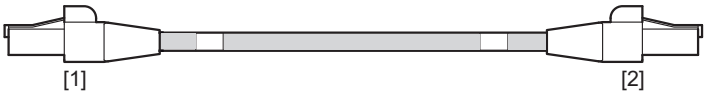

9007214291596811

[1] Connector, red [2] Connector, red

The 4-pin system bus cable [2] for EtherCAT® and SBus^{PLUS} is used between the automation components.

Some of these automation components are:

- MOVI-C® CONTROLLER
- Inverter
- PC with MOVISUITE® engineering software
- MOVI-PLC® I/O system
- Additional EtherCAT® stations on the EtherCAT®/SBus^{PLUS}

7.5.2 Cable assignment

The cable is available in the following lengths for fixed installation:

Cable length	Part number
0.29 m	18179959
0.44 m	18179967
0.75 m	18167039
1.5 m	18179975
3 m	18167047
5 m	18179983
10 m	18179991

33955948/EN – 05/2026

If you use system bus cables from other manufacturers, it is necessary to comply with the relevant requirements of the "EtherCAT® Technology Group" (ETG). On this subject, note the "EtherCAT® Installation Guideline" from the ETG.

7.5.3 RJ45 connector

SEW-EURODRIVE recommends using the following connectors from Harting if the prefabricated cables from SEW-EURODRIVE are not used.

Harting order designation	Description	Conductor cross section
RJ45 CONNECTOR, PLUG, 4P4C, CAT5, 09451511100	RJ45 connector to IEC 60603-7, 4-pin	• Litz wires: 0.22 – 0.32 mm² • Wire: 0.26 – 0.32 mm² • Cable jacket: Ø 6.1 to 6.9 mm
RJ45 CONNECTOR, PLUG, 8P4C, CAT5, IDC09451511109		• Litz wires: 0.12 mm² • Cable jacket: Ø 6.1 to 6.9 mm

Connector characteristics:

- Can be preassembled in the field without tools
- Transmission category CAT 5
- Suitable for connecting litz wires and wires
- UL approval

7.5.4 Pin assignment

The prefabricated system bus cables are assigned according to EIA/TIA-568A. Also use this assignment for prefabrication in the field.

Contact	Conductor color	Function
1	White/green	RX+
2	Green	RX-
3	White/orange	TX+
4	Reserved	–
5	Reserved	–
6	Orange	TX-
7	Reserved	–
8	Reserved	–

33955948/EN – 05/2026

8 Device structure

8.1 Inverter

8.1.1 Size 0S

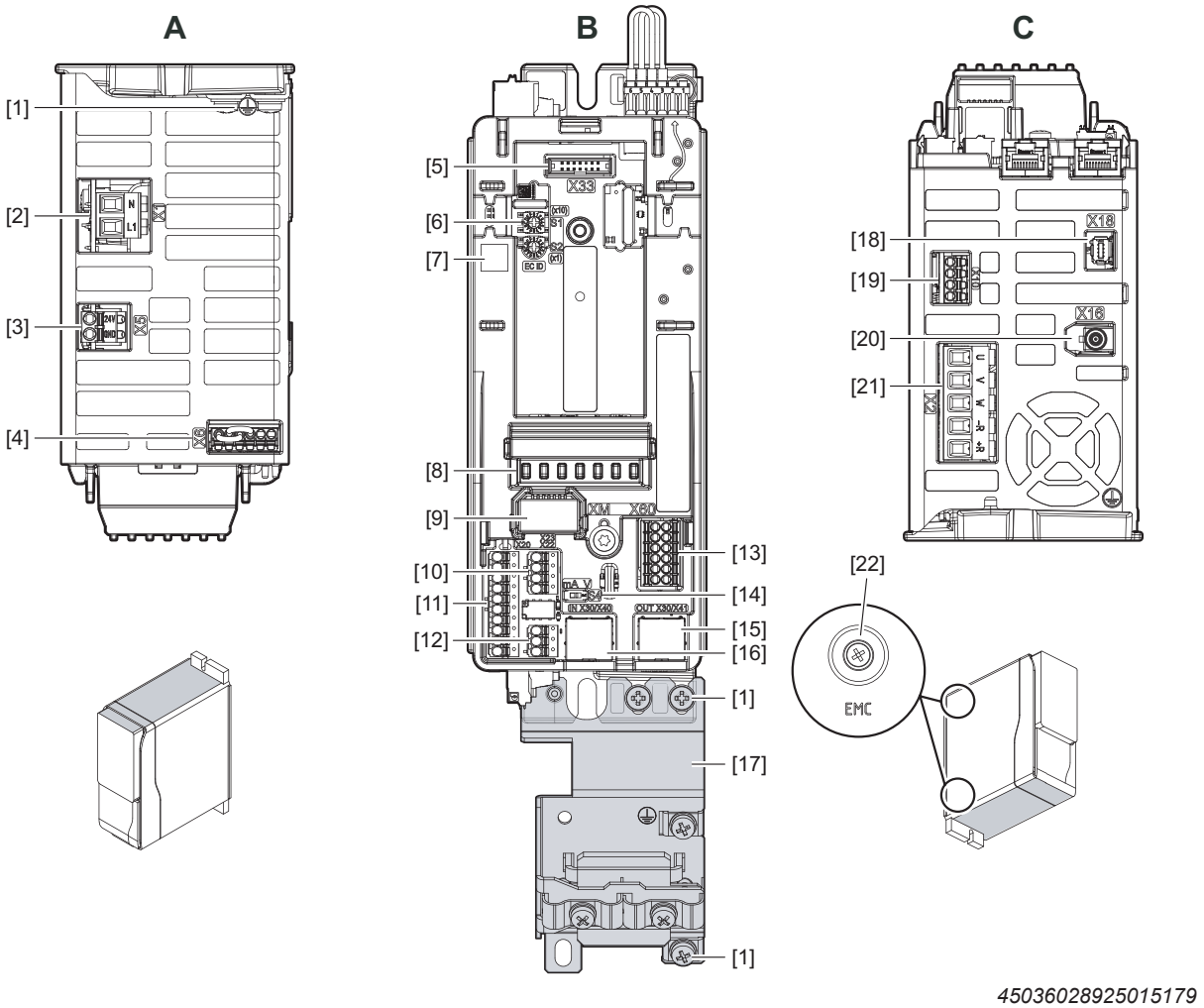

45036028925015179

A View from top
[1] 4 × housing PE connection
[2] X1: Supply system connection
[3] X5: 24 V supply voltage
[4] X6: Safe Torque Off (STO) connection

B View from front
[5] X33: Interface for CDM11A or CBG01A
[6] S1/S2: EtherCAT® ID switch
[7] Product label with QR code
[8] Status LEDs
[9] Memory module
[10] X23: Analog inputs or analog outputs
[11] X20: Digital inputs or digital outputs
[12] X22: Isolated relay contact
[13] X60: safe digital inputs or digital outputs
[14] S4: Changeover analog input mA/V
[15] X30/X41 OUT: Fieldbus
[16] X30/X40 IN: Fieldbus
[17] Signal and power cable shield plate

C View from below
[18] X18: FS encoder connection
[19] X10: Brake control and motor temperature monitoring
[20] X16: MOVILINK® DDI connection
[21] X2: Motor and braking resistor connection
[22] EMC: Contact screws for TN/TT systems on the left side of the inverter (underneath the housing)

33955948/EN – 05/2026

8.1.2 Size 0L

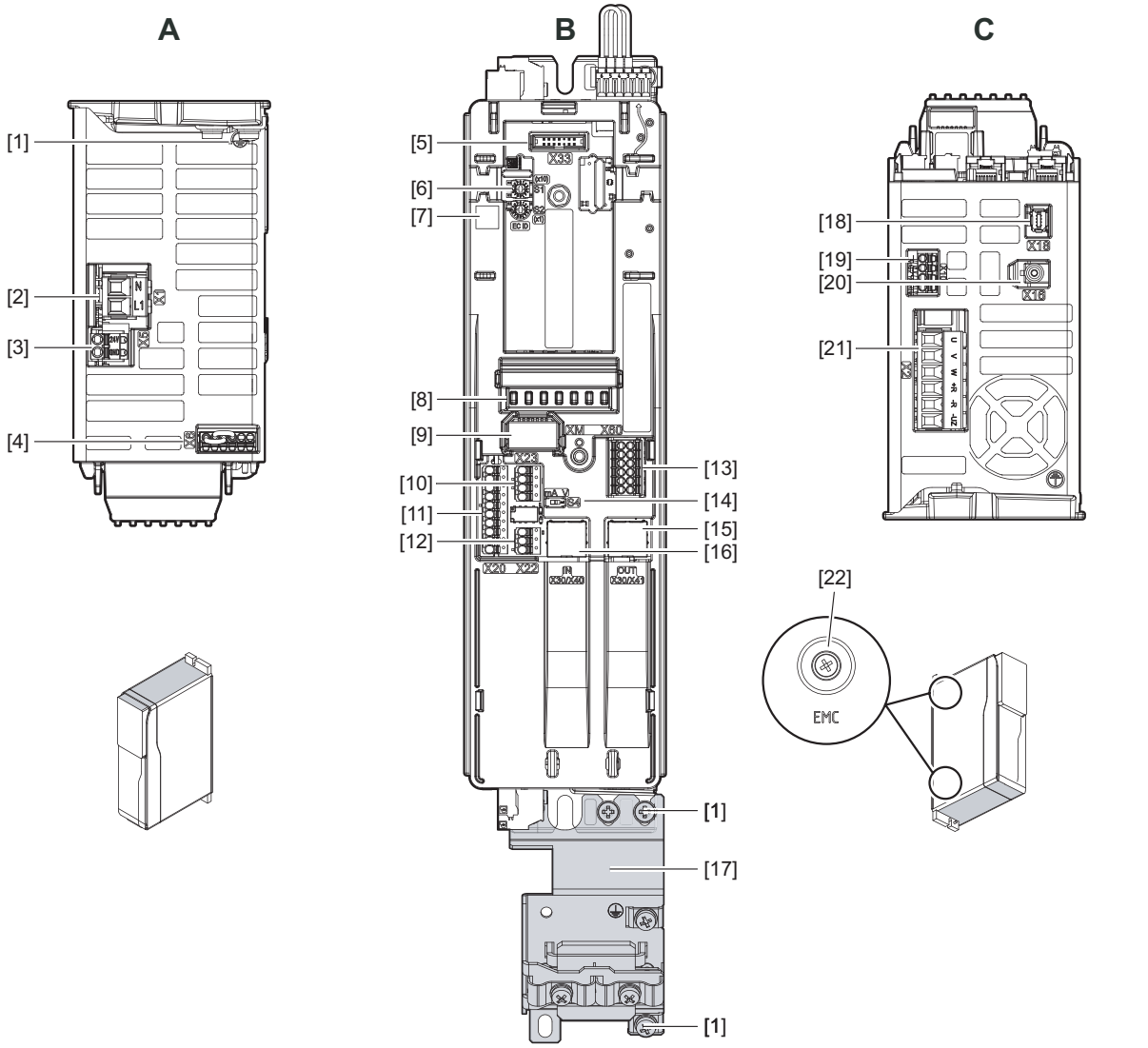

36028829670271115

A View from top
[1] 4 × housing PE connection
[2] X1: Supply system connection
[3] X5: 24 V supply voltage
[4] X6: Safe Torque Off (STO) connection

B View from front
[5] X33: Interface for CDM11A or CBG01A
[6] S1/S2: EtherCAT® ID switch
[7] Product label with QR code
[8] Status LEDs
[9] Memory module
[10] X23: Analog inputs or analog outputs
[11] X20: Digital inputs or digital outputs
[12] X22: Isolated relay contact
[13] X60: safe digital inputs or digital outputs
[14] S4: Changeover analog input mA/V
[15] X30/X41 OUT: Fieldbus
[16] X30/X40 IN: Fieldbus
[17] Signal and power cable shield plate

C View from below
[18] X18: FS encoder connection
[19] X10: Brake control and motor temperature monitoring
[20] X16: MOVILINK® DDI connection
[21] X2: Motor, braking resistor and DC link connection
[22] EMC: Contact screws for TN/TT systems on the left side of the inverter (underneath the housing)

33955948/EN – 05/2026

8.1.3 Size 3

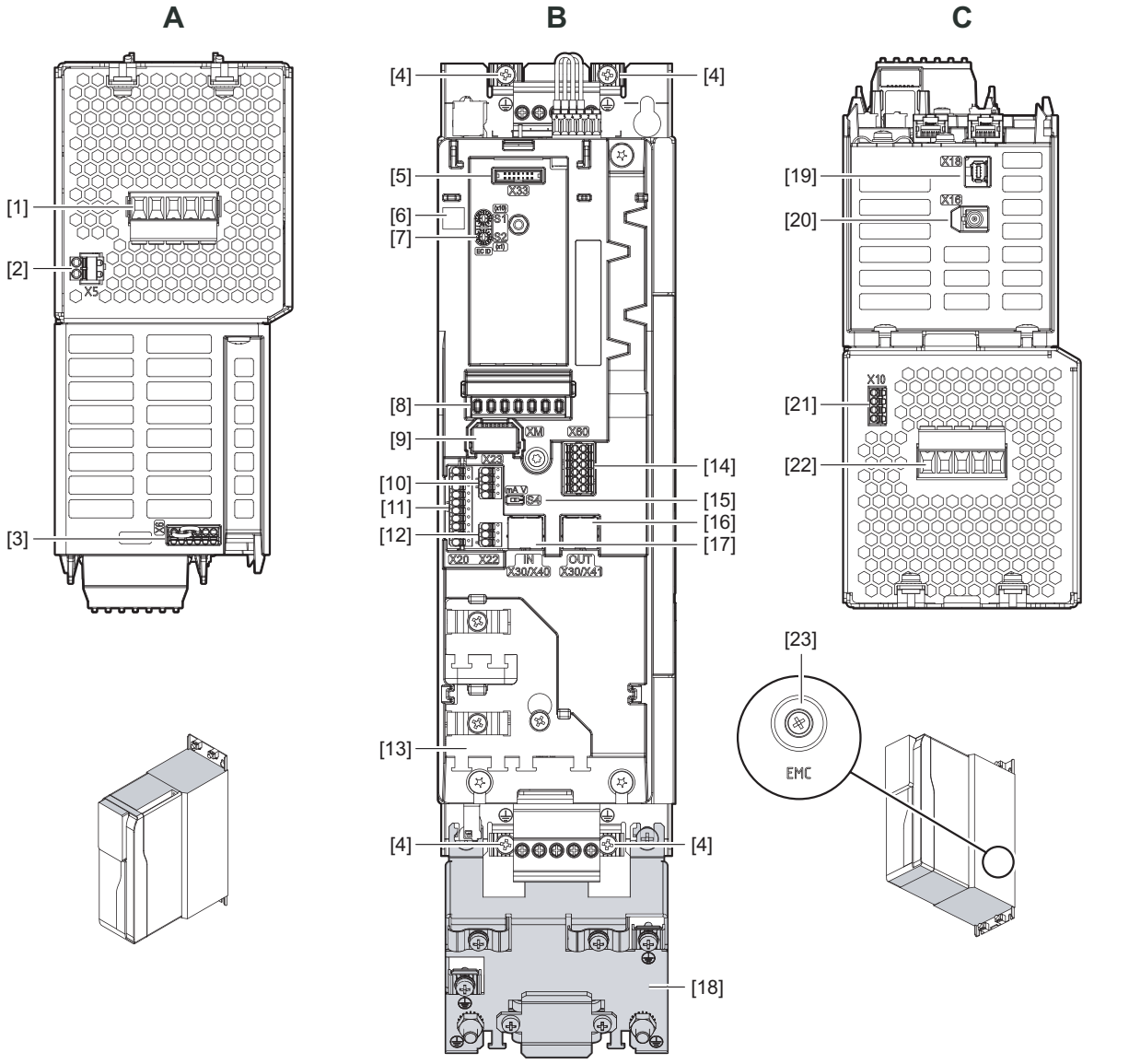

27021631519583755

A View from top
[1] X1: Supply system and DC link connection
[2] X5: 24 V supply voltage
[3] X6: Safe Torque Off (STO) connection

B View from front
[4] 4 × housing PE connection
[5] X33: Interface for CDM11A or CBG01A
[6] Product label with QR code
[7] S1/S2: EtherCAT® ID switch
[8] Status LEDs
[9] Memory module
[10] X23: Analog inputs or analog outputs
[11] X20: Digital inputs or digital outputs
[12] X22: Isolated relay contact
[13] Signal and control cable shield plate
[14] X60: safe digital inputs or digital outputs
[15] S4: Changeover analog input mA/V
[16] X30/X41 OUT: Fieldbus
[17] X30/X40 IN: Fieldbus
[18] Signal and power cable shield plate

C View from below
[19] X18: FS encoder connection
[20] X16: MOVILINK® DDI connection
[21] X10: Brake control and motor temperature monitoring
[22] X2: Motor and braking resistor connection
[23] EMC: Contact screw for TN/TT systems on the right side of the inverter

33955948/EN – 05/2026

8.1.4 Size 4

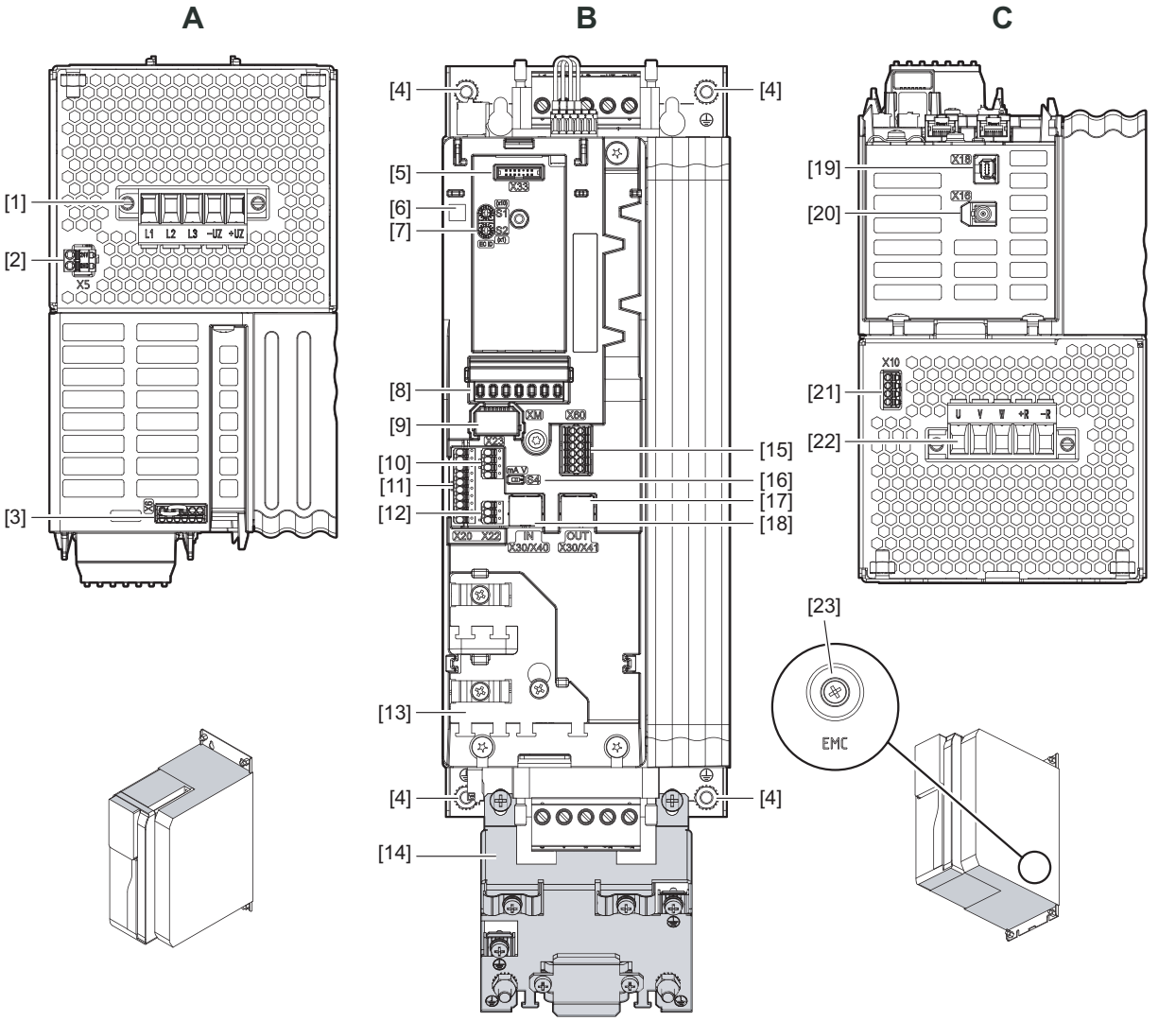

27021630330061835

A View from top
[1] X1: Supply system and DC link connection
[2] X5: 24 V supply voltage
[3] X6: Safe Torque Off (STO) connection

B View from front
[4] 4 × housing PE connection
[5] X33: Interface for CDM11A or CBG01A
[6] Product label with QR code
[7] S1/S2: EtherCAT® ID switch
[8] Status LEDs
[9] Memory module
[10] X23: Analog inputs or analog outputs
[11] X20: Digital inputs or digital outputs
[12] X22: Isolated relay contact
[13] Signal and control cable shield plate
[14] Signal and power cable shield plate
[15] X60: safe digital inputs or digital outputs
[16] S4: Changeover analog input mA/V
[17] X30/X41 OUT: Fieldbus
[18] X30/X40 IN: Fieldbus

C View from below
[19] X18: FS encoder connection
[20] X16: MOVILINK® DDI connection
[21] X10: Brake control and motor temperature monitoring
[22] X2: Motor and braking resistor connection
[23] EMC: Contact screw for TN/TT systems on the right side of the inverter

33955948/EN – 05/2026

8.1.5 Size 5

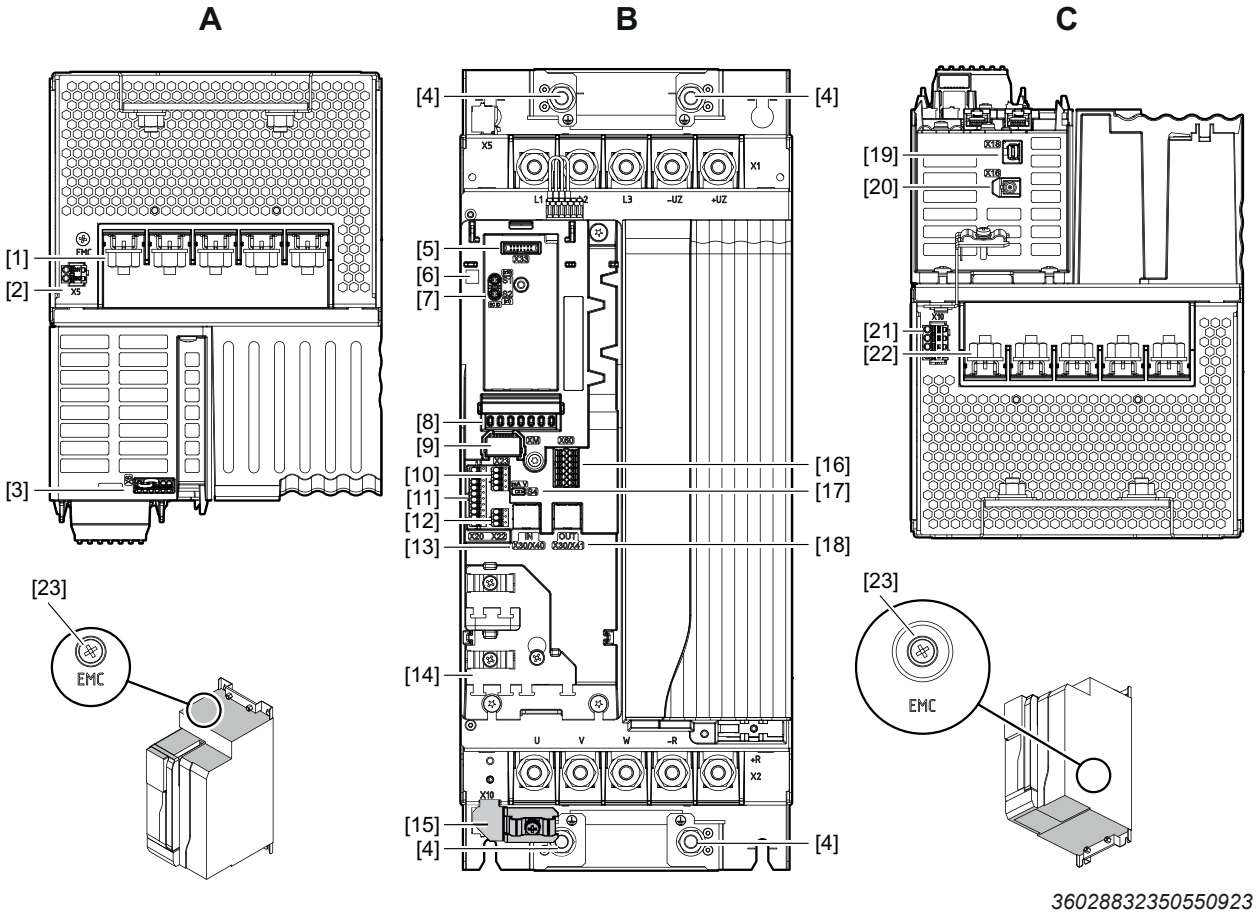

36028832350550923

A View from top
[1] X1: Supply system and DC link connection
[2] X5: 24 V supply voltage
[3] X6: Safe Torque Off (STO) connection

B View from front
[4] 4 × housing PE connection
[5] X33: Interface for CDM11A or CBG01A
[6] Product label with QR code
[7] S1/S2: EtherCAT® ID switch
[8] Status LEDs
[9] Memory module
[10] X23: Analog inputs or analog outputs
[11] X20: Digital inputs or digital outputs
[12] X22: Isolated relay contact
[13] Signal and control cable shield plate
[14] MOVILINK® DDI shield plate
[15] X60: safe digital inputs or digital outputs
[16] S4: Changeover analog input mA/V
[17] X30/X41 OUT: Fieldbus
[18] X30/X40 IN: Fieldbus

C View from below
[19] X18: FS encoder connection
[20] X16: MOVILINK® DDI connection
[21] X10: Brake control and motor temperature monitoring
[22] X2: Motor and braking resistor connection
[23] EMC: Contact screw for TN/TT systems on the top and another contact screw on the right side of the inverter

33955948/EN – 05/2026

8.1.6 Size 6

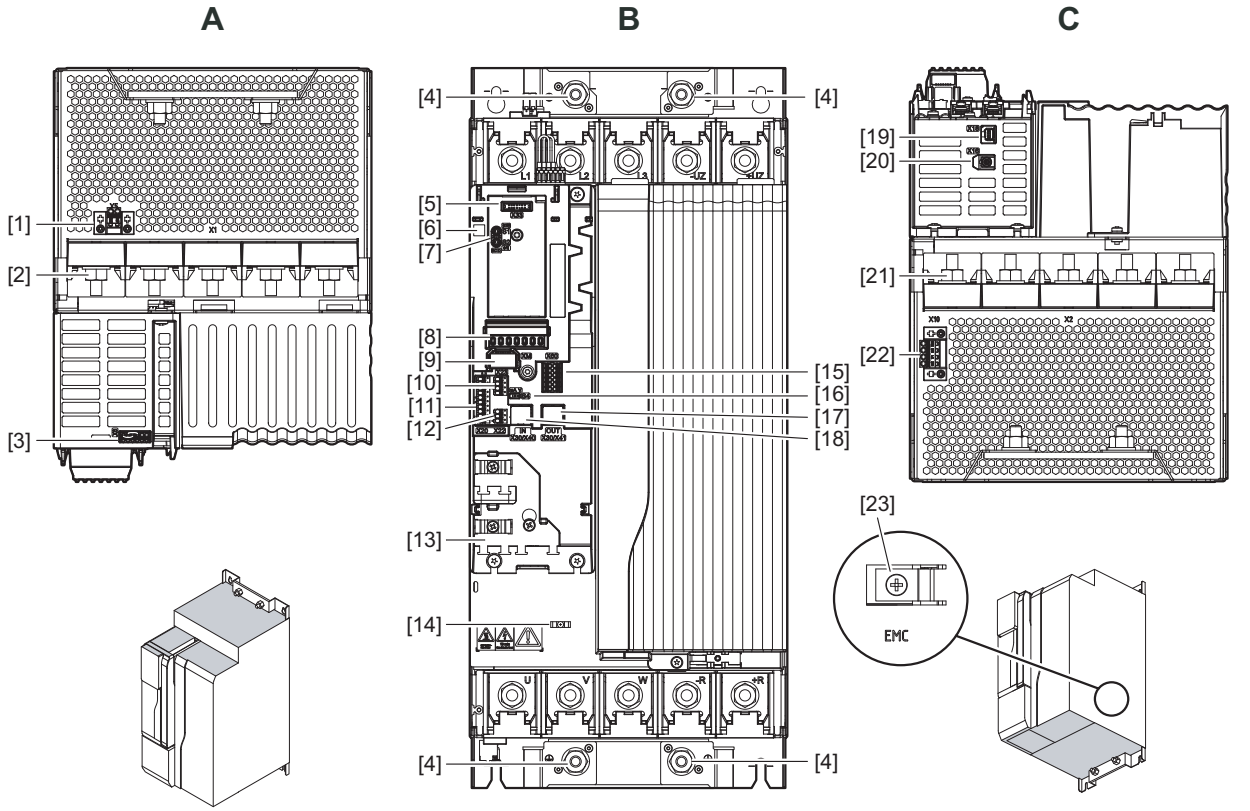
A
B
C
[1]
[2]
[3]
[4]
[5]
[6]
[7]
[8]
[9]
[10]
[11]
[12]
[13]
[14]
[15]
[16]
[17]
[18]
[19]
[20]
[21]
[22]
[23]
EMC
27021633095813259

A View from top
[1] X5: 24 V supply voltage
[2] X1: Supply system and DC link connection
[3] X6: Safe Torque Off (STO) connection

B View from front
[4] 4 × housing PE connection
[5] X33: Interface for CDM11A or CBG01A
[6] Product label with QR code
[7] S1/S2: EtherCAT® ID switch
[8] Status LEDs
[9] Memory module
[10] X23: Analog inputs or analog outputs
[11] X20: Digital inputs or digital outputs
[12] X22: Isolated relay contact
[13] Signal and control cable shield plate
[14] MOVILINK® DDI shield plate
[15] X60: safe digital inputs or digital outputs
[16] S4: Changeover analog input mA/V
[17] X30/X41 OUT: Fieldbus
[18] X30/X40 IN: Fieldbus

C View from below
[19] X18: FS encoder connection
[20] X16: MOVILINK® DDI connection
[21] X2: Motor and braking resistor connection
[22] X10: Brake control and motor temperature monitoring
[23] EMC: Contact screw for TN/TT systems on the right side of the inverter

33955948/EN – 05/2026

8.1.7 Size 7

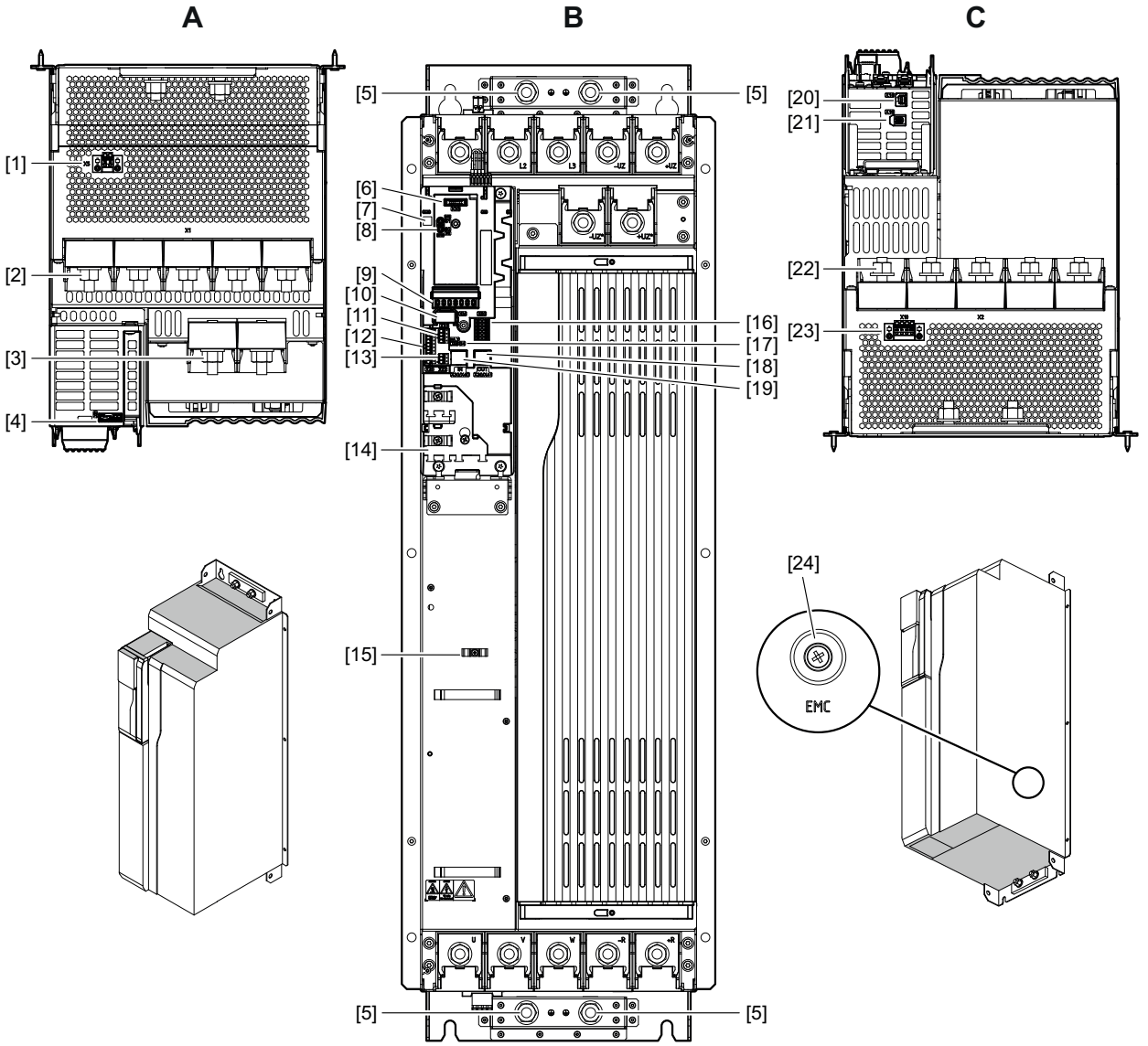

18014434735722379

A View from top

[1] X5: 24 V supply voltage
[2] X1: Supply system connection and $+U_Z$, $-U_Z$: DC link connection on rectifier side
[3] $+U_Z$*, $-U_Z$*: DC link connection capacitor side
[4] X6: Safe Torque Off (STO) connection

B View from front

[5] 4 × housing PE connection
[6] X33: Interface for CDM11A or CBG01A
[7] Product label with QR code
[8] S1/S2: EtherCAT® ID switch
[9] Status LEDs
[10] Memory module
[11] X23: Analog inputs or analog outputs
[12] X20: Digital inputs or digital outputs
[13] X22: Isolated relay contact
[14] Signal and control cable shield plate
[15] MOVILINK® DDI shield plate
[16] X60: safe digital inputs or digital outputs
[17] S4: Changeover analog input mA/V
[18] X30/X41 OUT: Fieldbus
[19] X30/X40 IN: Fieldbus

C View from below

[20] X18: FS encoder connection
[21] X16: MOVILINK® DDI connection
[22] X2: Motor and braking resistor connection
[23] X10: Brake control and motor temperature monitoring
[24] EMC: Contact screw for TN/TT systems on the right side of the inverter

33955948/EN – 05/2026

8.1.8 Size 8

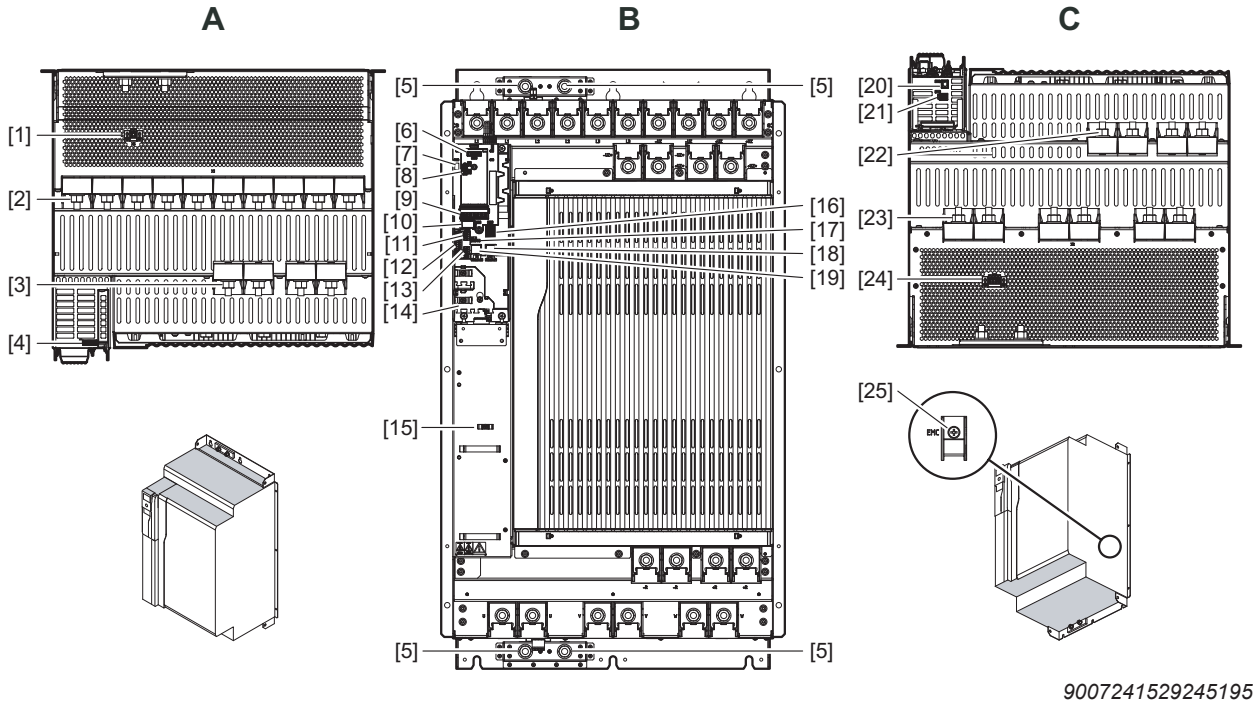

9007241529245195

A View from top

[1] X5: 24 V supply voltage
[2] X1: Supply system connection and $+U_Z$, $-U_Z$: DC link connection on rectifier side
[3] $+U_Z$*, $-U_Z$*: DC link connection capacitor side
[4] X6: Safe Torque Off (STO) connection

B View from front

[5] 4 × housing PE connection
[6] X33: Interface for CDM11A or CBG01A
[7] Product label with QR code
[8] S1/S2: EtherCAT® ID switch
[9] Status LEDs
[10] Memory module
[11] X23: Analog inputs or analog outputs
[12] X20: Digital inputs or digital outputs
[13] X22: Isolated relay contact
[14] Signal and control cable shield plate
[15] MOVILINK® DDI shield plate
[16] X60: safe digital inputs or digital outputs
[17] S4: Changeover analog input mA/V
[18] X30/X41 OUT: Fieldbus
[19] X30/X40 IN: Fieldbus

C View from below

[20] X18: FS encoder connection
[21] X16: MOVILINK® DDI connection
[22] Braking resistor connection
[23] X2: Motor connection
[24] X10: Brake control and motor temperature monitoring
[25] EMC: Contact screw for TN/TT systems on the right side of the inverter

33955948/EN – 05/2026

8.2 Nameplates

8.2.1 Nameplate positions

The following figure shows an example of the position of the nameplates and labels on the inverter:

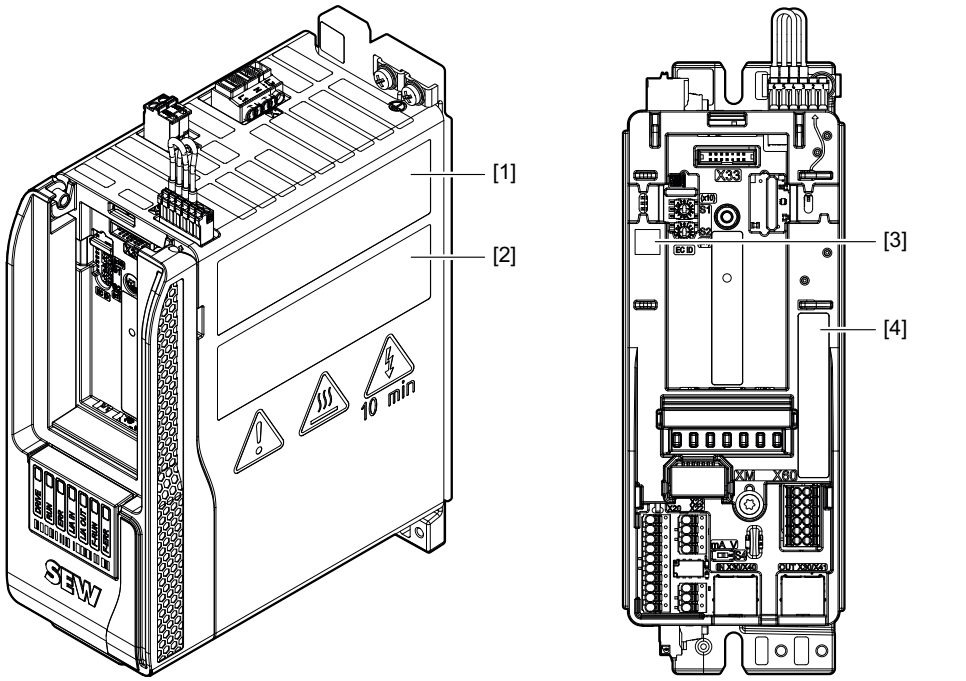

50610947595

[1] System nameplate
[2] Performance data nameplate
[3] Product label
[4] Brief nameplate

8.2.2 Example of short nameplate

Sizes 0S and 0L

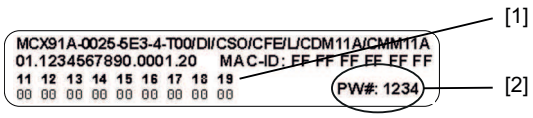

50623673739

[1] Device status
[2] Master password for MOVISAFE® CSB/CLS/CSS safety option

Size 3 – 8

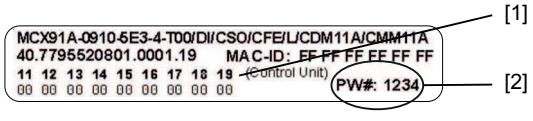

50623671307

[1] Device status
[2] Master password for MOVISAFE® CSB/CLS/CSS safety option

8.2.3 Example of a system nameplate

Sizes 0S and 0L

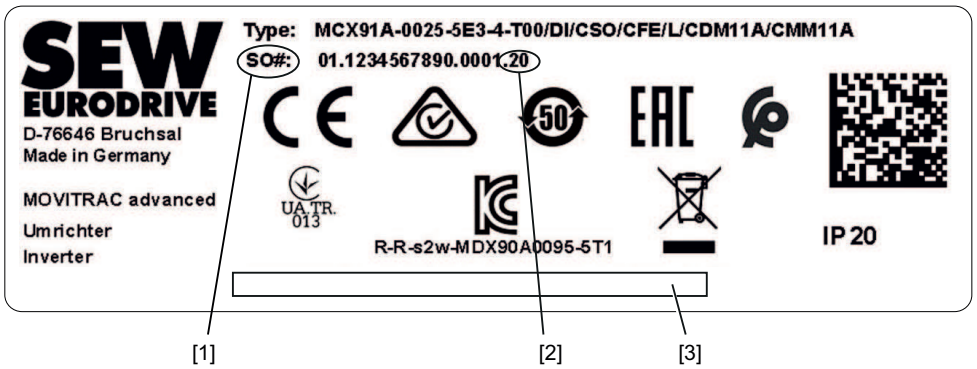

27021630868606987

[1] Serial number
[2] Year of manufacture as part of the serial number. Example: 20 → year of manufacture 2020
[3] Free text line, see **product manual** > "Product Description" > "Technologies" > "Customizing" chapter

Size 3 – 8

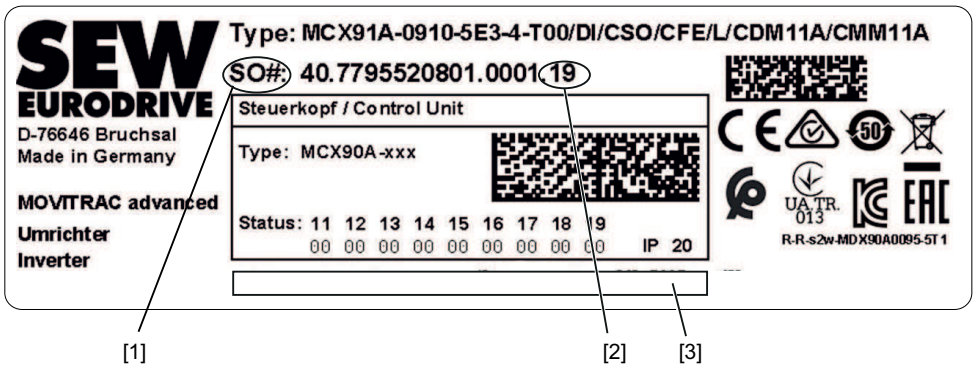

27021630868611851

[1] Serial number
[2] Year of manufacture as part of the serial number. Example: 19 → year of manufacture 2019
[3] Free text line, see **product manual** > "Product Description" > "Technologies" > "Customizing" chapter

33955948/EN – 05/2026

8.2.4 Example of a performance data nameplate

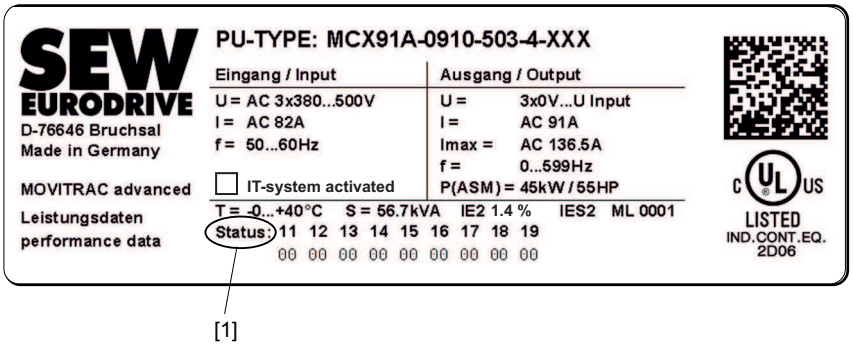

27021630868609419

[1] Device status

8.2.5 Product label

	Product label with QR code. The QR code can be scanned. You will be redirected to the Digital Services of SEW-EURODRIVE. There, you have access to product-specific data, documents, and further services. **The product manual of the device with further information is available in the "Documentation" > "Data and documents" area.**

8.3 Type designation

Example: MCX91A-0125-5E3-4-T00	
MC	**Product family** MOVITRAC®
X	**Device type** X = Single-axis inverter
91	**Series** 91 = With DC 24 V switched-mode power supply
A	**Version** A = Version status of the device series
0125	**Performance class** 0125 = Nominal output current, e.g. 0125 = 12.5 A
5	**Connection voltage** 2 = AC 200 – 240 V 5 = AC 380 – 500 V
E	**Power section variant EMC** 0 = Basic interference suppression integrated E = EMC filter limit value category C2 in accordance with EN 61800-3

33955948/EN – 05/2026

Example: MCX91A-0125-5E3-4-T00	
3	**Connection type** 1 = 1-phase connection type 3 = 3-phase connection type
4	**Operating mode** 4 = 4-quadrant operation
T	**Device variant** 0 = Standard (without process data interface) S = EtherCAT®/SBus^{PLUS} T = Control via fieldbus E = EtherCAT®/CiA402 device profile L = Ethernet POWERLINK/CiA402 device profile
0	**Technology level** 0 = Standard design
0	**Application level** 0 = Application level 0 (required for e.g. MOVIKIT® Velocity Drive) 1 = Application level 1 (required for e.g. MOVIKIT® Positioning Drive) 2 = Application level 2 (required for customer-specific solutions)
/000	**MOVIKIT®** 000 = Standard FCB control 001 = MOVIKIT® Velocity Drive (loaded at the factory) ...
	Unit designs /DI = MOVILINK® DDI /CSO = STO PL d, actuation via input /CSB = STO PL d, control via safe communication /CSL = SBC, SLS, control via safe communication /CSS = SBC, SLS, control via safe communication /CFN = PROFINET communication variant /CFE = EtherNet/IP™ and Modbus TCP communications variant /CFL = POWERLINK communications variant /L = Design with painted printed circuit boards /P = Parameters ex-works
	Options /CMM = Memory module /CDM = Diagnostic module

33955948/EN – 05/2026

9 Mechanical installation

9.1 Installation notes

In accordance with the degree of protection, the device is intended exclusively for installation in a control cabinet.

Observe the following information:

- Only install the device on a level, low-vibration, and torsionally rigid support structure.
- Observe the weight of the device and the permissible tightening torques of the fasteners.
- Check the validity of the degree of protection using the information in the operating instructions and the data on the nameplate.
- Make sure that the cooling air supply is unobstructed; warm exhaust air from other devices must not influence the cooling.

9.2 Installation requirements

Check that the following conditions have been met:

- The device is undamaged (no damage caused by transport or storage).
- The ambient temperature corresponds to the specification in the operating instructions and the nameplate.

Refer to the ambient conditions in the **Product manual** > chapter "Technical data" (→ 🗎 44).

9.3 Minimum clearance and mounting position

Observe the following information:

- To ensure unobstructed cooling, leave a minimum clearance of 100 mm above and below the inverter housings. Ensure that the air circulation in this clearance is not impaired by cables or other installation equipment.
- Make sure that the inverters are not exposed to the exhaust air from other units.
- Only install the inverters vertically. Do not install them horizontally, tilted, or upside down.
- A lateral clearance of at least 100 mm is only required for size 8. All other devices may be placed directly next to each other.

INFORMATION

Special bending spaces are required according to EN 61800-5-1 for cables with a cross section of 10 mm^2 and larger. Increase the size of the spaces if necessary.

33955948/EN – 05/2026

9.4 Preparing the control cabinet back panel

Proceed as follows:

1. Drill the holes according to the following drilling diagram.
2. Cut the internal thread in the holes according to the screw size used.

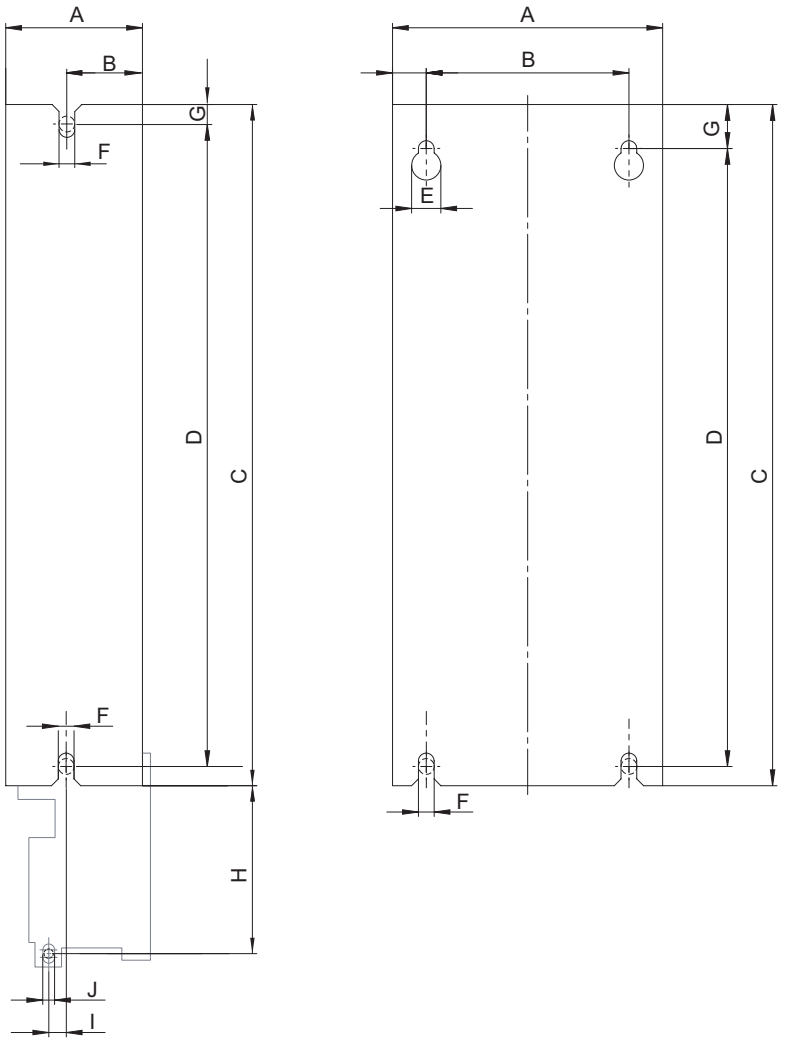

9007230158965771

Hole pattern 1 **Hole pattern 2**

Inverter	Dimensions of the device base plate in mm										Drilling diagram
	A	B	C	D	E	F	G	I	J	H	
Size 0S	80	40	220	200 (min. 196)	12	6	10	5.5	8	78	1
Size 0L	80	40	309	288 (min. 284.5)	12	6	10	5.5	8	78	

33955948/EN – 05/2026

Inverter	Dimensions of the device base plate in mm										Drilling diagram
	A	B	C	D	E	F	G	I	J	H	
Size 3	105	80	350	325	12	6	18	–	–	–	2
Size 4	135	80	350	325	12	6	18	–	–	–	
Size 5	196	160	471	440	13	7	18	–	–	–	
Size 6	240	200	544	510	13	7	18	–	–	–	
Size 7	320	220	990	950	23	11	25	–	–	–	
Size 8	518	450	990	950	23	11	25	–	–	–	

9.5 Installing inverter sizes 0S and 0L

Proceed as follows:

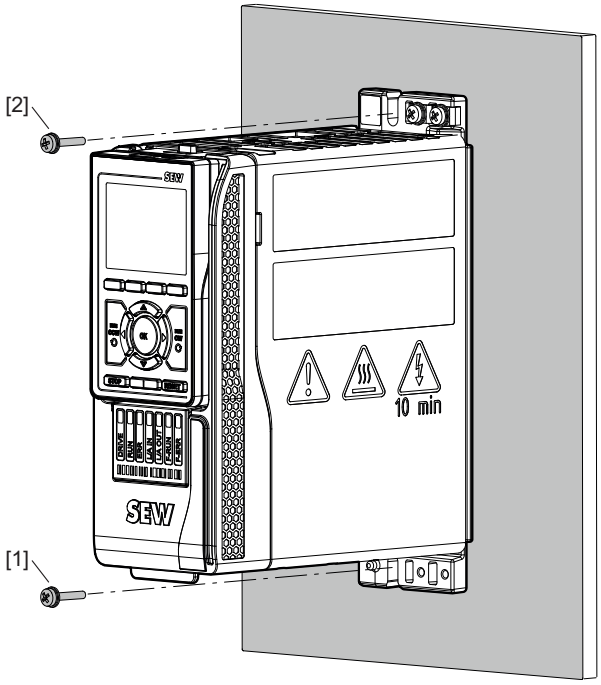

42881416587

The retaining screw [1] is screwed into the prepared tapped hole in the mounting plate in the control cabinet but is not tightened.

1. Place the inverter with the slotted hole in the device base plate onto the retaining screw [1] from the top.
2. Push the inverter backwards to insert the retaining screw [2] into the upper hole in the device base plate and the tapped hole in the mounting plate.
3. Tighten the retaining screws [1] and [2].

To disassemble the inverter, perform the assembly steps in reverse order.

9.6 Installing inverter sizes 3 – 8

Proceed as follows:

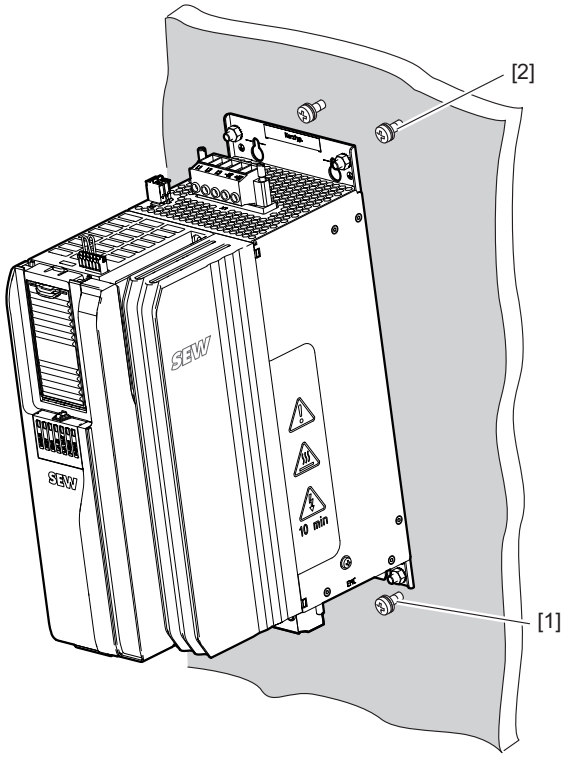

42878086795

The retaining screws [1] and [2] are screwed into the prepared tapped holes in the mounting plate in the control cabinet but are not tightened.

1. Place the inverter with the slotted holes in the device base plate onto the retaining screws [1] from the top.
2. Push the inverter backwards to insert the retaining screws [2] into the upper holes in the device base plate.
3. Lower the inverter.
4. Tighten the retaining screws [1] and [2].

33955948/EN – 05/2026

9.7 Installing the shield plate

The shield plate for motor cables, brake cables, and braking resistor cables is included in the scope of delivery for inverters of sizes 0S, 0L, 3 and 4.

For size 5 – 8 inverters, use commercially available shield plates to shield the motor cables, brake cables, and braking resistor cables. Apply the shielding as closely as possible to the inverter.

9.7.1 Installing shield plate for sizes 0S and 0L

Proceed as follows:

The shield plate enables installation of the cables for motor, brakes and braking resistors as well as the control and signal cables.

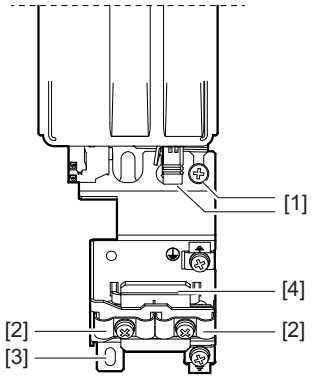

36028830614288011

[1] Retaining screws for shield plate
[2] Shield terminals for control and signal cables
[3] Additional fastening option for shield plate
[4] Shielding bracket for motor cable

1. Hold the shield plate at the lower edge of the base plate of the inverter.
2. Tighten the retaining screws [1].

33955948/EN – 05/2026

9.7.2 Installing the CLH21A shield plate extension for sizes 0S and 0L

The CLH21A shield plate extension (mounting rail on a standard shield plate) is used to mount additional terminal blocks or modules on the inverter shield plate. The brake rectifier from SEW-EURODRIVE or a multi-level terminal block, for example, can be attached to the CLH21A shield plate extension. This offers the following benefits:

- No additional hat rail required for terminal blocks or modules.
- No additional control cabinet space required, as direct stacking of inverters is still possible.
- Easy wiring of terminal blocks or modules thanks to optimal cable routing.

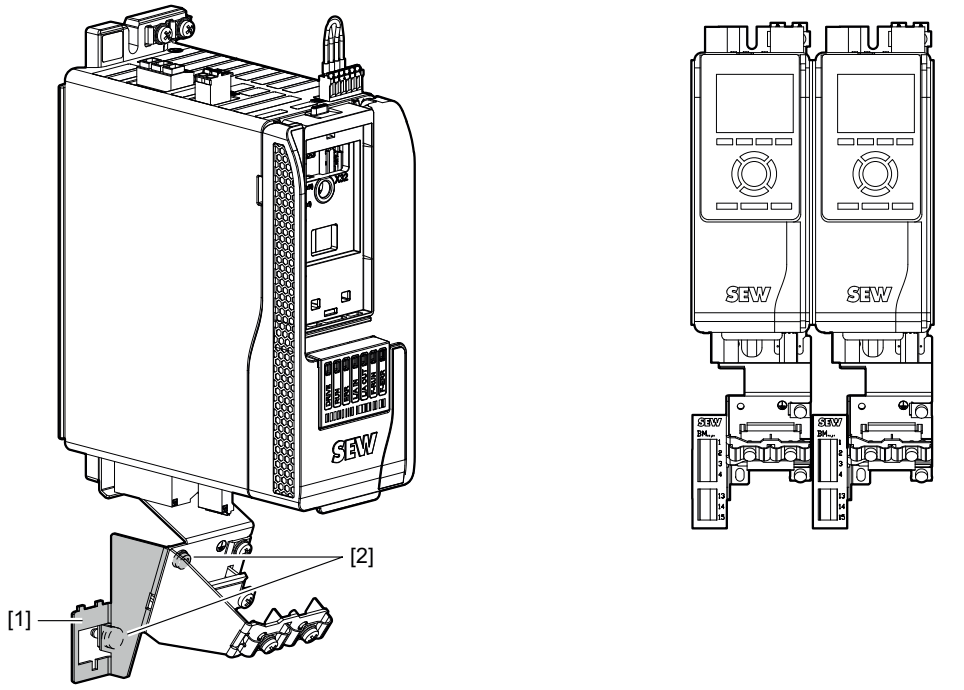

18014434411886603

[1] Shield plate extension
[2] Retaining screw

Proceed as follows:

1. Guide the shield plate extension [1] to the shield plate from behind.
2. Tighten the retaining screw [2].

33955948/EN – 05/2026

9.7.3 Installing shield plate for sizes 3 and 4

Proceed as follows:

The shield plate allows installation for motor, brake and braking resistor cables.

The retaining screws [1] and [2] are screwed into the prepared tapped holes in the mounting plate in the control cabinet but are not tightened.

1. Place the inverter with the slotted holes in the device base plate onto the retaining screws [1] from the top.

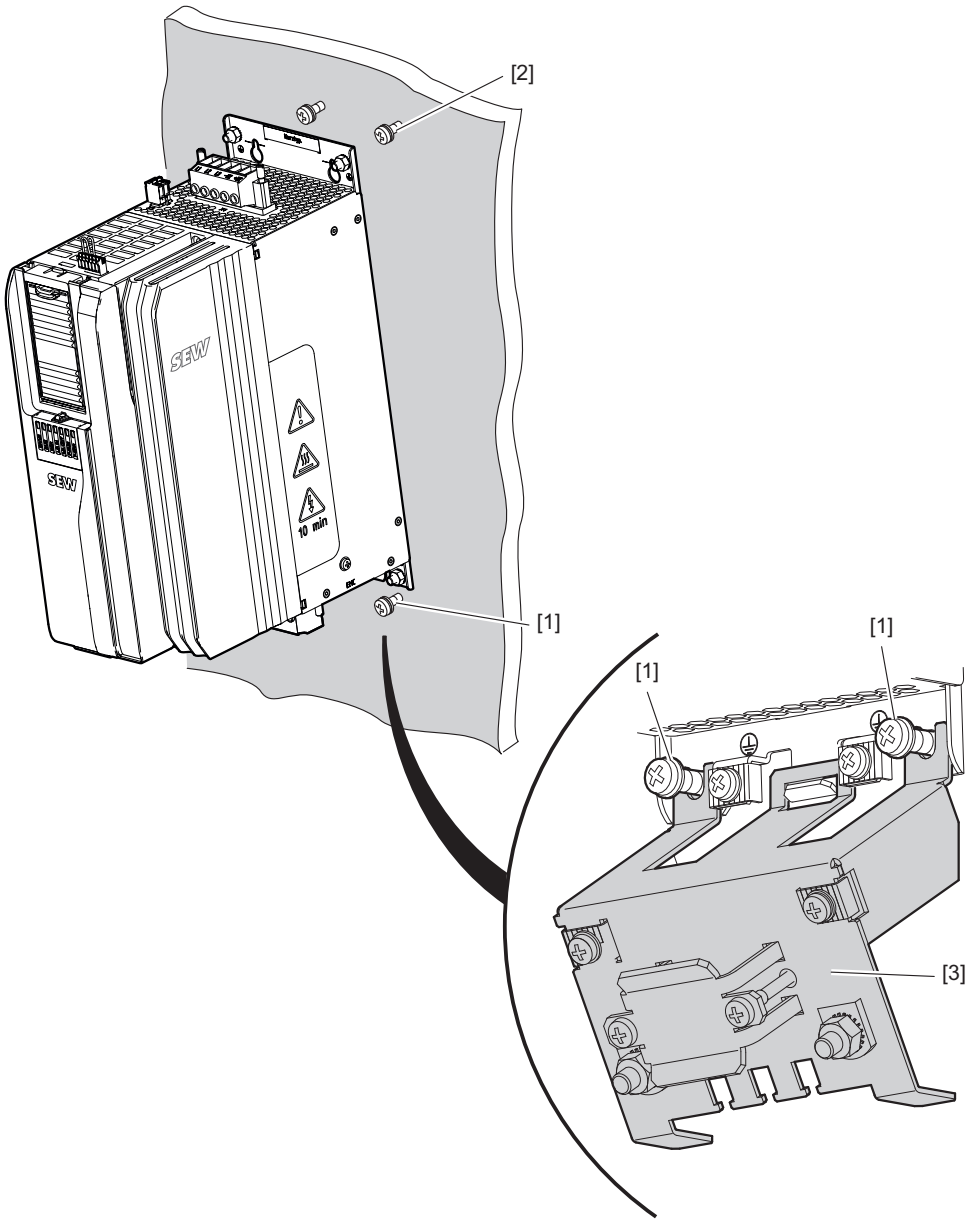

32659176459

2. Push the inverter backwards to insert the retaining screws [2] into the upper holes in the device base plate.
3. Lower the inverter.
4. Install the shield plate [3] as shown above.
5. Tighten the retaining screws [1] and [2].

9.7.4 Connecting the shielding for sizes 5 – 8

No shield terminals for the power section are supplied with sizes 5 – 8.

- Use commercially available shield terminals to connect the shielding of the motor, brake, and braking resistor cables.
- Connect the shielding as close to the inverter as possible.

9.7.5 Installing the shield plate for MOVILINK® DDI

Proceed as follows:

A shield plate is supplied as standard for MOVILINK® DDI from size 5 and larger. The shield plate is not yet installed on the unit.

1. Insert the shield plate [2] so that you can fasten it with the screw [1] in the position [3] shown.

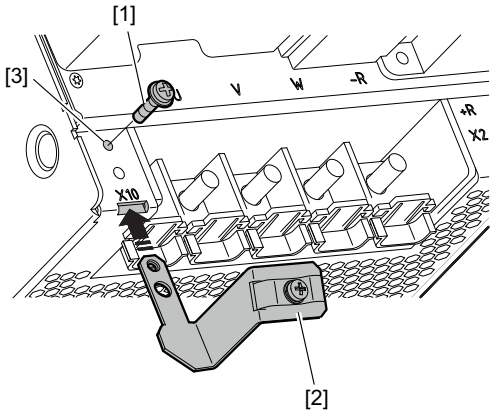

18014432994211979

9.8 Removing and attaching the safety cover

The inverter is equipped with a safety cover [1].

Removing the safety cover

Proceed as follows:

33955948/EN – 05/2026

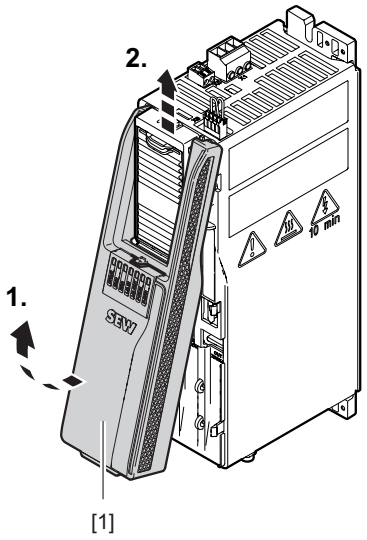

9007231886077451

1. The safety cover [1] has a latching mechanism at the bottom. To release the latching mechanism, pull the lower end of the safety cover away from the inverter.
2. Pivot the safety cover forward and lift it up and out of the mounting.

INFORMATION

Always mount the safety cover after performing installation work.

Mounting the safety cover

Proceed as follows:

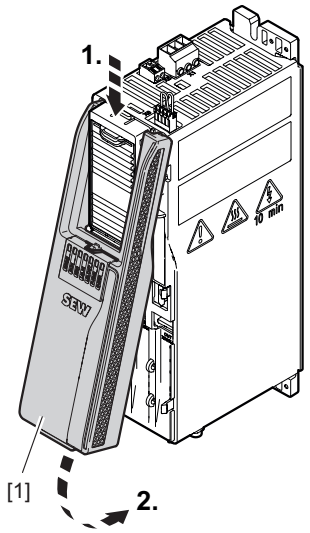

9007231886079883

1. Place the safety cover [1] into the upper mounting.
2. Pivot the safety cover toward the inverter until it latches.

9.9 Removing and reinstalling the touch guards

For inverters of size 5 and higher, touch guards must be removed for the line and DC link connection and the connection of the motor and braking resistor, and then reinstalled afterward.

When removing the touch guards, first remove the cover. When mounting the touch guards, attach the cover afterwards. Otherwise, the touch guards can be disassembled and assembled in any order.

Observe chapter "Permitted tightening torques" (→ 🗎 327).

9.9.1 Size 5

The following figure shows an example of the touch guards of the inverter:

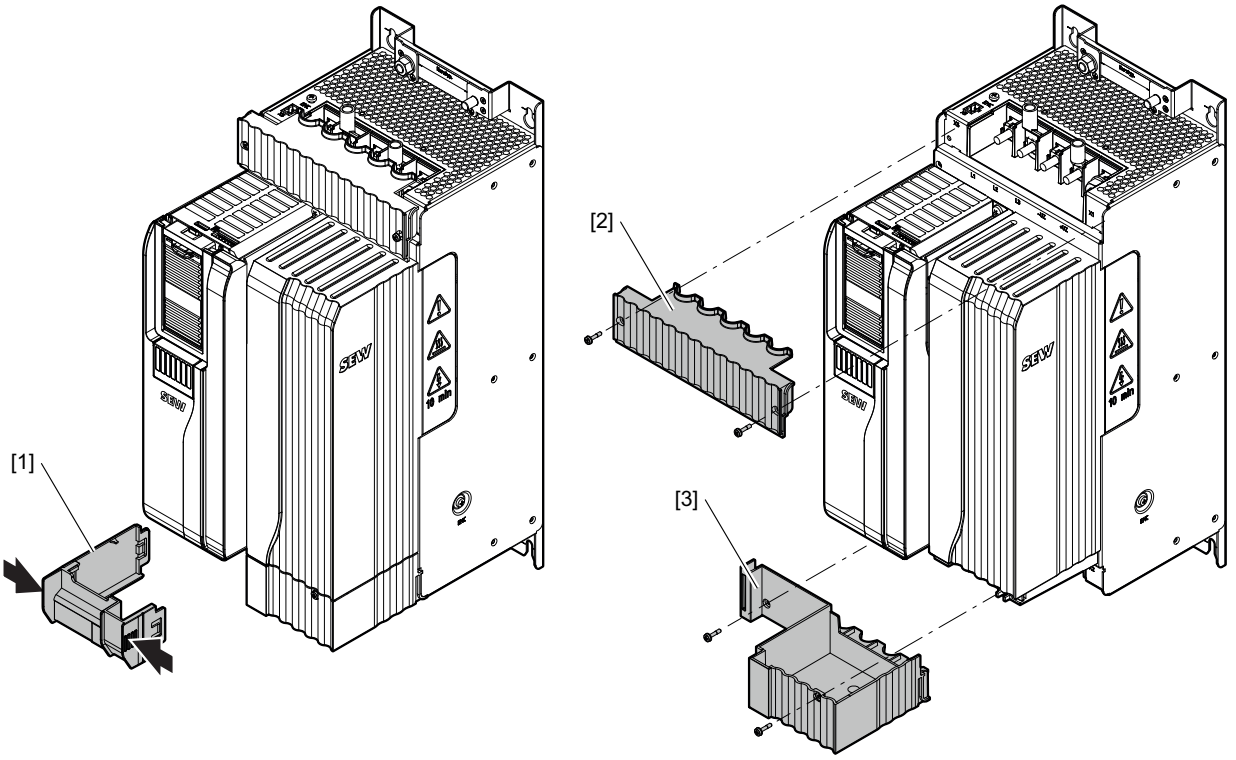

42739236491

[1] Cover
[2] Touch guard for connection of supply system and DC link
[3] Touch guard for connection of motor and braking resistor

33955948/EN – 05/2026

9.9.2 Size 6

The following figure shows an example of the touch guards of the inverter:

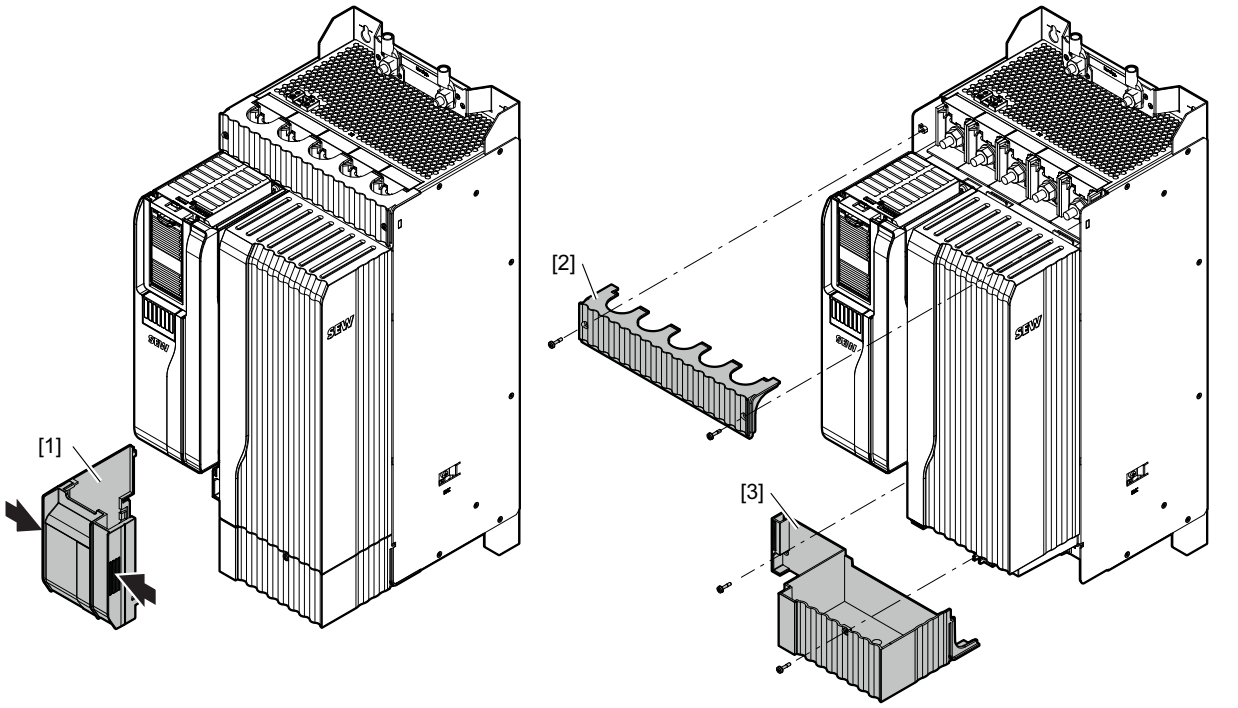

42739239691

[1] Cover
[2] Touch guard for connection of supply system and DC link
[3] Touch guard for connection of motor and braking resistor

33955948/EN – 05/2026

9.9.3 Size 7

The following figure shows an example of the touch guards of the inverter:

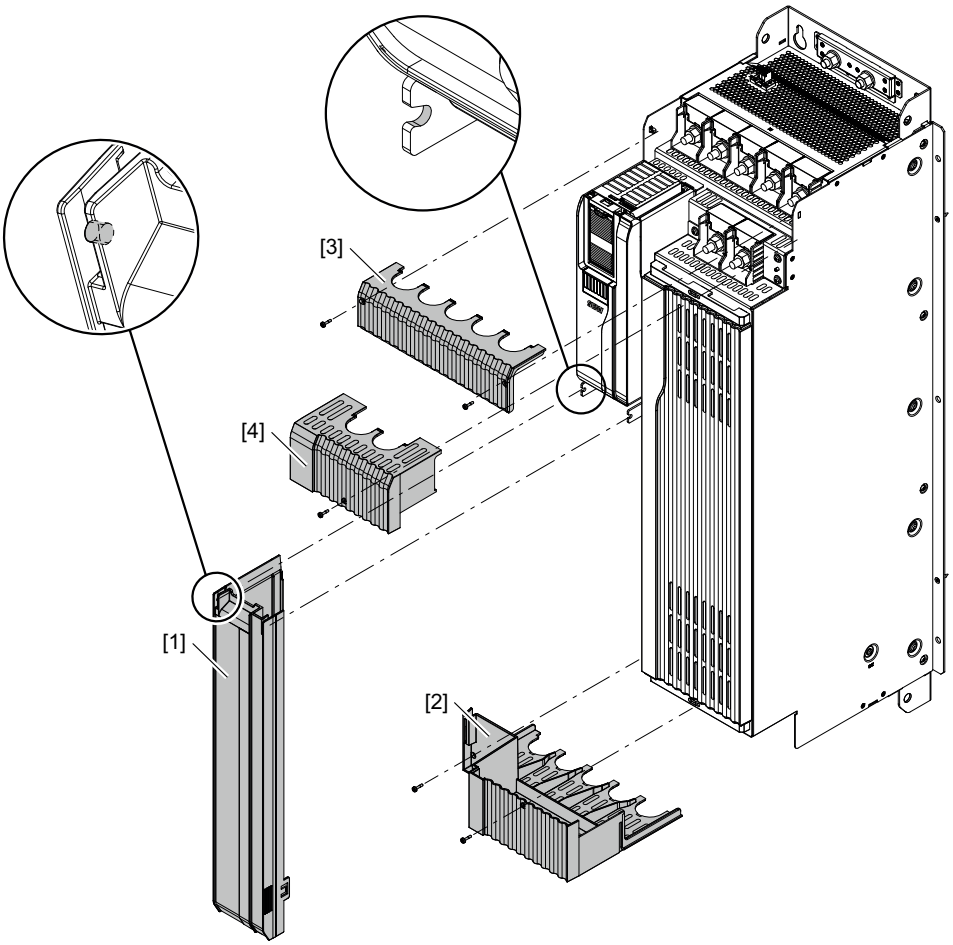

42739243147

[1] Cover
[2] Touch guard for connection of motor and braking resistor
[3] Touch guard for connection of supply system and DC link
[4] Touch guard for connection of DC link before DC link choke

33955948/EN – 05/2026

9.9.4 Size 8

The following figure shows an example of the touch guards of the inverter:

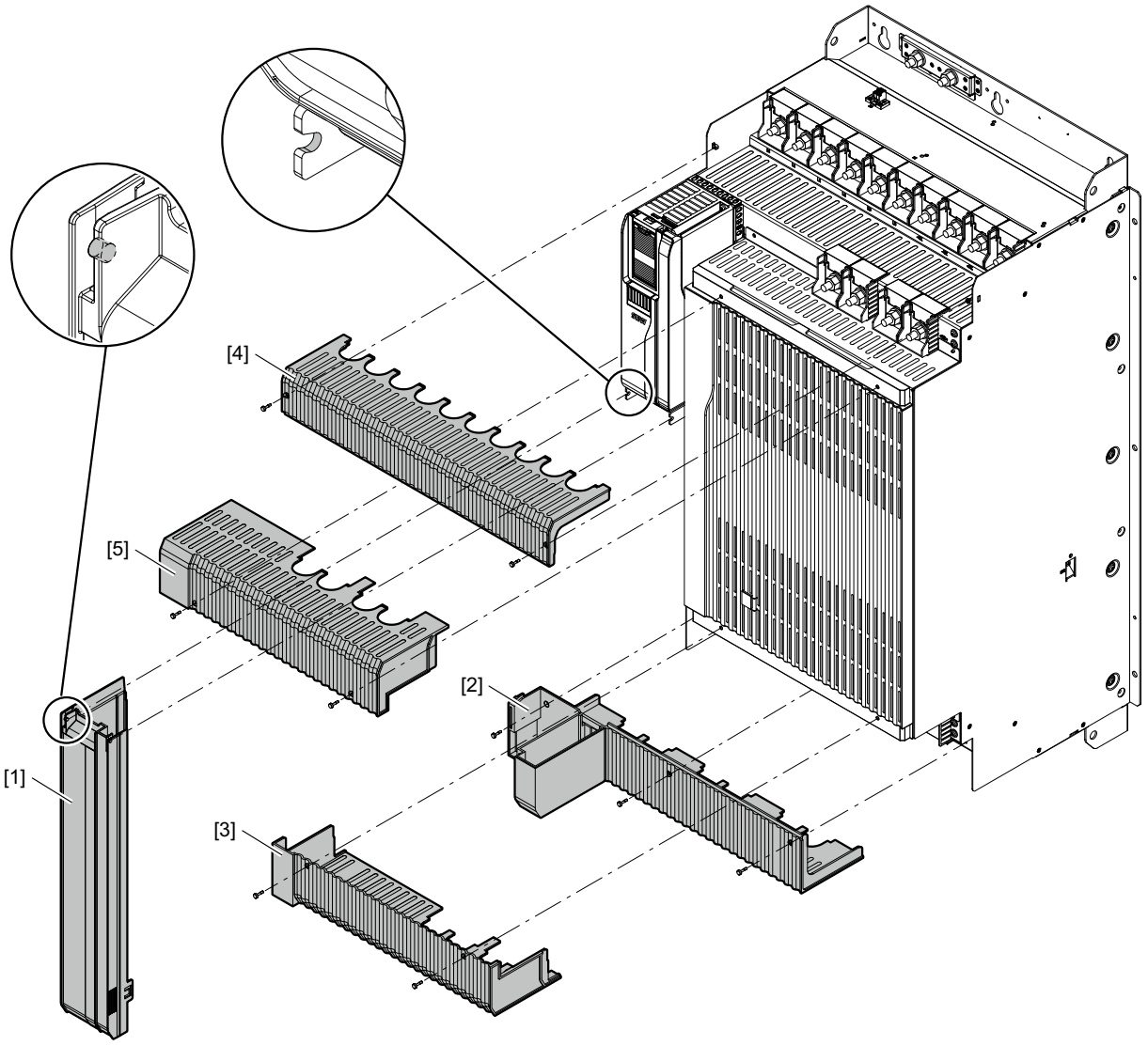

42748066699

[1] Cover
[2] Touch guard for connection of motor and braking resistor, part 1
[3] Touch guard for connection of motor and braking resistor, part 2
[4] Touch guard for connection of supply system and DC link
[5] Touch guard for connection of DC link before DC link choke

33955948/EN – 05/2026

9.10 Installing braking resistors

The surfaces of the braking resistors will reach temperatures of up to 250 °C when the braking resistors are subjected to the nominal power. The installation location of the braking resistor must be designed to accommodate the high temperatures. For this reason, the braking resistors are usually mounted outside the control cabinet. Non-permissible installation might lead to heat build-up in the braking resistor due to reduced convection. A tripping temperature contact or an overheated braking resistor can lead to a system standstill.

9.10.1 Minimum distances

Depending on the continuous braking power and the mounting position, observe the following minimum clearances:

Continuous braking power at 100% cdf	Mounting position	Lateral distance in mm	Distance below in mm	Distance above in mm
up to 1 kW	horizontal[1)]	200	0	350
	vertical[2)]	150	250	300
up to 10 kW	horizontal[1)]	300	0	650
	vertical[2)]	250	350	600
up to 22 kW	horizontal[1)]	400	0	750
	vertical[2)]	350	400	700
up to 44 kW	horizontal[1)]	500	0	850
	vertical[2)]	Not permitted	Not permitted	Not permitted

1) Corresponds to mounting positions 1, 2, 5, 6 (identical to mounting position 2).
2) Corresponds to mounting position 3, 4.

33955948/EN – 05/2026

9.10.2 Permitted mounting positions

The following table shows the permitted mounting positions of the braking resistors:

Grid resistor, frame resistor	Wire resistor	Flat type resistor
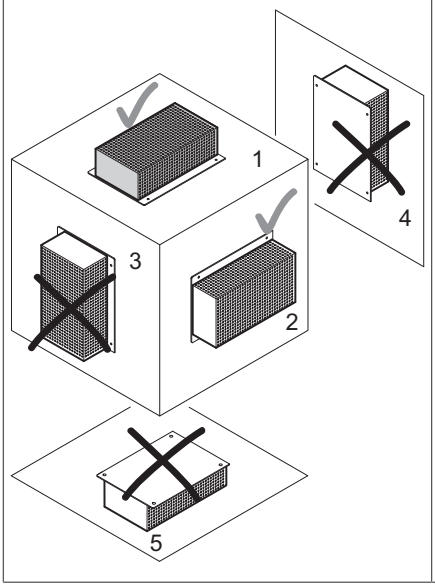	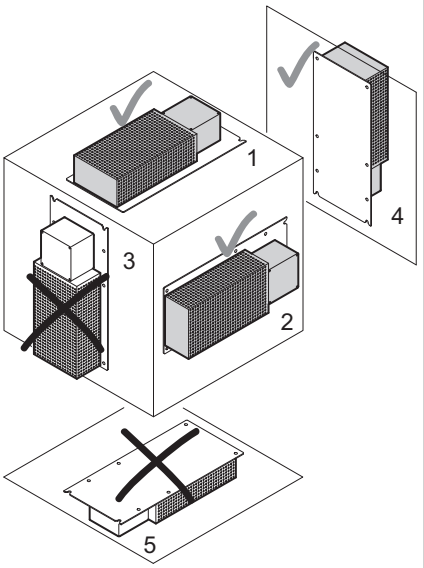	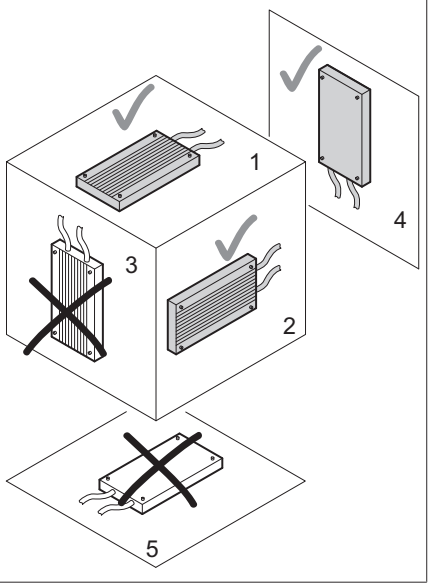

The BW003-420-T and BW1.0-170 braking resistors may only be used in position 1.

9.10.3 Installing BW120-001 and BW100-002/M braking resistors

Observe the following information:

- The installation of the braking resistors is only carried out in an upright position next to an inverter.
- The minimum lateral distance from adjacent components and walls can be reduced to 10 mm, contrary to the generally permissible mounting of braking resistors.
- The minimum distance from components or ceilings above can be reduced to 100 mm, contrary to the generally permissible mounting of braking resistors.

33955948/EN – 05/2026

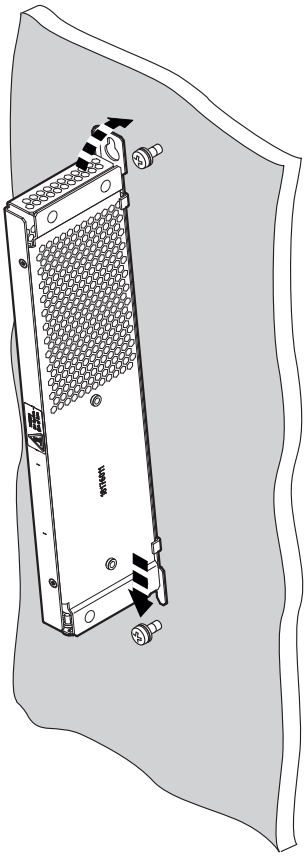

9007219618144779

9.10.4 Installing flatpack resistors without a support plate

Observe the following information:

- Use the spacer bolts included in the scope of delivery for installation.
- The spacer bolts must ensure a distance between the braking resistor and the mounting plate.

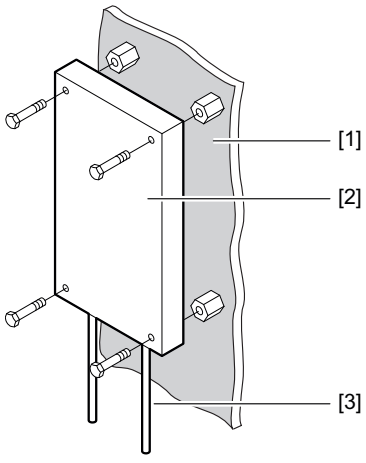

9007251005353611

[1] Mounting plate/mounting surface
[2] Braking resistor
[3] Connection wires for braking resistor

33955948/EN – 05/2026

9.10.5 Installing braking resistors with CLH31A and CLH41A support plate

Observe the following information:

- During mounting, make sure no connection wires are pinched.
- Use the fastening bolts included in the scope of delivery to mount the inverter and the support plate in the control cabinet.
- Refer to the dimension drawings for the drilling positions of the fastening bolts.

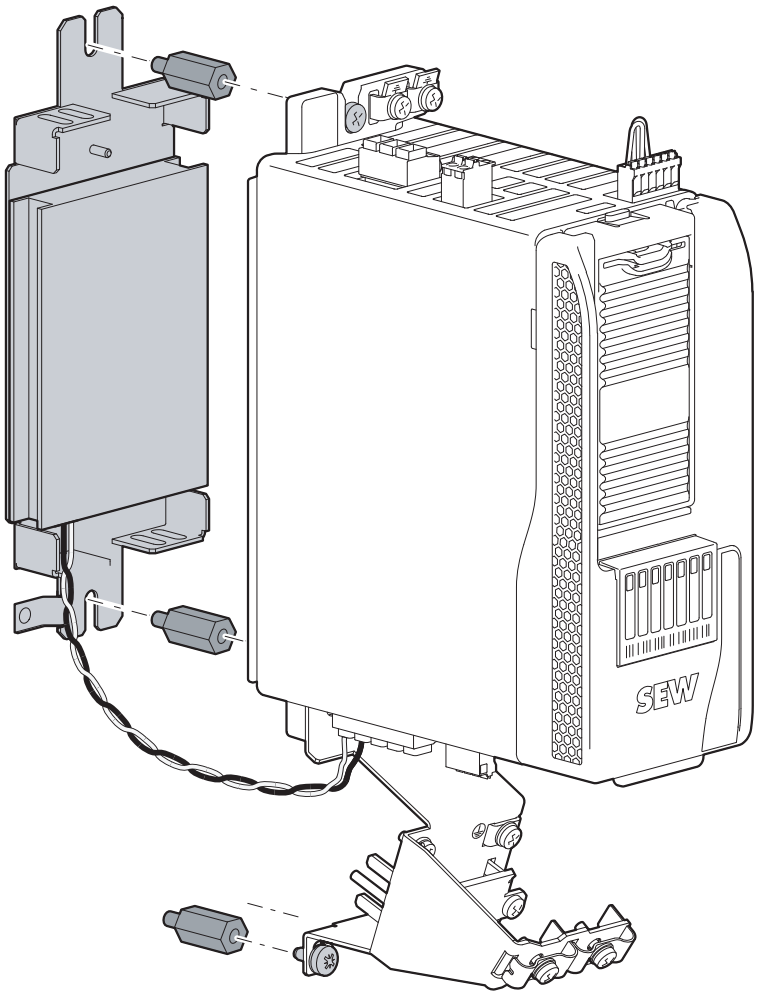

18014440832807563

33955948/EN – 05/2026

9.10.6 Installing braking resistors with CLH51A and CLH61A support plate

Observe the following information:

- During mounting, make sure no connection wires are pinched.
- Use the fastening bolts included in the scope of delivery to mount the inverter and the support plate in the control cabinet.
- Refer to the dimension drawings for the drilling positions of the fastening bolts.

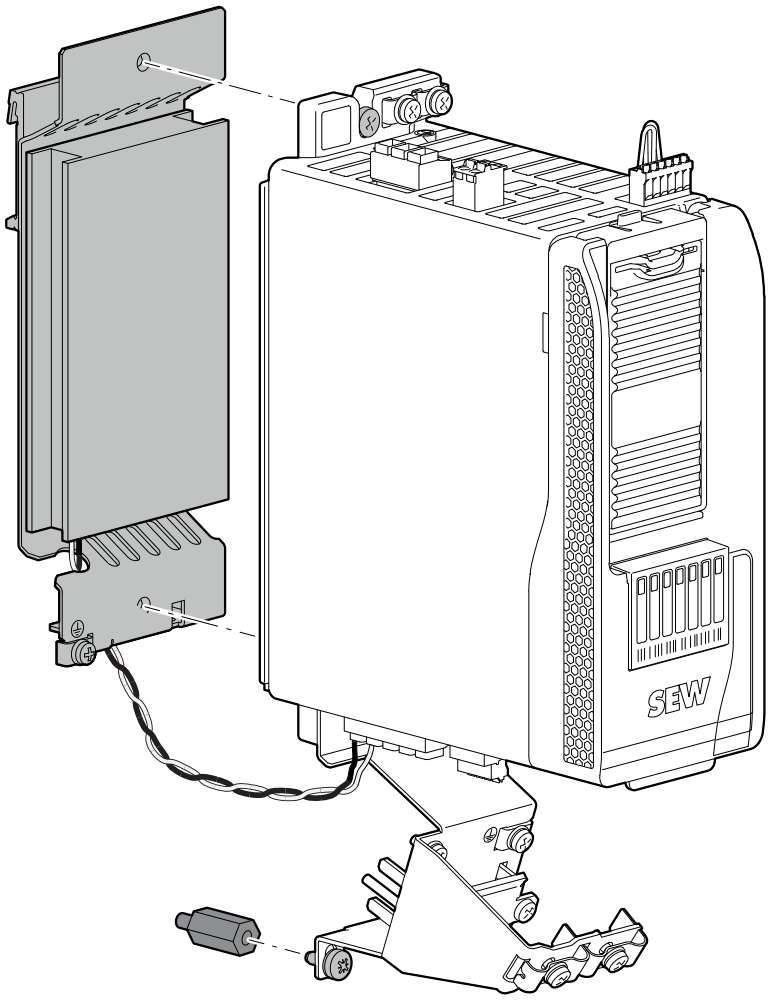

9007241578071435

33955948/EN – 05/2026

9.11 Installing line choke

Observe the following information:

- Install the choke close to the inverter but outside the minimum clearance for cooling. The choke must not be heated up by the exhaust air of the inverter.
- Install the choke at the positions shown in the connection diagrams, see chapter "Connection diagrams" (→ 🗎 369).
- Observe the following minimum distances and mounting positions for convection cooling:

Permitted mounting position	Distance in mm		
	On the side	Downwards	Upwards
1, 2, 3, 4	0	100	100

- Observe the following permitted mounting positions during installation:

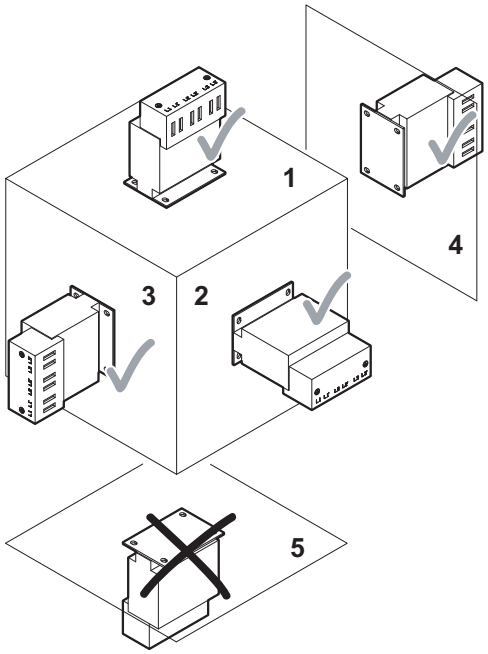

49906004235

9.12 Installing the line filter

Observe the following information:

- Install the line filter close to the inverter but outside the minimum clearance for cooling. The line filter must not be heated by the exhaust air of the application inverter.
- Mount the line filter and inverter on a shared mounting plate. Make sure they are connected over as large an area as possible and with good conductivity.
- Observe the following minimum distances and mounting positions for convection cooling:

Permitted mounting position	Distance in mm		
	On the side	Downward	Upward
3 and 4	0	100	100

- Observe the following permitted mounting positions during installation:

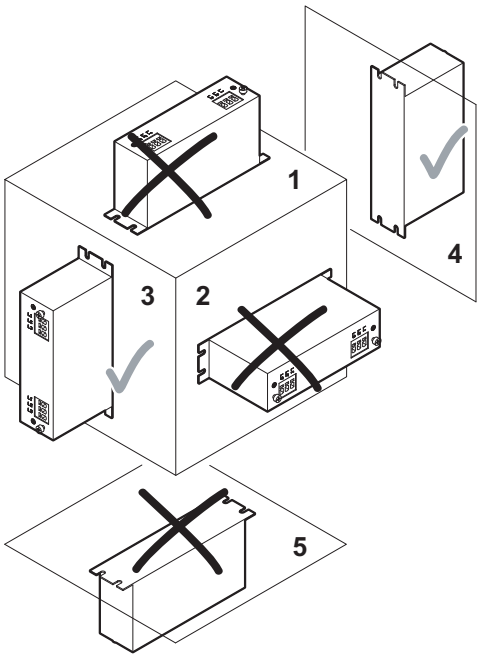

49742030347

9.13 Mounting the output filter

Observe the following information:

- Install the output filter close to the inverter but outside the minimum clearance for cooling. The exhaust air from the output filter must not heat the supply air to the inverter.
- Mount the output filter and inverter on a shared mounting plate. Make sure they are connected over as large an area as possible and with good conductivity.
- Observe the following minimum distances and mounting positions for convection cooling:

Permitted mounting position	Distance in mm		
	On the side	Downward	Upward
3 and 4	0	100	100

- Observe the following permitted mounting positions during installation:

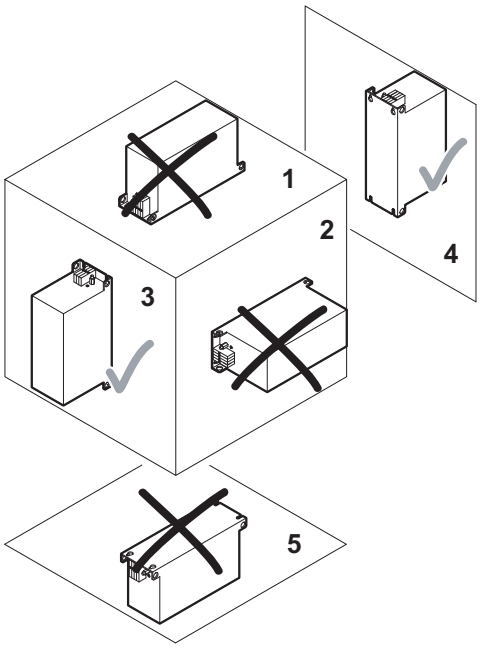

49906001291

9.14 Mounting the output choke

Observe the following information:

- Install the output choke close to the inverter but outside the minimum clearance for cooling. The exhaust air of the output choke must not heat the supply air of the inverter.
- Mount the output choke and inverter on a shared mounting plate. Make sure they are connected over as large an area as possible and with good conductivity.
- Observe the following minimum distances and mounting positions for convection cooling:

Permitted mounting position	Distance in mm		
	On the side	Downward	Upward
3 and 4	0	100	100

- Observe the following permitted mounting positions during installation:

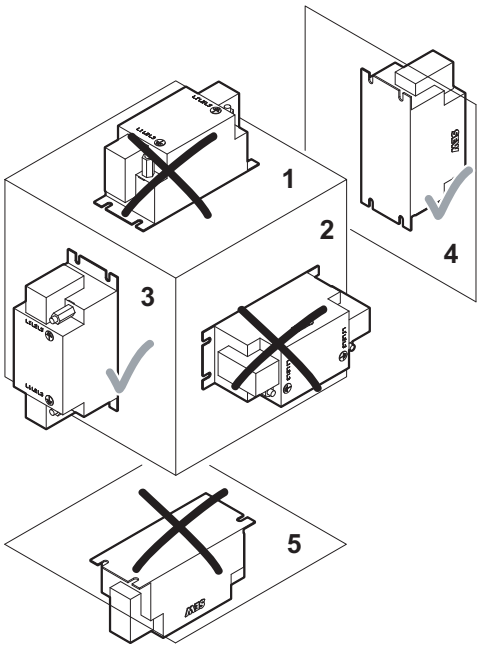

49905998347

33955948/EN – 05/2026

9.15 Mounting the keypad

The following procedure shows the mounting of the keypads using the CBG21A keypad as an example.

9.15.1 Attaching the keypad

Proceed as follows:

1. Place the keypad in the lower recess on the front [1]. Make sure that the retaining lugs are seated in the recesses on the inverter.
2. Push the top of the keypad toward the inverter [2] until it audibly clicks into place.

⇨ As soon as the connection to the inverter is established, the start menu is displayed.

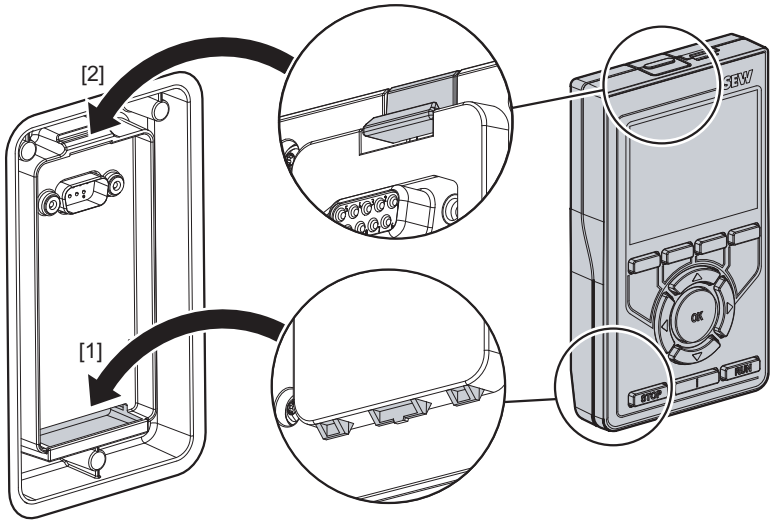

49740573579

33955948/EN – 05/2026

9.15.2 Removing the keypad

Proceed as follows:

1. Press and hold the red unlatch button [1] of the keypad downwards.
2. Tilt the top of the keypad forward.
3. Remove the keypad from the recess on the front.

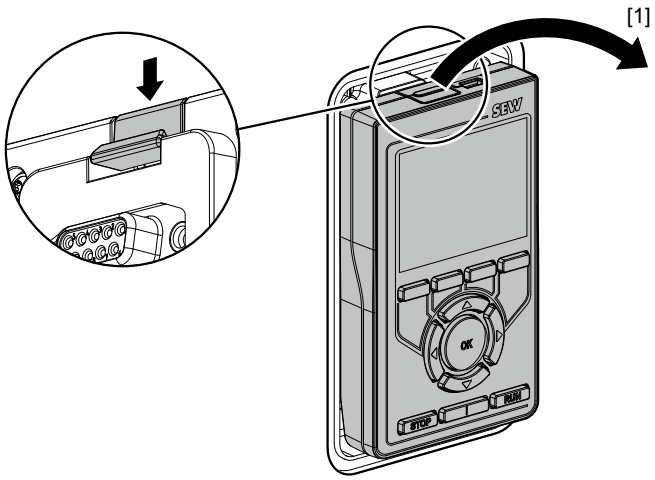

49740571147

9.16 Mounting the COG11A door mounting frame

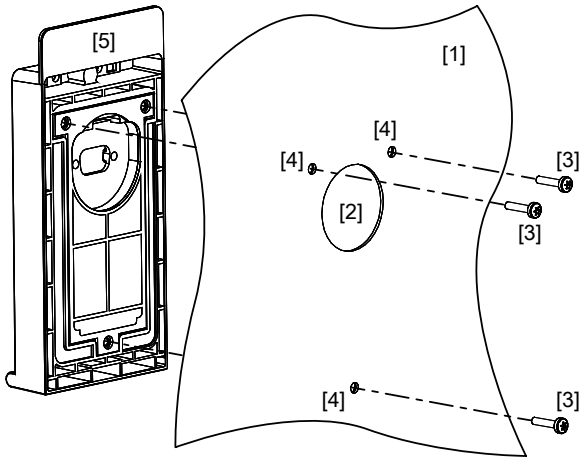

18014433169265931

Proceed as follows:

1. Fasten the drilling template to the mounting surface [1].
2. Center punch the 5 mm bores [4] for the screws [3] and the 40 mm bore [2] for the D-sub connector using the drilling template.
3. Remove the drilling template.
4. Drill the bores.
5. Clean the mounting surface [1].

33955948/EN – 05/2026

6. Place the door mounting frame [5] from outside onto the mounting surface [1].
7. Fix the door mounting frame in place using the screws [3] supplied (max. 2.5 Nm).
8. If you are using a UKS52A cable, insert the port saver from behind through the 40 mm bore [2] and tighten the screws evenly.
9. Insert the D-sub connection cable from behind through the 40 mm bore [2] and tighten the screws evenly.
10. Connect the connection cable to the inverter and tighten the screws evenly.
11. Open the cover.
12. Insert the keypad and perform a functional check.
13. Close the cover and tighten the cover screw (1.2 – 1.4 Nm).

33955948/EN – 05/2026

9.17 Mounting the keypad in the COG11A door mounting frame

Observe the following information:

- Mount the CBG22A local keypad at a distance from the inverter in the COG11A door mounting frame with the UKS52A cable with an additional contact for a key switch. The key switch activates manual mode in the local keypad.
- Mount the CBG11A or CBG21A keypad at a distance from the inverter in the COG11A door mounting frame with the UKS22A cable.

The following figure shows a mounting example with the CBG22A local keypad and an additional key switch:

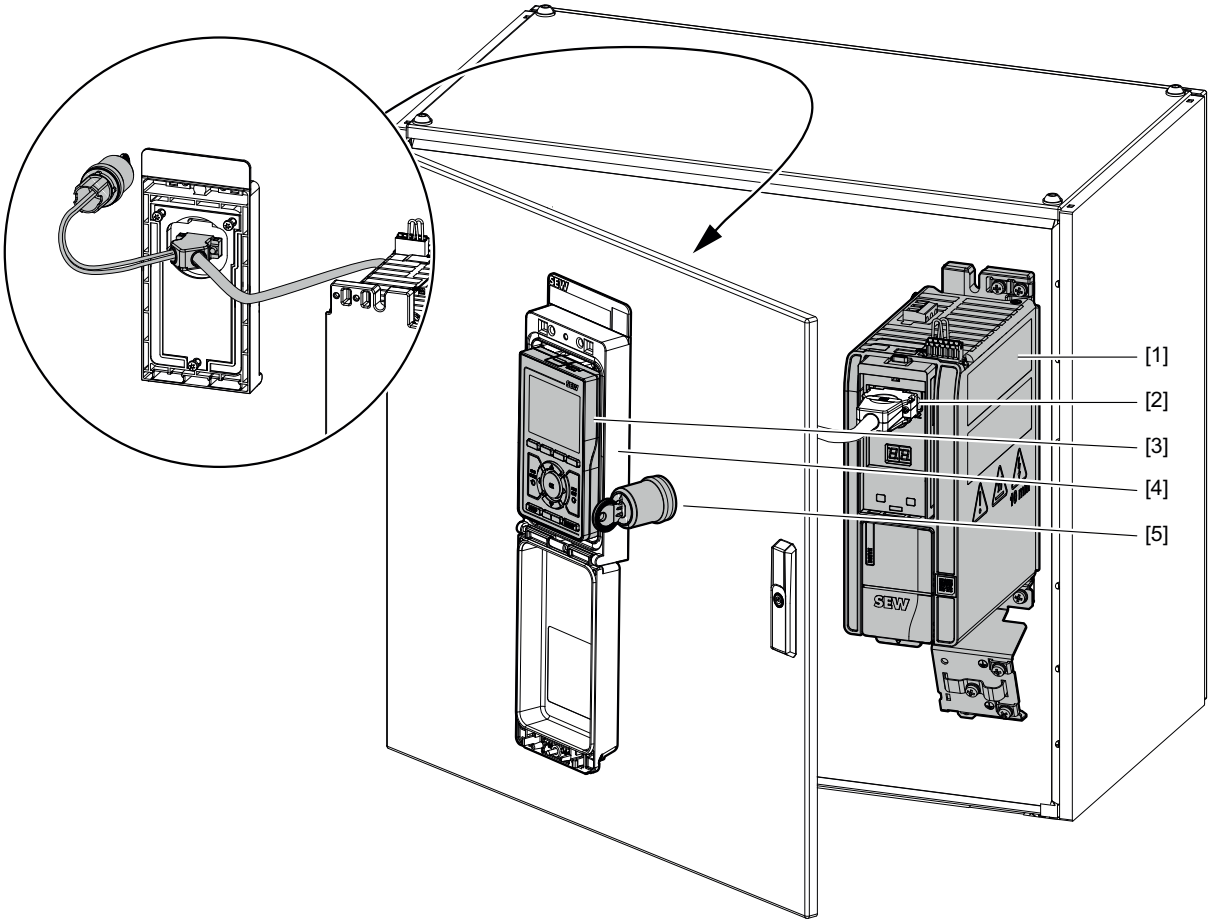

18014449718484235

[1] Inverter (example illustration)
[2] D-Sub cable, 9-pin
[3] CBG22A local keypad
[4] COG11A door mounting frame
[5] Key switch (not available from SEW-EURODRIVE)

33955948/EN – 05/2026

10 Electrical installation

10.1 Installation planning considering EMC aspects

You can optimize the system with regard to electromagnetic compatibility or eliminate existing EMC interference.

The notes in this chapter are not legal regulations, but rather recommendations for improving the electromagnetic compatibility of your system.

For further notes on EMC-compliant installation, refer to the publication Drive Engineering – Practical Implementation edition "EMC in Drive Engineering – Basic Theoretical Principles and EMC-Compliant Installation in Practice".

10.1.1 Compliance with the limit classes

Compliance with the limit classes has been tested in a CE-typical drive system. SEW-EURODRIVE can provide detailed information on request.

10.1.2 Arranging and routing installation components

You must always apply the **relevant standards**.

10.1.3 Control cabinet

Use control cabinets with electrically conductive (galvanized) mounting plates. If several mounting plates are used, connect them in such a way that they are conductive over a large area. EMC-compliant installation of the inverter is only possible with a mounting plate that is conductive over a large area.

10.1.4 Equipotential bonding

Regardless of the PE connection, it is essential that **low-impedance, HF-compatible equipotential bonding** is provided (see also EN 60204-1):

- Mount the line filter and inverter on a shared mounting plate. Make sure they are connected over as large an area as possible and with good conductivity.
- Make sure that there is a suitable equipotential bonding between the system, the control cabinet, the machine structure, the cable ducts, and the gearmotor:
  - Use the mounting plate as the star point with regard to the HF equipotential bonding.
  - Connect the PE busbar to the mounting plate in an HF-compatible manner.
  - Connect the sheet metal cable ducts to the control cabinet in an HF-compatible manner.
  - Connect the cable ducts to the mounting plate in the control cabinet in an HF-compatible manner.
  - Connect the parts of the sheet metal cable ducts together in an HF-compatible manner.
  - Connect the sheet metal cable ducts to the gearmotor in an HF-compatible manner.
- Ensure that shielded cables are connected in an HF-compatible manner, e.g. by using grounding clamps or EMC screw fittings, so that the braided shield has a large connection surface.
- Do not use the cable shield of signal cables for the equipotential bonding.

33955948/EN – 05/2026

10.1.5 Cable installation

Observe the following information:

- Route the power cables, such as the motor cable and the brake cable, separately from the supply system cable and the control cables.
- Route all cables as closely to the reference potential as possible, e.g. the mounting plate.
- Keep all cables as short as possible. Avoid spare loops.

10.1.6 Cable connection

Supply system cable

Observe the following information:

- The supply system cable can be connected to the line choke and/or line filter using single cores or using unshielded cables. If necessary, shielded cables may improve EMC.
- Limit the length of the connection lead between the line filter and the inverter to the absolute minimum needed.
- Always route filtered and unfiltered cables separately from each other.
- Route incoming and outgoing line filter cables separately.

Braking resistor

Observe the following information:

- For connecting braking resistors, use 2 closely twisted cores or a shielded power cable.
- In the case of shielded cables, apply the braided shield over the entire circumference over a large area.
- For the shield connection, use the designated shield plates on the axis module, if provided. In all other cases, use commercially available shield terminals for installing the shielding of motor, brake, and braking resistor cables. Apply the shield as closely as possible to the unit.

Power connection of motor and brake

Observe the following information:

- SEW-EURODRIVE recommends using shielded motor and brake cables. When using unshielded motor cables, SEW-EURODRIVE recommends using HF.. output filters or HD.. output chokes.
- Lay the braided shield of all cables both on the inverter side and on the motor side over the entire circumference.
- For the shield connection, use the designated shield plates on the inverter side (if provided). In all other cases, use commercially available shield terminals for installing the shielding of motor and brake cables. Apply the shield as closely as possible to the inverter.
- If the motor cable and brake cable are combined in a shared cable, the cable must have an inner shield separating the brake cables from the motor conductors. The cables also possess an overall shield. If the brake cable is routed separately, SEW-EURODRIVE recommends using a shielded brake cable.

33955948/EN – 05/2026

- SEW-EURODRIVE recommends using prefabricated cables.
- In the event of exceptionally high EMC requirements, an additional connection point for the shield is recommended. To limit the emitted interference, the motor shield can additionally be grounded to the control cabinet outlet using commercial installation materials (grounding clamps or EMC screw fittings).

Control cable

You may make the connection of the control cables (e.g. digital inputs and others) by unshielded single conductors. Shielded cables increase the EMC. Use the designated shield plates to connect the shield.

For routing outside of the control cabinet, you must use shielded cables.

Encoder

SEW-EURODRIVE recommends using prefabricated encoder cables.

The shield of prefabricated cables from SEW-EURODRIVE is connected via the connector. SEW-EURODRIVE offers the option of additionally mounting the shield using a shield plate supplied.

33955948/EN – 05/2026

10.1.7 Installation example

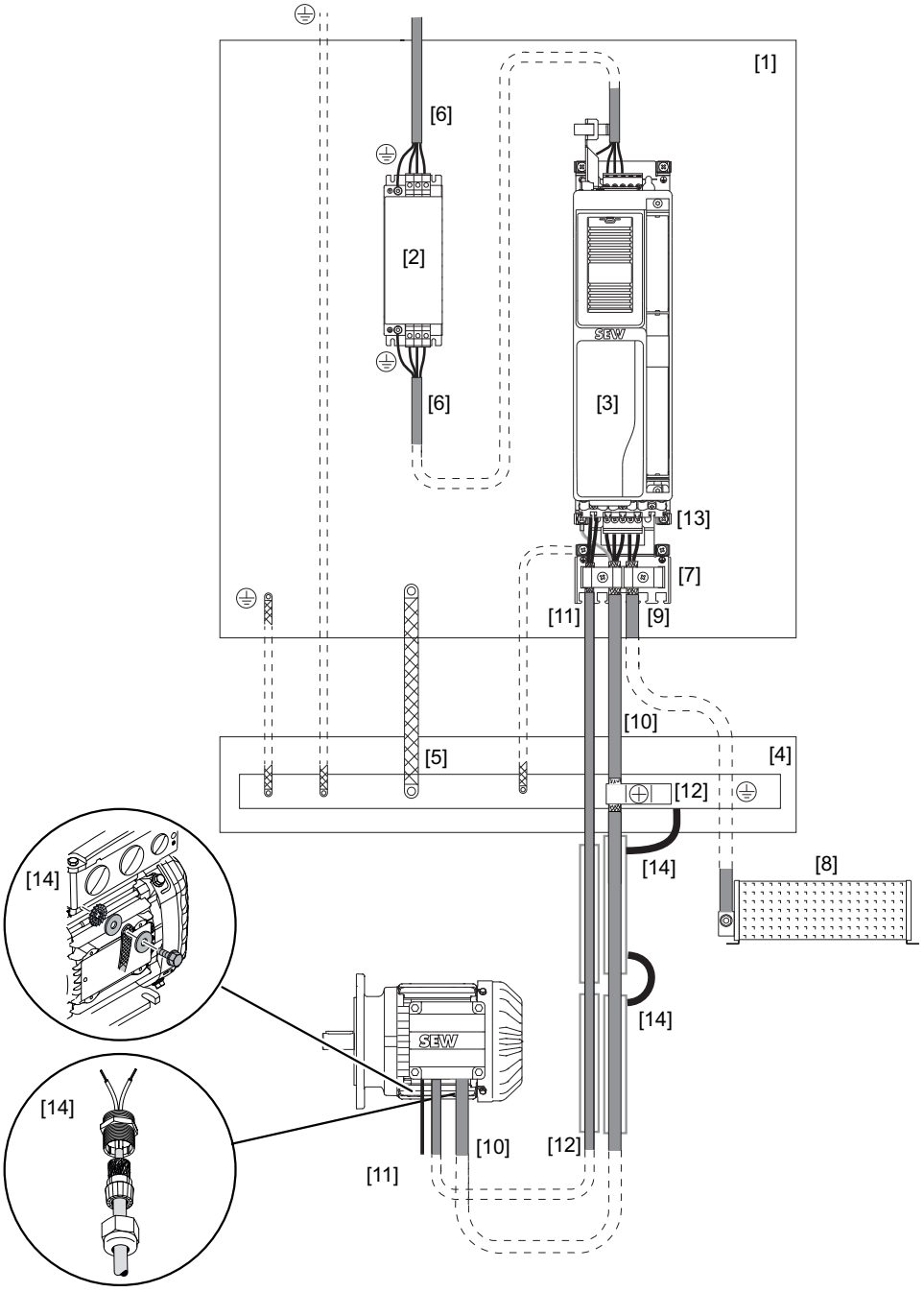

18014418018001291

[1] Galvanized mounting plate
[2] Line filter
[3] Inverter
[4] PE busbar
[5] HF connection of PE busbar/mounting plate
[6] Supply system cable
[7] Shield plate for signal and power cables (depending on the size)
[8] Braking resistor
[9] Braking resistor cable
[10] Motor cable
[11] Brake cable
[12] Grounding clamp
[13] Signal and control cable shield plate
[14] HF connection between conductive cable routings

33955948/EN – 05/2026

10.2 Installation instructions

10.2.1 General information

Observe the following information:

- Prevent unintentional starting of the motor by taking suitable measures, e.g. deactivate the output stage enable by removing connector X20. Take additional safety measures depending on the application to prevent possible injuries to people and damage to machinery.
- Only use closed cable lugs or wire ferrules to prevent litz strands from emerging.
- To avoid mechanical vibrations, fasten connected cables by suitable means, e.g. by fixing them on the shield plate or a clamp on the mounting plate of the control cabinet.
- Disconnect the following electrical connections only in a de-energized state: Motor, supply system, braking resistor, brake, encoder, energy storage unit, discharge unit.

10.2.2 Permitted voltage supply systems

Voltage supply systems	Permissibility
TN and TT systems – voltage systems with directly grounded star point	Use is possible without restrictions.

Voltage supply systems	Permissibility
IT systems – voltage systems with non-grounded star point	Use is only permitted with adherence to the following measures: • The device must be connected to the protective earth. Observe the "Notes on PE connection" (→ 🗎 331). • If an insulation monitoring device is used, it must be capable of measuring the insulation resistance of the grid even if ground capacitances are present in the system. • In the event of a line-side ground fault, the DC link voltage may increase. This can be prevented by using an external braking resistor; in this case, the smallest permissible braking resistor is sufficient. • The EMC limit values for interference emission are not specified for voltage supply systems without grounded star point (IT systems). The effectiveness of line filters is severely limited. It is possible to deactivate the EMC capacitors used in the device, which reduces the capacitance to ground. This affects the interference suppression of the device and may impair electromagnetic compatibility (EMC). To deactivate the EMC capacitors, proceed as follows: **Size 0S, 0L:** 1. Only deactivate the EMC capacitors when used in IT systems, see chapter "Use in IT systems for sizes 0S and 0L" (→ 🗎 326). 2. Mark this on the nameplate in the "IT system activated" box provided for this purpose. **Sizes 3 – 8:** 1. Remove all existing EMC contact screws from all devices only when used in IT systems. For the positions of the EMC contact screws refer to the product manual > chapter "Device structure" > "Size 3" (→ 🗎 280). 2. Mark this on the nameplate in the "IT system activated" box provided for this purpose.
Voltage systems with grounded outer conductor	Use only for nominal line voltages up to max. 240 V.

10.2.3 Use in IT systems for sizes 0S and 0L

Deactivating the EMC capacitors

Proceed as follows:

1. Disconnect the inverter from the power.
2. Check if the inverter is de-energized.
3. Remove all connectors.
4. If installed, remove the filler plug at terminal position X6.
5. Remove the CDM11A diagnostic module.
6. Remove the electronics shield clamp.
7. Remove the retaining screws in the center of the housing front.
8. Remove the housing.

33955948/EN – 05/2026

9. ⚠ **CAUTION!**
   Destruction of the device. Touch the printed circuit board only at the edge, never at electronic components.
10. Remove both retaining screws [1] from the printed circuit board.
11. Place both retaining screws [1] into the plastic insulation pieces [2] included in the delivery.

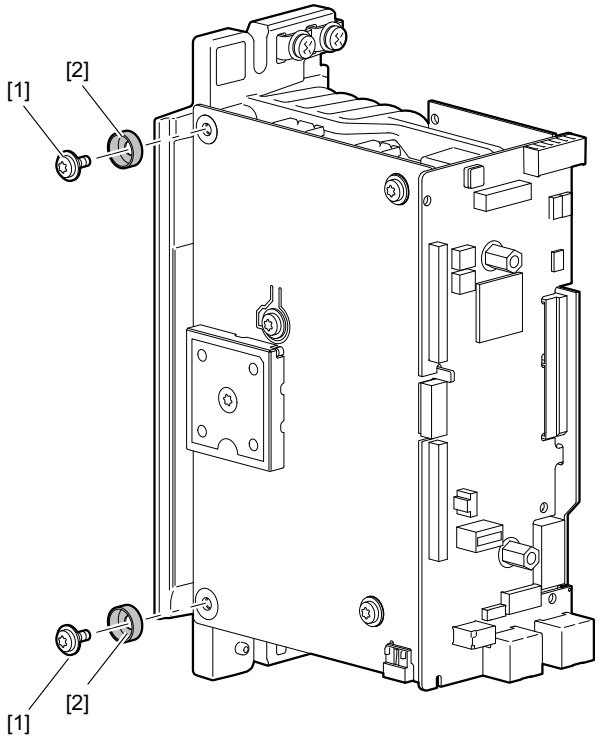

42269102347

12. Re-fasten the retaining screws [1] to the printed circuit board.
13. Close the unit.
14. Mark the modification on the nameplate in the "IT system activated" box [X] provided for this purpose.

10.2.4 Permitted tightening torques

1. **NOTICE!** Failure to adhere to prescribed tightening torques. Damage to the device. Connect the power cables with the specified tightening torques.

Observe the following information:

- Always tighten the terminals or terminal studs by hand and not with electrically or pneumatically operated tools.
- Adhere to the specified tightening torques with a tolerance of +/- 10%.

		Tightening torques in Nm							
		Sizes							
		0S	0L	3	4	5	6	7	8
Line connection	X1	0.5 – 0.6			1.7 – 1.8	8.5 – 9.5	15 – 20	31	
Motor and braking resistor connection	X2	0.5 – 0.6			1.7 – 1.8	8.5 – 9.5	15 – 20	31	

		Tightening torques in Nm							
		Sizes							
		0S	0L	3	4	5	6	7	8
Terminal screw for TN/ IT systems	EMC	1.2 – 1.7		1 – 1.2					
PE connection	–	1.2 – 1.5			3 – 4	6 – 10	15 – 20	31	
Other screw connections at the shield plate and front option	M4	1.4 – 1.6							

10.2.5 Permitted terminal cable cross sections

Single conductor, without conductor end sleeve, rigid or flexible

Inverter	Terminal	Terminal type	Stripping length in mm	Cable cross section in mm²			
				Rigid		Flexible	
				Minimum	Maximum	Minimum	Maximum
Control unit							
All sizes	X20	Spring terminal	9	0.2	1.5	0.2	1.5
	X22		9	0.2	1.5	0.2	1.5
	X6		10	0.2	1.5	0.2	1.5
	X60		10	0.2	1.5	0.2	1.5
Power section							
All sizes	X5	Spring terminal	10	0.2	2.5	0.2	2.5
Size 0S, 0L, 3, 4	X10		10	0.2	1.5	0.2	1.5
Size 5 – 8	X10		10	0.2	2.5	0.2	2.5
Size 0S	X1	Screw terminal[1].	8	0.2	2.5	0.2	2.5
Size 0L	X1		10	0.2	10	0.2	6
Size 3	X1		10	0.2	10	0.2	6
Size 4	X1		12	0.75	16	0.75	16
Size 0S	X2		8	0.2	2.5	0.2	2.5
Size 0L	X2		10	0.2	10	0.2	6
Size 3	X2		10	0.2	10	0.2	6
Size 4	X2		12	0.75	16	0.75	16

1) SEW-EURODRIVE recommends using conductor end sleeves for installation with screw terminals and a flexible cable

33955948/EN – 05/2026

Single conductor, with conductor end sleeve, flexible, with or without plastic collar

Inverter	Terminal	Terminal type	Stripping length in mm	Cable cross section in mm²			
				Plastic collar			
				With		Without	
				Minimum	Maximum	Minimum	Maximum
Control unit							
All sizes	X20	Spring terminal	9	0.25	1.5	0.25	0.75
	X22		9	0.25	1.5	0.25	0.75
	X6		10	0.14	0.75	0.25	1.5
	X60		10	0.14	0.75	0.25	1.5
Power section							
All sizes	X5	Spring terminal	10	0.25	2.5	0.25	2.5
Size 0S, 0L, 3, 4	X10		10	0.14	0.75	0.25	1.5
Size 5 – 8	X10		10	0.25	2.5	0.25	2.5
Size 0S	X1	Screw terminal	8	0.25	2.5	0.25	2.5
Size 0L	X1		10	0.25	4	0.25	6
Size 3	X1		10	0.25	4	0.25	6
Size 4	X1		12	0.5	10	0.5	16
Size 0S	X2		8	0.25	2.5	0.25	2.5
Size 0L	X2		10	0.25	4	0.25	6
Size 3	X2		10	0.25	4	0.25	6
Size 4	X2		12	0.5	10	0.5	16

Double core, with conductor end sleeve, flexible, with or without plastic collar

Inverter	Terminal	Terminal type	Stripping length in mm	Two-conductor cable, same cross section in mm², Twin conductor end sleeve			
				Plastic collar			
				With		Without	
				Minimum	Maximum	Minimum	Maximum
Control unit							
All sizes	X20	Spring terminal	–	–	–	–	–
	X22		–	–	–	–	–
	X6		–	–	–	–	–
	X60		–	–	–	–	–
Power section							

33955948/EN – 05/2026

Inverter	Terminal	Terminal type	Stripping length in mm	Two-conductor cable, same cross section in mm², Twin conductor end sleeve			
				Plastic collar			
				With		Without	
				Minimum	Maximum	Minimum	Maximum
All sizes	X5	Spring terminal	10	0.5	1.5	–	–
Size 0S, 0L, 3, 4	X10		10	–	–	–	–
Size 5 – 8	X10		10	0.5	1.5	–	–
Size 0S	X1	Screw terminal	8	0.5	1	0.25	1
Size 0L	X1		10	0.25	2.5	0.25	1.5
Size 3	X1		10	0.25	2.5	0.25	1.5
Size 4	X1		12	0.5	6	0.5	4
Size 0S	X2		8	0.5	1	0.25	1
Size 0L	X2		10	0.25	2.5	0.25	1.5
Size 3	X2		10	0.25	2.5	0.25	1.5
Size 4	X2		12	0.5	6	0.5	4

"**–**" Not permitted

10.2.6 Selecting the residual current device

The inverter can cause a direct current in the PE conductor.

Proceed as follows to select the residual current device:

1. If using a residual current device is not mandatory according to the standards, SEW-EURODRIVE recommends not using a residual current device.
2. ⚠ **WARNING!** No protection against electric shock if an incorrect type of residual current device is used. Severe or fatal injuries.
   If a residual current device (residual current device RCD or residual current monitor RCM) is provided, use an all-current-sensitive RCD or RCM of type B.
3. If a residual current device is required, select the residual current device according to the requirements for protecting persons, fire protection or system protection. Observe the tripping characteristic, the deceleration and the rated tripping current of the residual current device during selection.
4. During project planning, note that leakage currents which are as low as possible occur in the system for operational reasons.
5. If the operational leakage currents in a system are too high for a single residual current device, you can split the current supply to several circuits with their own residual current devices.

10.2.7 Using the line contactor

Proceed as follows:

1. Always place the line contactor before the line filter (if present).

33955948/EN – 05/2026

2. Use at least one contactor of utilization category AC-3 (EN 60947-4-1) as a line contactor.
3. **NOTICE!** Failing to observe the minimum switch-off time of the line contactor can cause material damage. Irreparable damage to the inverter or unforeseen malfunctions.
   After switching off the voltage supply, keep it switched off for at least 10 s.
   - ⇨ Do not switch on the voltage supply **of 3-phase devices more frequently than once every 60 seconds**.
   - ⇨ Do not switch on the voltage supply **of 1-phase devices more frequently than once every 120 seconds**.
4. Do not use the line contactor for jog mode, but only for switching the device on and off.

The following table provides an overview of when a line contactor is required. Observe the information on the necessary protective measures for the braking resistor used in the **Product manual** > chapter "Protecting the braking resistor against thermal overload" (→ 🗎 345).

Inverter	Braking resistor	Protective element/ preventive measure	Line contactor required
Size 0S, 0L, 3	No BW..	–	No
	BW.. Flat design	–	No
	BW.. as PTC	–	No
	BW..	External overload relay	Yes
	BW..-T	Temperature contact evaluation	Yes
From size 4	No BW..	–	No
	BW.. Flat design	–	No
	BW.. as PTC	–	No
	BW..	External overload relay	No
	BW..-T	Temperature contact evaluation	No

If a braking resistor is connected to the inverter from size 4 without using a line contactor, an external DC 24 V voltage supply must be provided on the inverter.

10.2.8 Information regarding PE connection

A leakage current > 3.5 mA may be generated when operating the inverter. To avoid shock currents according to EN 61800-5-1, observe the following cable cross sections:

- Supply system cable < 10 mm^2:

  Route a second PE conductor with the cable cross section of the supply system cable in parallel to the protective earth via separate terminals or use a copper protective earth conductor with a cable cross section of 10 mm^2.

  If an inverter with a metal backplane is located on a grounded mounting plate, it is not necessary to connect a 2nd PE to the inverter. The connection for grounding the mounting plate must be marked as PE connection.
- Supply system cable 10 mm^2 – 16 mm^2:

  Route a copper protective earth conductor with the cable cross section of the supply system cable.

33955948/EN – 05/2026

- Supply system cable 16 mm^2 – 35 mm^2:

  Route a copper PE conductor with a cable cross section of 16 mm^2.
- Supply system cable > 35 mm^2:

  Route a copper protective earth conductor with half the cable cross section of the supply system cable.
- If an earth leakage circuit breaker is used for protection against direct and indirect contact, it must be universal current sensitive (RCD type B).

10.2.9 Installation with protective separation

The inverter meets all requirements for protective separation of power and electronics connections according to EN 61800-5-1. The connected signal circuits, including the DC 24 V voltage supply, have to meet the requirements according to SELV (Safety Extra Low Voltage) or PELV (Protective Extra Low Voltage) to ensure protective separation. The installation must meet the requirements for protective separation.

10.2.10 Protection devices

Observe the following information:

- Manufacturer's declaration: The devices are equipped with an integrated protection device against short circuit. The switch-off times of the inverters are max. 100 ms and are therefore well below the switch-off times required by the standards.
- The power contactor of the supply system cable must be realized through external overload devices.
- The relevant standards must be observed concerning the cable cross section, the voltage drop, and the type of routing that is used.

10.3 Connection to power terminals

The power cable connection terminals for the supply, motor, braking resistor, and DC link are implemented either as connectors or as terminal studs, depending on the size.

Up to and including size 4, power cables are connected via connectors.

From frame size 5 onward, power cables are connected via terminal studs. For size 8, two of these are provided per connection. It is possible to connect 1 or 2 conductors per terminal stud.

Note that for inverters from size 5 onward, degree of protection IP20 is only achieved if the terminal studs (for connecting the supply, motor, braking resistor, and DC link) are protected against contact by optionally available plastic covers, and if the ring lugs are insulated with heat-shrink tubing, see the **Product manual** > chapter "Fitting plastic covers for degree of protection IP20" (→ 🗎 334) and chapter "Standard accessories" (→ 🗎 121).

10.3.1 Designing the connection with 1 cable

Proceed as follows:

33955948/EN – 05/2026

1. Attach the heat shrink tubing at the ring lug.
2. Connect the cables. If the device is connected using one cable, the plastic cover in the connection block must not be removed for sizes 6, 7, and 8.

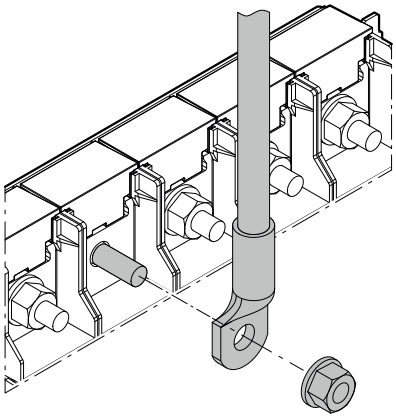

9007236401887627

10.3.2 Designing the connection with 2 cables

Proceed as follows:

1. Attach a heat shrink tubing at the ring lugs.
2. For sizes 6, 7, and 8, remove the plastic covers in the connection block.

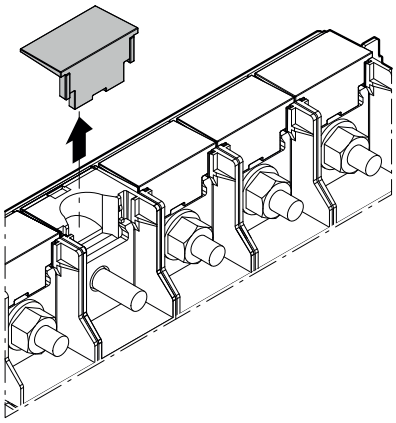

37147149067

3. Connect the two cables.

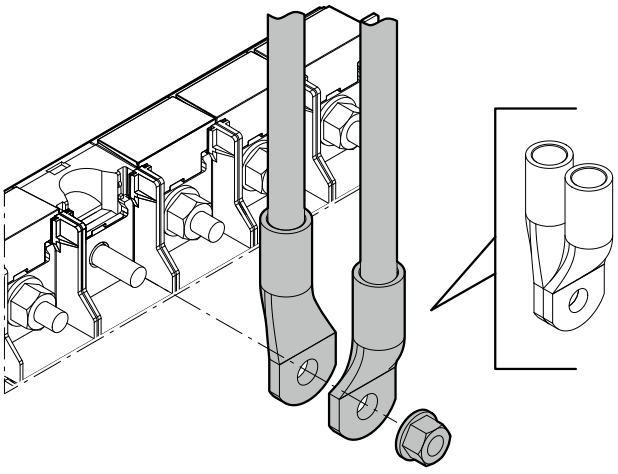

42922486923

10.3.3 Fitting plastic covers for degree of protection IP20

Proceed as follows:

✓ The plastic covers can be ordered as options.

✓ The ring lug is insulated with heat shrink tubing.

1. The plastic covers must be broken out in different ways depending on the cross section used.

Size 5	Sizes 6 – 8
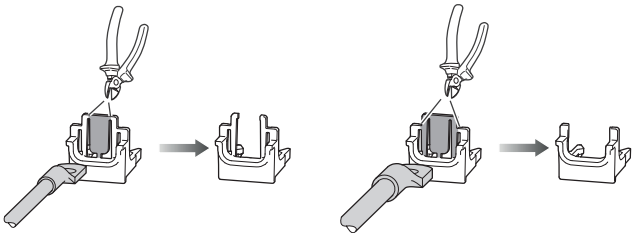	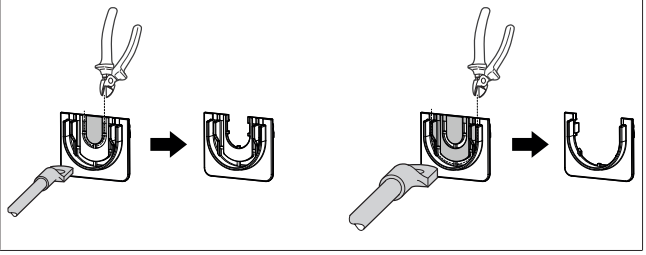

2. Fit the plastic covers at the individual connections.

Size 5	Sizes 6 – 8
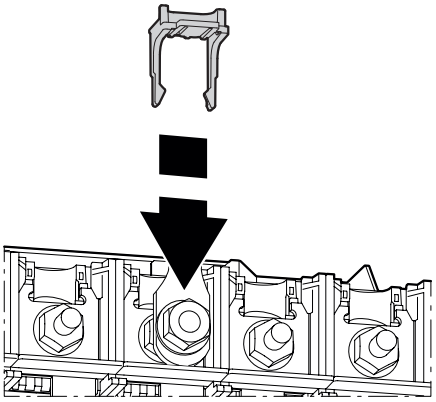	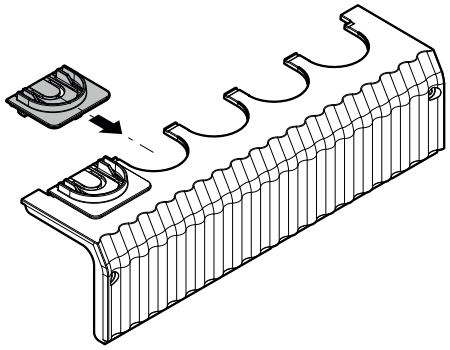

10.4 24 V supply voltage

The MCX91A.. inverters have an internal 24 V voltage supply that can also be supported externally.

For size 3 – 8 inverters, the 24 V switched-mode power supply has a power of 80 W. For size 0S and 0L inverters, the internal 24 V switched-mode power supply has a power of 15 W.

Observe the following information for devices of sizes 0S and 0L:

- Devices without safety option do not require an external backup voltage. In this case, a total of 300 mA is available at the outputs. The maximum load of the MOVILINK® DDI connection is 150 mA. The actual current consumption of the MOVILINK® DDI connection must be subtracted from the 300 mA.

33955948/EN – 05/2026

- Devices with safety option (CSB, CSL, CSS) must always have an external backup voltage. This backup voltage must not be interrupted; otherwise, the safety options are not supplied.
- The following applies to both cases:

  If the device is supported by an external supply, the entire supply is provided by the external power supply unit. In this case, the MOVILINK® DDI connection can be loaded with a maximum of 500 mA. For all other device outputs, the limitation of the technical data applies.

If a 24 V backup voltage is necessary, it must be switched on before the line voltage and switched off after the line voltage.

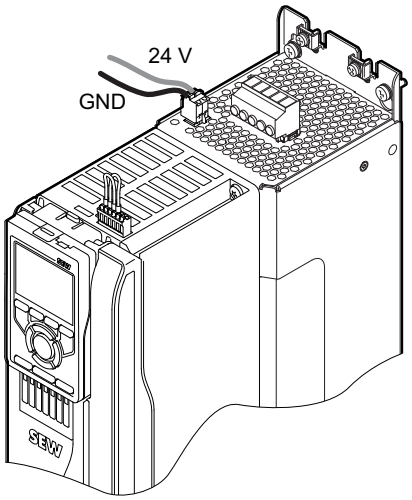

42202926347

The maximum permitted length of the 24 V supply cable is 30 m.

33955948/EN – 05/2026

10.5 Brake chopper output

Observe the following information:

- Do not connect capacitive or inductive loads.
- Only connect ohmic loads (braking resistors).
- Connect the braking resistor to the connections +R and -R.
- Note that the maximum permissible cable length between the braking resistor and inverter is 100 m.
- Use a shielded cable or twisted single cores.

10.6 Temperature evaluation



⚠ WARNING

Dangerous voltages at the terminals of the inverter/power supply module when connecting an unsuitable temperature sensor.

Death or severe injuries due to electric shock.

- To avoid violating the requirements for protective separation, only connect temperature sensors with protective separation to the motor winding to the temperature evaluation.

The temperature sensor can be connected as follows:

- via connections TF1 and GND on terminal X10
- via MOVILINK® DDI to X16

Observe the following additional notes for group and multi-motor drives:

- Preferably use bimetallic temperature switches TH.
- The series connection of the TH contacts (normally closed) is not subject to any restriction if joint monitoring is provided.
- If the TF temperature sensors are available in motors, the temperature sensors of up to 3 motors can be connected in series.

10.7 Brake control output

Observe the following information:

- If the brake connection and the motor connection are combined in one power cable, the brake cable must be shielded separately. The shielding of the power cable and the brake cable must be connected to the motor and inverter over a large area.
- SEW-EURODRIVE recommends also using a shielded brake cable for separate brake cable routing.
- Note the different project planning criteria to determine the length of brake cable and motor cable.
- Connect the brakes and/or brake control units to terminal strip X10 (DB0/DB00 and GND).

33955948/EN – 05/2026

10.8 Inputs/outputs

Observe the following information:

- The digital inputs and outputs are referenced to GND. GND is connected to PE. Incorrectly applied voltages can damage the digital inputs and digital outputs. Do not apply external voltage to the digital outputs.
- Cables outside the control cabinet must be shielded.
- When connecting the shielding, ensure equipotential bonding.
- The cable length must not exceed 30 m.
- Connect the digital inputs and outputs to the appropriate connections.

10.9 Encoders

10.9.1 Installation notes

Observe the following notes before installation:

- To ensure a flawless shield connection, you must use an EMC screw fitting for the cable entry of the signal cable on the motor.
- For drives with a plug connector, connect the shield on the encoder plug.
- Use shielded cables with twisted pair cores. Connect the shield over a wide area at both ends:
  - on the encoder in the cable gland or in the encoder plug
  - on the inverter onto the shield plate
- Route the encoder cable separately from the power cables.
- When using HTL encoders and an encoder cable with an open end, the conductors for motor protection, encoder tracks, and voltage supply must be twisted in pairs up to the respective terminal point:

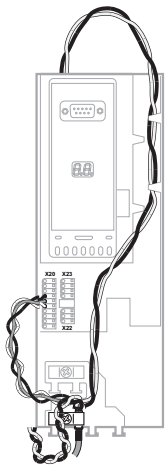

18014434443279499

- The supply voltage of the encoder can be provided via a separate terminal point to the 24 V supply or, if the inverter is supported with external 24 V via terminal X5, it can be tapped there. The encoder supply via terminal X20 is not possible.

10.9.2 Connection

Encoders MOVILINK® DDI and EI7C FS

Encoder	Inverter connection	Conductor color[1] according to IEC 60757	Description
MOVILINK® DDI	X16	–	Coaxial cable
EI7C FS	X18	–	Mini IO

1) When using encoder cables from SEW-EURODRIVE

Encoder with M12 connector

Encoder	Inverter connection	Conductor color[1] according to IEC 60757	Description
EI7C, EI8C[2]	X20:4	BN	A-track at DI04
	X20:5	YE	B-track at DI05
	X20:6[3]	GN	C track on DI06 (optional)[4]
	X10:TF1	RD	TF+
	X10:GND	BU	TF-
	External[5]	GY	+Ub
	External[5]	PK	GND

1) When using encoder cables from SEW-EURODRIVE
2) The encoder EI8C on M12 is in preparation.
3) The C track is only used with EI8C encoders. With the EI7C, this wire remains unused.
4) The C track is only used as an option with EI8C encoders. With the EI7C, this wire remains unused.
5) Encoder supply via external 24 V voltage supply.

Encoder with M23 connector

Encoder	Inverter connection	Conductor color[1] according to IEC 60757	Description
EI8C EK8C EV8C EG7C	X20:4	RD	A-track at DI04
	X20:5	YE	B-track at DI05
	X20:6	BN	C-track at DI06 (optional)
	X10:TF1	GYPK	TF+
	X10:GND	RDBU	TF-
	External[2]	GY	+Ub
	External[2]	PK	GND

1) When using encoder cables from SEW-EURODRIVE
2) Encoder supply via external 24 V voltage supply.

33955948/EN – 05/2026

Encoder with connection cover

Encoder[1]	Inverter connection	Conductor color[2] according to IEC 60757	Description
EK8C EV8C ES7C EV7C EG7C	X20:4	RD	A-track at DI04
	X20:5	YE	B-track at DI05
	X20:6	BN	C-track at DI06 (optional)
	External[3]	GY	+Ub
	External[3]	PK	GND

1) The motor temperature evaluation must be routed separately at the encoder connection cover.
2) When using encoder cables from SEW-EURODRIVE
3) Encoder supply via external 24 V voltage supply.

Encoder with direct connection (not from SEW-EURODRIVE)

Encoder	Inverter connection	Conductor color[1] according to IEC 60757	Description
HTL encoder[2]	X20:4	–	A-track at DI04
	X20:5	–	B-track at DI05
	X20:6	–	C-track at DI06 (optional)
	X10:TF1	–	TF+
	X10:GND	–	TF-
	External[3]	–	+Ub
	External[3]	–	GND

1) When using encoder cables from SEW-EURODRIVE
2) Maximum 56 kHz.
3) Encoder supply via external 24 V voltage supply.

10.10 MOVILINK® DDI

10.10.1 Disconnecting the MOVILINK® DDI connector

Proceed as follows:

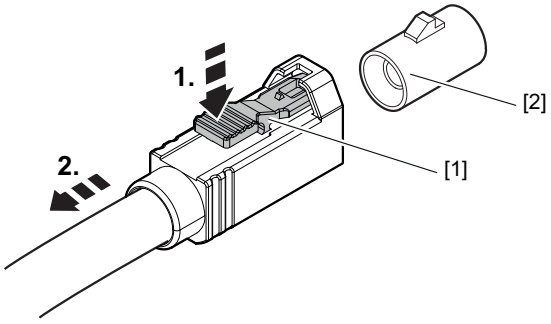

9007238074952075

✓ Before disconnecting the MOVILINK® DDI connector, make sure that the DC 24 V voltage supply is switched off or standby mode is activated.

1. Press the interlocking [1] on the connector.
2. Remove the MOVILINK® DDI connector from the connection for digital motor integration X16 [2].

10.10.2 Connection when using a hybrid cable

Observe the following information:

- Use the shield plates provided for the shield support (if present).
- Apply the shielding of the hybrid cable over the entire circumference over a large area.
- Keep the distance or cable length between the shield connection and the connection for the cable conductors as short as possible.
- To avoid communication errors, the exposed length of the coaxial cable must not exceed 50 cm. For more information, refer to the addendum to the "Digital Motor Integration MOVILINK® DDI Toolset 1" operating instructions.

Connection example size 0S – 4 (using size 0S as an example)

The following figure shows an example of the connection when using a hybrid cable for the inverters of sizes 0S and 0L:

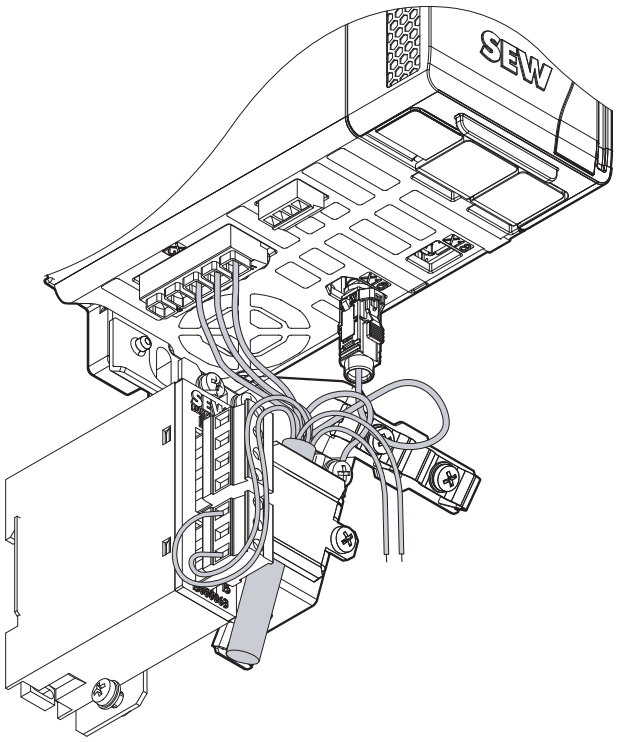

9007242146790027

10.10.3 Connection when power and coaxial cables are routed separately

Observe the following information:

- Connect the shield of the outer cable jacket of the coaxial cable to the terminal provided for this purpose on the basic unit.
- To avoid communication errors, the exposed length of the coaxial cable must not exceed 50 cm. For more information, refer to the addendum to the "Digital Motor Integration MOVILINK® DDI Toolset 1" operating instructions.

3955948/EN – 05/2026

Connection example size 5

The following figure uses MOVIDRIVE® technology as an example to illustrate the connection setup for inverters of size 5 when power and coaxial cables are routed separately:

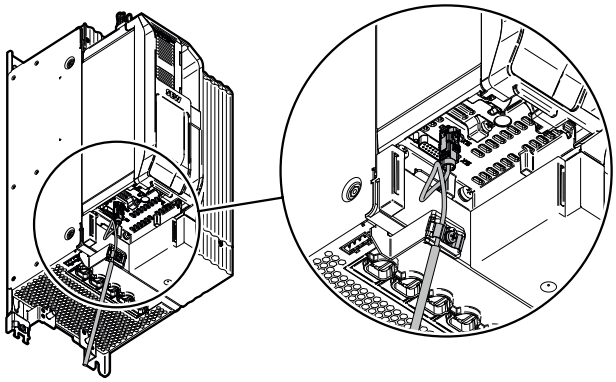

18014437329690635

Connection example size 6

The following figure uses MOVIDRIVE® technology as an example to illustrate the connection setup for inverters of size 6 when power and coaxial cables are routed separately:

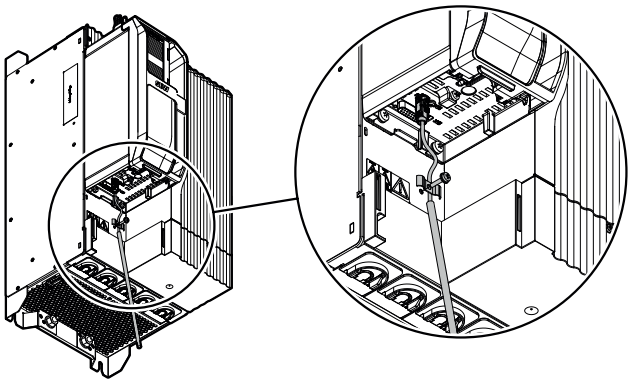

18014437329695499

Connection example size 7 – 8

The following figure uses MOVITRAC® advanced, size 7, as an example to illustrate the connection setup for inverters of size 7 – 8 when power and coaxial cables are routed separately:

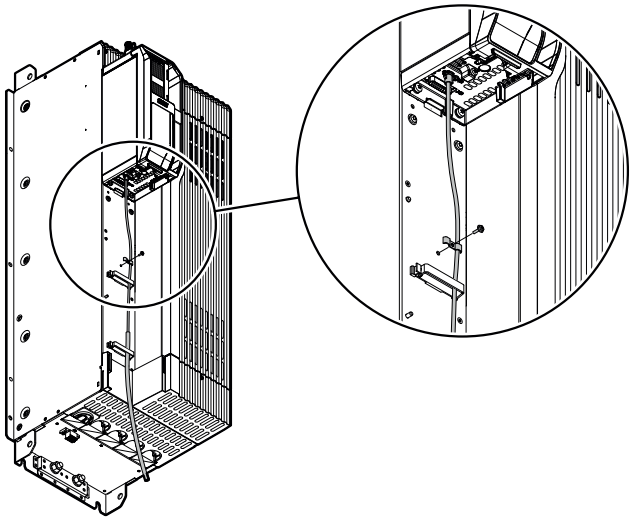

9007242133760779

Route the coaxial cable in such a way that it passes through the two tabs. Connect the shield of the coaxial cable to the terminal provided for this purpose.

10.10.4 Permitted number of connection or cable disconnection points

When using a hybrid cable or a solo coaxial cable on the MOVILINK® DDI interface, a maximum of 4 connection or cable disconnection points are permitted. The connection points that are implemented directly on the inverter or in the drive by means of FAKRA connectors are not included in the count. Communication errors can occur if there are more than 4 connection or cable disconnection points.

Examples

- Cable from inverter to motor with M23 connector KD1: 1 plugging position
- Cable from inverter to motor with M23 connector KD1 and 1 extension cable M23 at both sides: 2 plugging positions
- Cable from inverter to motor with M23 connector KD (hybrid cable gland without plug connector): 0 plugging positions

33955948/EN – 05/2026

10.11 Fieldbus cables and cable routing

Proceed as follows when laying the fieldbus cables:

1. Remove the safety cover, see chapter "Removing and attaching the safety cover" (→ 302).
2. Insert the two cables into the connections X40 and X41 of the device, as shown in the following example:

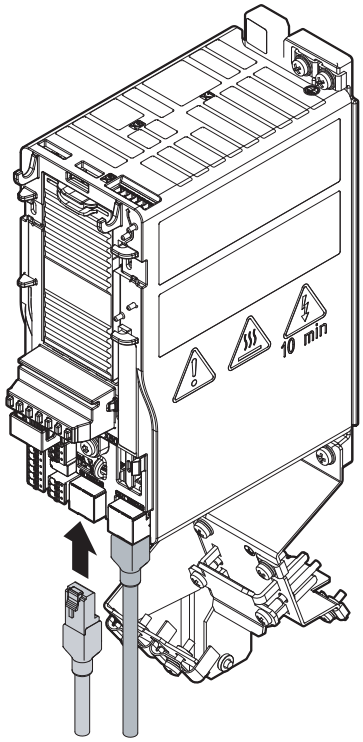

3. Route the cables according to the following figures depending on the size. If necessary, use cable ties for fastening to the fastening lugs.

33955948/EN – 05/2026

Size 0S	Size 0L	Size 3 – 4	From size 5
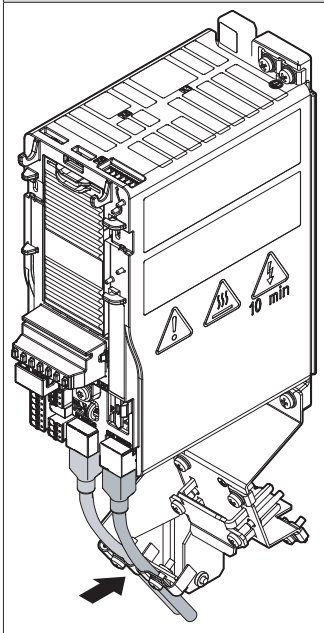	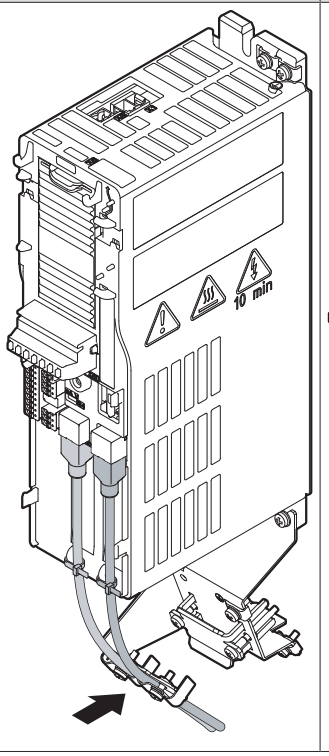	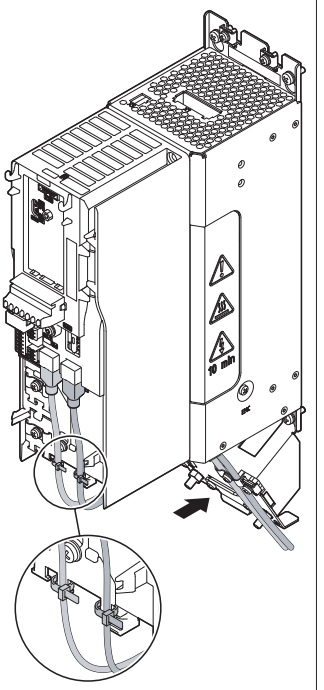	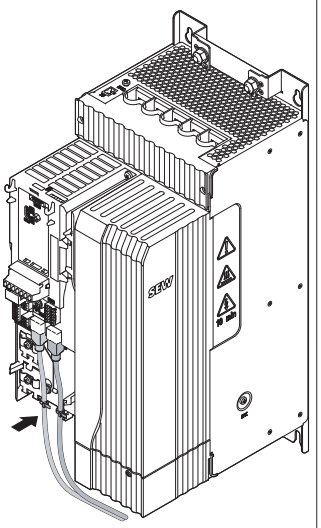

4. Break the two plastic parts [1] out of the safety cover as shown in the following example:

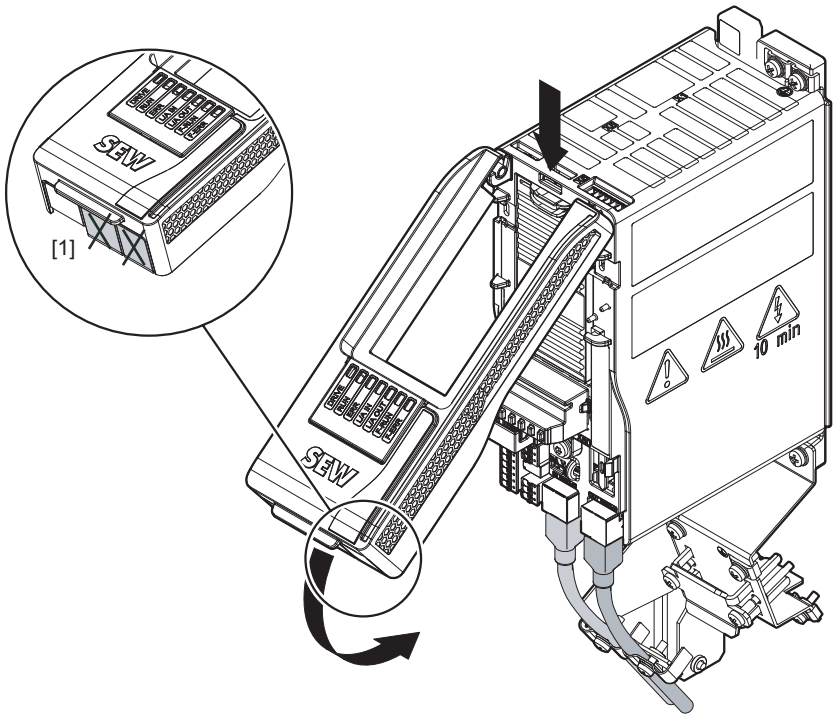

5. Attach the safety cover again.

33955948/EN – 05/2026

10.12 BW.. braking resistors

10.12.1 Protecting the braking resistors from thermal overload

The braking resistors can be protected against overload and overtemperature with an integrated temperature switch for BW..-T braking resistors and with an external thermal overload relay for BW.. braking resistors.

Circuit 1 with integrated temperature switch	Circuit 1 with external overload relay
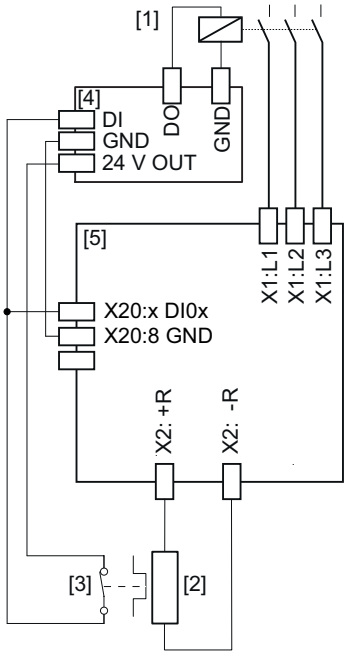	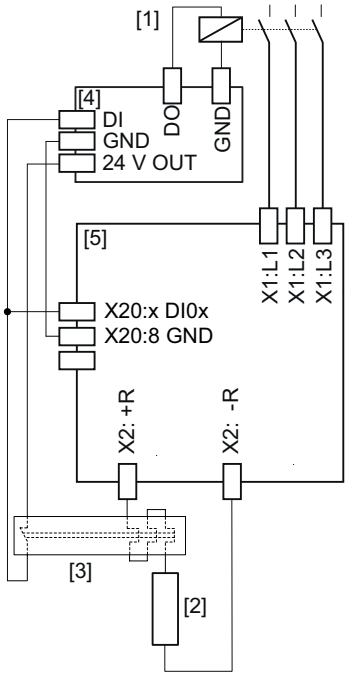

[1] Line contactor
[2] Braking resistor
[3] Internal temperature switch or overload relay
[4] PLC
[5] Inverter

For the sake of clarity, only the integrated temperature switch is visualized in the following graphics. Implementation with an external thermal overload relay is carried out in the same way.

INFORMATION

A PTC braking resistor becomes highly resistive in the event of an overload.

INFORMATION

Flatpack resistors have internal thermal protection (non-replaceable fuse), which interrupts the circuit in the event of an overload and protects against consequential damage. No additional thermal protection is required.

Observe the project planning specifications and the documented assignments of inverter and braking resistor.

33955948/EN – 05/2026

Inverter sizes 0S, 0L, 3

The following 3 connections exist:

Connection 1	Connection 2	Connection 3
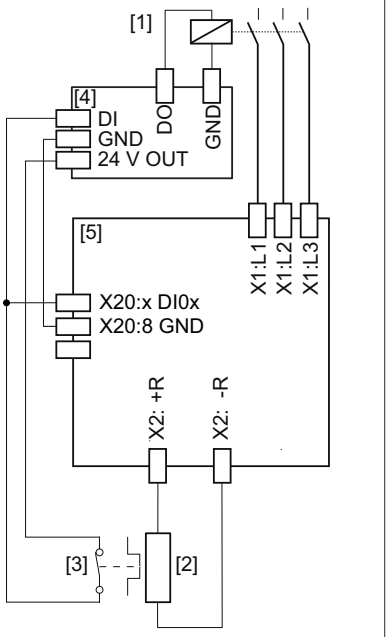	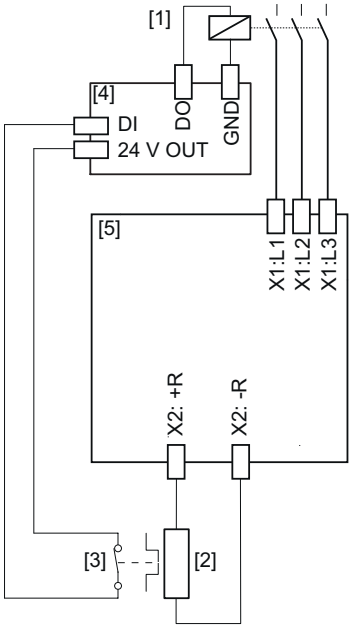	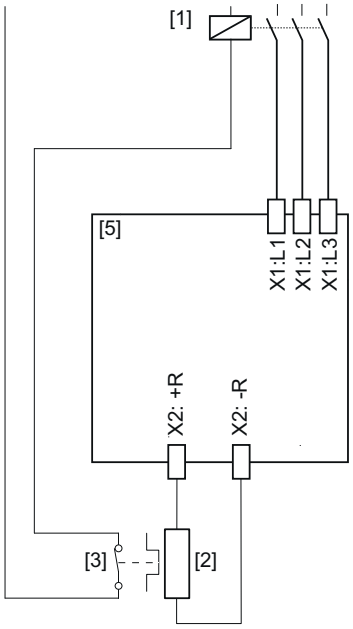

[1] Line contactor
[2] Braking resistor
[3] Internal temperature switch or overload relay
[4] PLC
[5] Inverter

Circuit 1

INFORMATION

When circuit 1 is used, the reference potential GND of the digital inputs on the PLC must be the same as the reference potential of the inverter.

The signal contact is evaluated in the inverter and in the PLC. The digital input of the inverter used for the evaluation must be parameterized to the "External braking resistor fault" function.

If the internal temperature switch responds, note the following:

- The PLC must disconnect the power supply.
- The inverter switches to "Output stage inhibit".

Circuit 2

The signal contact is only evaluated in the PLC.

If the internal temperature switch responds, note the following:

- The PLC must disconnect the power supply.
- There is no direct response in the inverter.

33955948/EN – 05/2026

With connection 2, it is possible that the PLC finishes the current travel cycle although the thermal circuit breaker has tripped. Only then is the power supply disconnected. In this case, the residual braking energy $W_{Rest} = P_{BRnom} \times 20$ s must not be exceeded.

Circuit 3

The signal contact directly affects the line contactor.

If the internal temperature switch responds, note the following:

- A response by the PLC is not required.
- There is no direct response in the inverter.

Inverters of size 4 and larger

The following 3 connections exist:

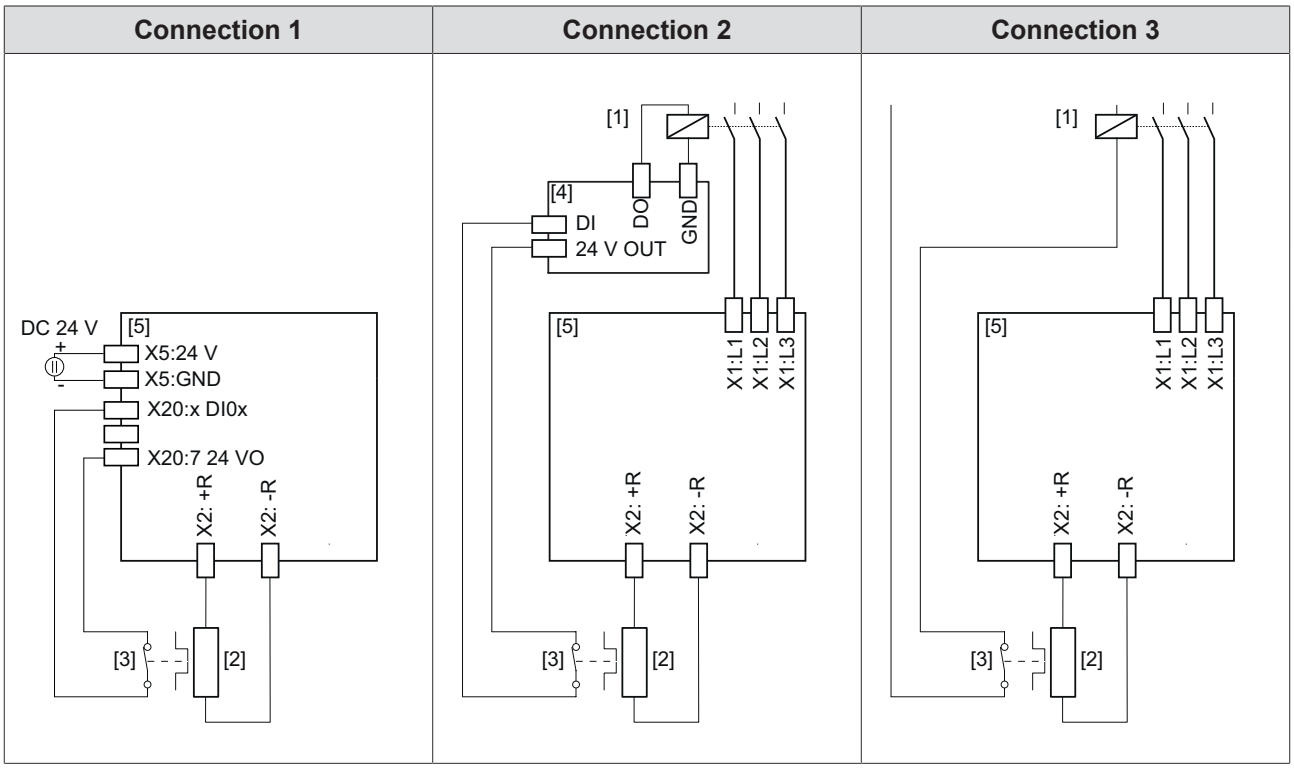

[1] Line contactor
[2] Braking resistor
[3] Internal temperature switch or overload relay
[4] PLC
[5] Inverter

Circuit 1

INFORMATION

When using connection variant 1 (connection of braking resistor without line contactor), the inverter must be supplied with external DC 24 V.

INFORMATION

When circuit 1 is used, there is no galvanic isolation from the grid. The device is not de-energized. If it is necessary to de-energize the device, e.g., for electrical work, you have to switch it off with a main switch, for example. The switch-off design is always done system-specific depending on the specific application considering the applicable regulations.

The signal contact is evaluated in the inverter. The digital input of the inverter used for the evaluation must be parameterized to the "External braking resistor fault" function

If the internal temperature switch responds, note the following:

- A response by the PLC is not required.
- It is not necessary to disconnect the line connection using an external switching device.
- If an internal short circuit in the brake chopper is detected by the inverter, the inverter interrupts the energy supply by inhibiting the rectifier.

Circuit 2

The signal contact is only evaluated in the PLC.

If the internal temperature switch responds, note the following:

- The PLC must disconnect the power supply.
- There is no direct response in the inverter.

With connection 2, it is possible that the PLC finishes the current travel cycle although the thermal circuit breaker has tripped. Only then is the power supply disconnected. In this case, the residual braking energy $W_{Rest} = P_{BRnom} \times 20$ s must not be exceeded.

Circuit 3

The signal contact directly affects the line contactor.

If the internal temperature switch responds, note the following:

- A response by the PLC is not required.
- There is no direct response in the inverter.

10.12.2 Connecting braking resistors

Proceed as follows:

1. Connect the braking resistor to +R and -R.
2. For BW..-...-01 braking resistors, use connections 1 and 3. Connection 2 is reserved and may not be used.

10.12.3 Connecting braking resistors in parallel

It is permitted to connect several identical braking resistors in parallel. In that case, the following applies:

- Connect the power connections of the braking resistors to +R and -R in parallel.
- Pay attention to the minimum permitted braking resistance value R_{BR_min} when connecting braking resistors in parallel.

33955948/EN – 05/2026

- For BW.. braking resistors, each braking resistor requires separate protection against thermal overload, e.g. an external thermal overload relay.
- For BW..-T braking resistors (T = with integrated temperature switch), the signal contacts (NC contacts) must be connected in series.

10.13 ND.. line choke

Observe the following information:

- The connection cable between line choke and inverter does not have to be shielded.
- Limit the length of the cable between the line choke and the line filter to the length that is absolutely necessary.

10.14 NF.. line filter

Observe the following information:

- Do not wire any other consumers between the line filter and the device.
- No switching is allowed between the line filter and the device.
- The connection cable between the line filter and the device does not have to be shielded.
- Limit the length of the cable between the line filter and the device to the required length.
- Always lay the cables before and after the line filter separately.
- **Under no circumstances** should the cables before and after the line filter be routed along the motor cable.

10.15 Terminal assignment

10.15.1 General information

INFORMATION

The device-internal reference potential is designated as GND. All reference potentials GND are internally connected to PE.

INFORMATION

The assignment "Reserved" means that no cable may be connected to this connection.

The technical data for the power and control electronics connections is provided in the **Product manual** > chapter "Technical data" (→ 🗎 44).

33955948/EN – 05/2026

10.15.2 Basic device

Size 0S 1-phase

Terminal	Contact	Function	
	X1:N	N	Supply system connection
	X1:L1	L1	
	⏚	PE	Protective earth connection
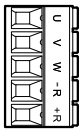	X2:U	V	Motor connection
	X2:V	V	
	X2:W	W	
	X2:-R	-R	Braking resistor connection
	X2:+R	+R	
	⏚	PE	Protective earth connection

Size 0S 3-phase

Terminal	Contact	Function	
	X1:L1	L1	Supply system connection
	X1:L2	L2	
	X1:L3	L3	
	⏚	PE	Protective earth connection
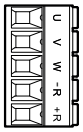	X2:U	V	Motor connection
	X2:V	V	
	X2:W	W	
	X2:-R	-R	Braking resistor connection
	X2:+R	+R	
	⏚	PE	Protective earth connection

Size 0L 1-phase

Terminal	Contact	Function	
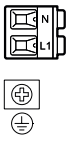	X1:N	N	Supply system connection
	X1:L1	L1	
	⏚	PE	Protective earth connection
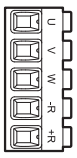	X2:U	V	Motor connection
	X2:V	V	
	X2:W	W	
	X2:-R	-R	Braking resistor connection
	X2:+R	+R	
	⏚	PE	Protective earth connection

33955948/EN – 05/2026

Size 0L 3-phase

Terminal	Contact	Function	
	X1:L1	L1	Supply system connection
	X1:L2	L2	
	X1:L3	L3	
	⏚	PE	Protective earth connection
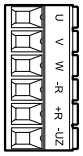	X2:U	V	Motor connection
	X2:V	V	
	X2:W	W	
	X2:-R	-R	Braking resistor connection
	X2:+R	+R	
	X2:-U_Z	-U_Z	DC link connection[1)]
	⏚	PE	Protective earth connection

1) Connect the DC link +VZ at +R.

Size 3

Terminal	Contact	Function	
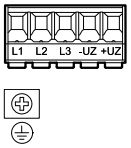	X1:L1	L1	Supply system connection
	X1:L2	L2	
	X1:L3	L3	
	X1:-U_Z	-U_Z	DC link connection
	X1:+U_Z	+U_Z	
	⏚	PE	Protective earth connection
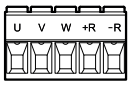	X2:U	V	Motor connection
	X2:V	V	
	X2:W	W	
	X2:+R	+R	Braking resistor connection
	X2:-R	-R	
	⏚	PE	Protective earth connection

Size 4

Terminal	Contact	Function	
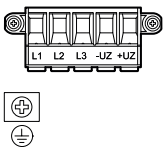	X1:L1	L1	Supply system connection
	X1:L2	L2	
	X1:L3	L3	
	X1:-U_Z	-U_Z	DC link connection
	X1:+U_Z	+U_Z	
	⏚	PE	Protective earth connection

Terminal	Contact	Function	
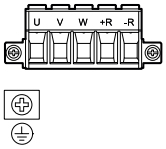	X2:U	V	Motor connection
	X2:V	V	
	X2:W	W	
	X2:+R	+R	Braking resistor connection
	X2:-R	-R	
	⏚	PE	Protective earth connection

Sizes 5 – 8

Terminal	Contact	Function	
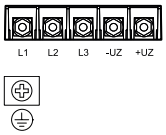	X1:L1	L1	Supply system connection
	X1:L2	L2	
	X1:L3	L3	
	X1:-U_Z	-U_Z	DC link connection on rectifier side
	X1:+U_Z	+U_Z	
	⏚	PE	Protective earth connection
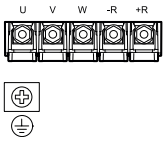	X2:U	U	Motor connection
	X2:V	V	
	X2:W	W	
	X2:-R	-R	Braking resistor connection
	X2:+R	+R	
	⏚	PE	Protective earth connection

Sizes 7 – 8

Terminal	Contact	Function	
	-U_Z*	-U_Z	DC link connection capacitor side
	+U_Z*	+U_Z	

All inverters

Terminal	Contact	Function	
	X5:24 V	24V_in	DC 24 V supply voltage
	X5:GND	GND	Reference potential
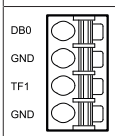	DB0/DB00	DB00	Brake control
	X10:GND	GND	Reference potential
	X10:TF1	TF1	Sensor input for temperature evaluation of the motor
	X10:GND	GND	Reference potential

33955948/EN – 05/2026

Terminal	Contact	Function	
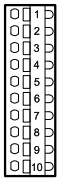	X20:1	DI01	Digital input 1
	X20:2	DI02	Digital input 2
	X20:3	DI03	Digital input 3
	X20:4	DI04	Digital input 4
	X20:5	DI05	Digital input 5
	X20:6	DI06	Digital input 6
	X20:7	VO24	DC 24 V voltage output
	X20:8	GND	Reference potential
	X20:9	DIO01	Digital input/output
	X20:10	DIO02	Digital input/output
	X22:1	DOR-C	Shared relay contact
	X22:2	DOR-NO	NO contact
	X22:3	DOR-NC	NC contact
	X23:1	REF1	Reference voltage
	X23:2	AI1	Analog input voltage or current (can be selected via S4)
	X23:3	GND	Reference potential
	X23:4	AIO1	Analog input/output

Inverter with fieldbus

Terminal	Contact	Function
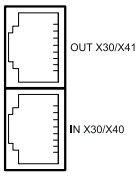	OUT X30/ X41	- System bus OUT X30/IN X30 with MCX91A-..-S00 – EtherCAT® OUT X30/IN X30 with MCX91A-..-E00
	IN X30/X40	- PROFINET X40/X41 with MCX91A-..-T00/CFN and -T0./../CFNB – Ethernet X40/X41 with MCX91A-..-T00/CFE – POWERLINK/CiA402 X40/X41 with MCX91A-..-L0../CFL

Inverter with CSO

Terminal	Contact	Function	
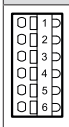	X6:1	F_STO_P	F_STO_P: DC +24 V input
	X6:2	F_STO_M	F_STO_M: DC 0 V input
	X6:3	F_STO_P	F_STO_P: DC +24 V input
	X6:4	F_STO_M	F_STO_M: DC 0 V input
	X6:5	VO24_STO[1)]	F_STO_P: 24 V DC supply
	X6:6	GND	Reference potential

1) The VO24_STO auxiliary voltage output only supplies voltage when the line voltage is applied to the inverter.

Inverter with CSB/CSL/CSS

Terminal	Contact	Function	
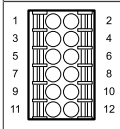	X60:1	F-DI00	Safe digital input F-DI00
	X60:2	F-DI01	Safe digital input F-DI01
	X60:3	GND	Reference potential for safe digital inputs/outputs
	X60:4	GND	Reference potential for safe digital inputs/outputs
	X60:5	F-DI02	Safe digital input F-DI02
	X60:6	F-DI03	Safe digital input F-DI03
	X60:7	GND	Reference potential for safe digital inputs/outputs
	X60:8	GND	Reference potential for safe digital inputs/outputs
	X60:9	F-SS0	DC 24 V voltage supply of the sensor for safe digital inputs F-DI00 and F-DI02
	X60:10	F-SS1	DC 24 V sensor voltage supply for safe digital inputs F-DI01 and F-DI03
	X60:11	F-DO00_M	Safe digital output F-DO00_M (not with CSB)
	X60:12	F-DO00_P	Safe digital output F-DO00_P (not with CSB)

Inverter with MOVILINK® DDI

Terminal	Contact	Function	
	X16	Coaxial connection	MOVILINK® DDI

Inverter with CSL/CSS

Terminal	Contact	Function	
	X18	Mini IO	Connection of encoder for EI7C FS

10.16 Electrical installation – functional safety

10.16.1 Important information



⚠ WARNING

The external jumper plug X6 is plugged into the unit or a voltage is connected, although a MOVISAFE® CS..A safety option is installed in the unit.

Severe or fatal injuries.

- The jumper plug X6 has no function if a MOVISAFE® CS..A safety option is installed in the unit.

33955948/EN – 05/2026

10.16.2 Installation instructions

⚠ WARNING

Only the types of connection described in this documentation may be used.

Severe or fatal injuries.

- Non-compliant connection variants specified in other documentation are not permissible.

10.16.3 Safe disconnection

The connection X6 has no function if a MOVISAFE® CS..A safety option is installed in the unit.

10.16.4 Connection examples for safe digital inputs (F-DI..)

Contact-equipped sensors (one-channel)

A single-channel sensor is connected via the sensor supply F-SS0 or F-SS1. The sensor cycle available there makes it possible for crossfaults in the wiring to be detected. Note the detailed "assignment" (→ 🗎 354) of F-DI.. to the sensor supply F-SS0 or F-SS1.

Settings in the "Assist CS.." parameterization tool:

- Choose the single-channel connection type.
- Depending on the requirement with respect to safety technology, activate or deactivate the line diagnostics and pulsed voltage supply of the sensor supply.

The following figure shows the MOVISAFE® CS..A safety option with single-channel contact-equipped sensors:

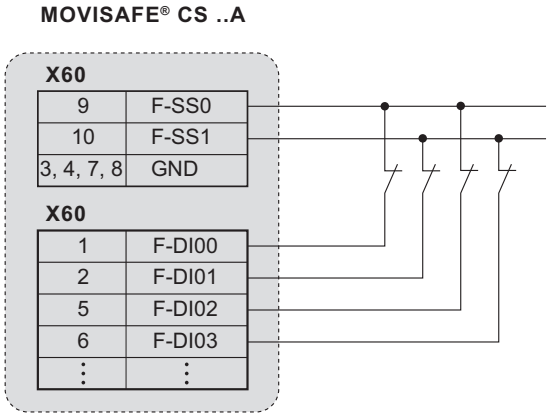

9007207666482571

Operation with activated line diagnostics

The following errors are detected:

- Crossfault between every digital input line F-DI.. and a 24 V supply voltage.
- Crossfault between a digital input line F-DIx and another digital input line F-DIy, which is assigned to another sensor supply, if at least the associated switch contact of the other digital input F-DIy is closed.
- Crossfault between a digital input line F-DI.. and a sensor supply line not assigned to the input F-DI..

- Crossfault between a sensor supply line F-SS.. and a 24 V supply voltage if the digital input F-DI.. is assigned to the sensor supply and the switch contact belonging to F-DI.. is closed.
- Crossfault between the sensor supply lines F-SS.. themselves if the switch contact belonging to the digital input F-DI.. is closed.



⚠ WARNING

The MOVISAFE® CS..A safety option **cannot** detect a short circuit between a sensor supply F-SS.. and an associated safe input F-DI..

Death or serious injury.

- Make sure that no short circuit between the sensor supply F-SS.. and an associated safe input F-DI.. is possible.



⚠ WARNING

If line diagnostics is deactivated, the MOVISAFE® CS..A safety option **cannot** detect crossfaults in the cabling. This configuration is **not** permitted for safe applications without further measures.

Death or serious injury.

- A single-channel sensor with line diagnostics can achieve a category 2 structure according to EN ISO 13849-1.

Contact-equipped sensors (two-channel)

A two-channel sensor with contacts is connected via the sensor supply F-SS0 and F-SS1. Note the detailed "assignment" (→ 🗎 354) of the safe digital inputs (F-DI..) to the sensor supply F-SS0 and F-SS1.

Settings in the "Assist CS.." parameterization tool:

- Choose the two-channel connection type.
- Activate or deactivate line diagnostics and pulsed sensor supply, depending on the safety requirements.

The following figure shows the MOVISAFE® CS..A safety option with two-channel contact-equipped sensors in the connection variants "non-equivalent" and "equivalent":

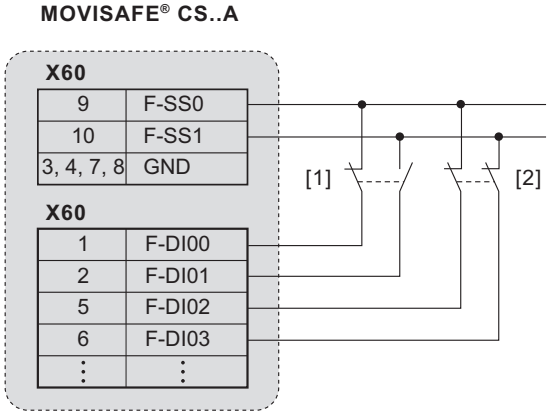

18014406921227019

[1] Two-channel contact-equipped sensor in "non-equivalent" connection variant
[2] Two-channel contact-equipped sensor in "equivalent" connection variant

Operation with activated line diagnostics

3955948/EN – 05/2026

The following errors are detected:

- Crossfault between every digital input line F-DI.. and a 24 V supply voltage
- Crossfault between a digital input line F-DIx and another digital input line F-DIy, which is assigned to another sensor supply, if at least the associated switch contact of the other digital input F-DIy is closed
- Crossfault between a digital input line F-DI.. and a sensor supply line not assigned to the input F-DI..
- Crossfault between a sensor supply line F-SS.. and a 24 V supply voltage if the digital input F-DI.. is assigned to the sensor supply and the switch contact belonging to F-DI.. is closed
- Crossfault between the sensor supply lines F-SS.. themselves if the switch contact belonging to the digital input F-DI.. is closed

Operation without line diagnostics

When using a two-channel, non-equivalent-switching sensor, the MOVISAFE® CS..A safety option can detect a crossfault between the two digital inputs of an input pair.

⚠ WARNING



The MOVISAFE® CS..A safety option **cannot** detect a short circuit between an F-SS.. sensor supply and an associated safe digital input F-DI.. (sensor jumpered).

Death or serious injury.

- Make sure that a short circuit between the sensor supply F-SS.. and an associated safe digital input F-DI.. is not possible.

⚠ WARNING



If line diagnostics is deactivated and a two-channel, equivalent-switching sensor is used, the MOVISAFE® CS..A safety option **cannot** detect crossfaults in the cabling.

Death or serious injury.

- Make sure that crossfaults are not possible at the safe digital inputs F-DI..

INFORMATION



Note that in the non-equivalent connection variant, the NC contact is connected to the sensor supply F-SS0.

Active sensors (two-channel)

When connecting a two-channel sensor with additional voltage supply, the voltage is supplied via an external DC 24 V power supply unit. The voltage supplies for the sensor outputs are connected to the sensor supply F-SS0 and F-SS1. The safe outputs of the sensor are connected with two channels to the respective safe digital inputs (F-DI..) at terminal X60. Note the detailed "assignment" (→ 🗎 354) of the safe digital inputs (F-DI..) to the sensor supply F-SS0 and F-SS1.

Settings in the "Assist CS.." parameterization tool:

- Choose the two-channel connection type (equivalent/non-equivalent).
- Activate or deactivate the pulsed sensor voltage supply, depending on the safety requirements.
- Parameterize the permitted discrepancy time between the two input signals of the sensor you are using.

33955948/EN – 05/2026

The following figure shows the MOVISAFE® CS..A safety option with an active sensor (two-channel).

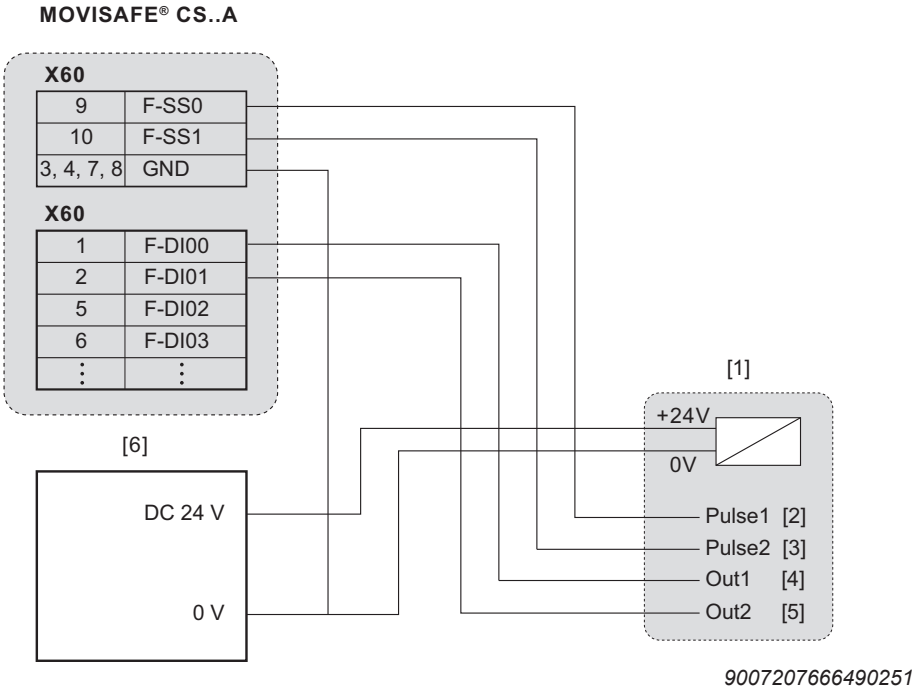

9007207666490251

[1] Active two-channel sensor
[2] Supply of output 1 (Out1)
[3] Supply of output 2 (Out2)
[4] Safe digital output 1
[5] Safe digital output 2
[6] External DC 24 V voltage supply

Operation with activated line diagnostics

The following errors are detected:

- Crossfault between every digital input line F-DI.. and a 24 V supply voltage.
- Crossfault between a digital input line F-DIx and another digital input line F-DIy, which is assigned to another sensor supply, if at least the associated switch contact of the other digital input F-DIy is closed.
- Crossfault between a digital input line F-DI.. and a sensor supply line not assigned to the input F-DI..
- Crossfault between a sensor supply line F-SS.. and a 24 V supply voltage if the digital input F-DI.. is assigned to the sensor supply and the switch contact belonging to F-DI.. is closed.
- Crossfault between the sensor supply lines F-SS.. themselves if the switch contact belonging to the digital input F-DI.. is closed.

⚠ WARNING



The MOVISAFE® CS..A safety option **cannot** detect a short circuit between an F-SS.. sensor supply and an associated safe digital input F-.. (sensor jumpered).

Death or serious injury.

- Make sure that a short circuit between the sensor supply F-SS.. and an associated safe digital input F-DI.. is not possible.

3955948/EN – 05/2026

⚠ WARNING

If line diagnostics is deactivated, the MOVISAFE® CS..A safety option **cannot** detect crossfaults in the cabling.

Death or serious injury.

- Make sure that crossfaults are not possible at the safe digital inputs F-DI.., or that they can be detected by the sensor.

Sensors with semiconductor outputs (OSSD, two-channel)

When connecting an OSSD sensor, make sure that the pulsed voltage supply is deactivated.

INFORMATION

Deactivate line diagnostics at the respective safe inputs of the OSSD-capable sensor technology.

OSSD-capable sensor technology tests and diagnoses the OSSD outputs on its own. The errors detected in the cabling depend on the diagnostic function of the sensor in use.

For OSSD-capable sensors, the following two connection variants result (example):

Variant 1

If sensors with contacts are used in addition to sensors with OSSD-capable outputs and if line diagnostics must be used for th sensors with contacts, the OSSD-capable sensor can be supplied via an external voltage supply.

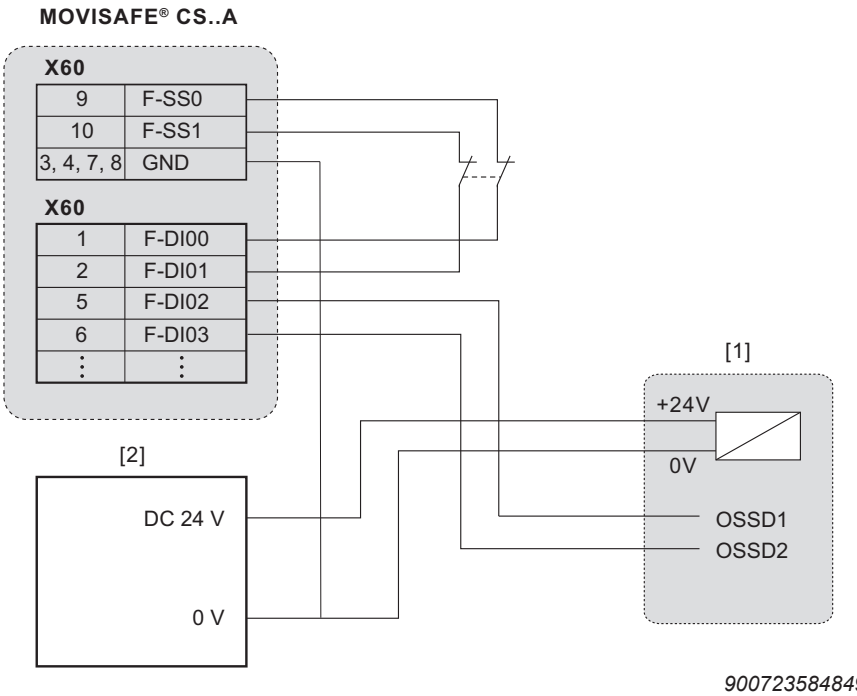

[1] OSSD-capable sensor (e.g. scanner or light grid)
[2] External DC 24 V voltage supply

Variant 2

If only OSSD sensors are used, the voltage can also be supplied via terminals F-SS0 and F-SS1. In this case, deactivate the pulsed sensor voltage supply (F-SS0 and F-SS1) in the "Assist CS.." parameterization tool.

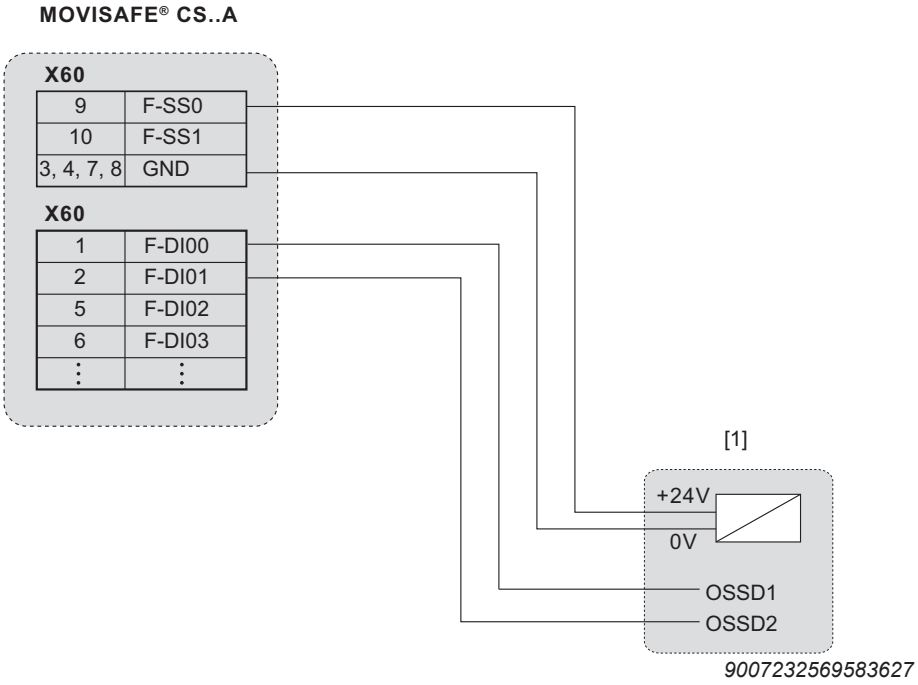

[1] OSSD-capable sensor (e.g. scanner or light grid)

INFORMATION

The performance level that can be achieved is mainly determined by the OSSD sensors used.

Use the external voltage supply for sensors that have a higher current consumption than the F-SS.. sensor supply lines can provide.

10.16.5 Connection examples for safe digital output

Actuator (two-channel, sourcing/sinking output)

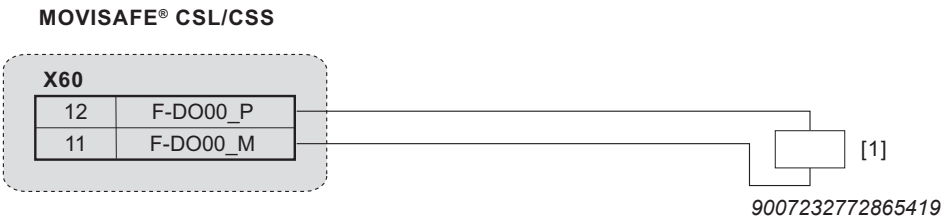

[1] Actuator 1

33955948/EN – 05/2026

Connect the actuator between F-DO00_P and F-DO00_M. The actuator can still be switched off in case of a crossfault in one of the connection leads, because the MOVISAFE® CSL/CSS safety option disconnects the sourcing and the sinking output terminal.

The input of the actuator must be isolated and without any connection to a reference potential. Inside the MOVISAFE® CS..A safety option there is a switching element between F-DO._M and the reference potential. With a non-floating actuator, this switching element would be bridged. The redundancy of the sourcing and sinking output would no longer apply.

The sourcing/sinking output connection variant is suitable for applications up to SIL 2 according to EN 61508 and Performance Level d according to EN ISO 13849-1.

Fault detection using line diagnostics

The MOVISAFE® CS..A safety option detects the following faults in the external cabling when the output is disabled or enabled:

- Short circuit between sourcing output and a supply voltage that lies within the range of 15 to 30 V and has the same ground potential as the MOVISAFE® CS..A safety card.
- Short circuit between the sinking output and the reference potential or a voltage < 6 V.

The MOVISAFE® CS..A safety option can also detect the following faults when the output is enabled:

- Short circuit between different sourcing outputs
- Short circuit between different sinking outputs
- Short circuit between sourcing and sinking output
- Short circuit between sourcing output and GND
- Overload on each output
- Open circuit (with F-DO., if activated)

INFORMATION

In the event of short circuits, a high short-circuit current can occur for a short time. Depending on the DC 24 V supply voltage used, this can cause a voltage drop that affects the operation of MOVITRAC® advanced and/or individual assemblies.

If the voltage supply is not stable enough, it can result in a reset and a restart of the MOVISAFE® CS..A safety option.

- Make sure the voltage supply does not break down in the event of short circuits at the output.

Actuator (one-channel, sourcing output)

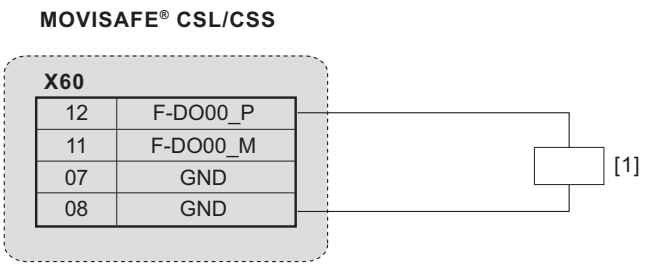

9007232772869771

[1] Actuator 1

Connect the actuator between F-DO00_P and the GND reference potential.

The input of the actuator does not have to be zero potential.

The sourcing output connection variant is suitable for applications up to SIL 2 pursuant to EN 61508 and performance level d pursuant to EN ISO 13849-1.

The MOVISAFE® CS..A safety option detects the following faults in the external cabling when the output is disabled or enabled:

- Short circuit between sourcing output and a supply voltage that lies within the range of 15 to 30 V and has the same ground potential as the assembly.

The MOVISAFE® CS..A safety option can also detect the following faults when the output is enabled:

- Short circuit between different sourcing outputs
- Short circuit between sourcing output and reference potential 0 V
- Overload at each output
- Wire break F-DO (if activated)

⚠ WARNING



In the event of a short-circuit fault between the sourcing output and a 24 V supply voltage, the MOVISAFE® CS..A safety option can no longer disable the actuator and cannot change to the safe state.

The line diagnostics function can detect the fault. However, the MOVISAFE® CS..A safety option cannot enter a safe state as there is no redundant switch-off channel in this connection variant.

Severe or fatal injuries.

- Route the cables in such a way that no short circuit can occur between the sourcing output and a +24 V supply voltage.
- Make sure that an additional redundant switch-off channel exists for the actuator (e.g. by using a second sourcing output).

INFORMATION



If possible, SEW-EURODRIVE recommends a sourcing/sinking output connection or the use of 2 parallel, sourcing outputs.

For more information about safe outputs, see chapter "Technical data".

INFORMATION



In the event of short circuits, a high short-circuit current can occur for a short time. Depending on the 24 V supply voltage used, this can cause a voltage drop that affects the operation of MOVITRAC® advanced and/or individual assemblies.

If the voltage supply is not stable enough, it can result in a reset and a restart of the MOVISAFE® CS..A safety option.

- Make sure the DC 24 V voltage supply does not break down in the event of short circuits at the output.

33955948/EN – 05/2026

10.16.6 EI7C FS built-in encoder

Properties

The EI7C FS built-in encoder is a safe incremental encoder with 24 signal periods per revolution.

The EI7C FS built-in encoder may be used with MOVISAFE® CS..A.

MOVISAFE® CS..A can detect a minimum speed of 60 min^{-1} in connection with an EI7C FS built-in encoder.

MOVISAFE® CS..A evaluates the signal of the EI7C FS built-in encoder.

MOVISAFE® CS..A and the EI7C FS built-in encoder monitor the encoder signal. The MOVISAFE® CS..A safety option detects interruptions and crossfaults in the encoder line. If a fault occurs, MOVISAFE® CS..A activates the STO safety subfunction in the unit, and the torque is switched off safely.

Installation

Connect the built-in encoder EI7C FS to the X18 encoder interface of the unit using the encoder cable (part number 28118804).

⚠ WARNING



Incorrect wiring can disable the encoder function and monitoring features for the encoder.

Severe or fatal injuries.

- You may connect the EI7C FS built-in encoder only with the MOVISAFE® CSL or CSS safety option.
- You may only connect the encoder signals to the designated X15 encoder interface of the device. It is not permitted to connect other devices or assemblies.

INFORMATION



When connecting a built-in encoder EI7C FS to the unit, the encoder cable must not carry a TF signal.

10.16.7 Connection variants of the STO safety subfunction

General information

If the safety requirements from this documentation are met, then all connection variants listed in this documentation are generally permitted for safety-relevant applications. This means that you must ensure without fail that the DC 24 V safety inputs are activated by a safety controller or an external safety relay, so that an independent restart is not possible.

All the safety conditions stipulated in the chapters "Integrated safety technology", "Safety conditions", and "Connection variants" must be satisfied on a primary basis for the basic selection, installation, and application of the safety components such as safety relay, emergency stop switch, and the approved connection variants.

The wiring diagrams in chapter "Electrical installation" are block diagrams whose only purpose is to show the safety subfunction(s) with the relevant components. For reasons of clarity, circuit-related measures that always have to be implemented are not shown in the diagram. These measures are, e.g.:

- Ensuring the availability of touch guards.

33955948/EN – 05/2026

- Handling overvoltages and undervoltages.
- Avoiding insulation faults.
- Detecting ground faults or short circuits in externally installed lines.
- Guaranteeing the required interference immunity against electromagnetic interference.

Requirements

Using safety relays

The requirements of the manufacturers of safety relays (such as protecting the output contacts against welding) or of other safety components must be strictly observed. The basic requirements for cable routing apply as described in this documentation.

For connecting the device to the safety relays, observe the installation requirements in accordance with the chapter "Installation requirements" (→ 🗎 207).

All information from the manufacturer about the use of safety relays for specific applications must also be observed.

INFORMATION

If F_STO_P is connected to DC 24 V, and F_STO_M is connected to GND, STO is deactivated.

33955948/EN – 05/2026

Use of safety controllers

The switch-off test pulse of the used safe digital outputs (F-DO) must be ≤ 1 ms and another switch-off test pulse must only occur 2 ms later at the earliest.

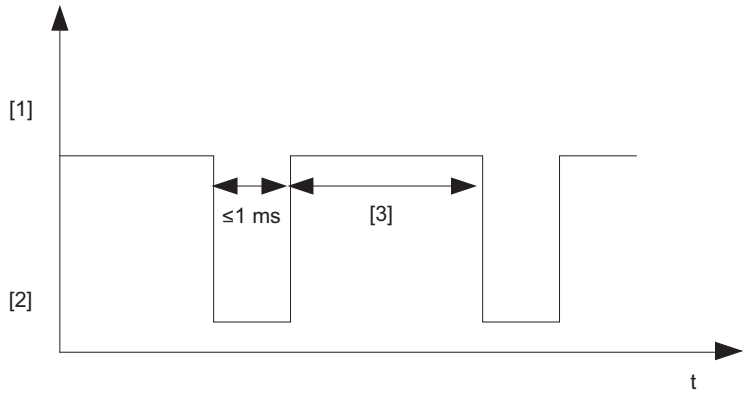

9007214469079819

[1] High
[2] Low

INFORMATION

- SEW-EURODRIVE recommends setting the dark tests (switch-off tests) to 0.8 ms due to tolerances in the safety controllers. Please refer to the description of your safety controller for where and how to set this time.
- If the safety-related control voltage at the STO connection is switched off (STO activated), chapter "Requirements for the external safety controller" (→ 🗎 211) must be observed with regard to the test pulses.
- If F_STO_P is connected to DC 24 V, and F_STO_M is connected to GND, STO is deactivated.

STO signal for group disconnection

For group drives, the STO signal may be provided for several devices by a single safety relay. The following requirements must be met:

- The total cable length is limited to max. 30 m. Other instructions published by the manufacturer on the use of the safety device (for the respective application) must also be observed.
- The maximum output current and the maximum permitted contact load of the safety device must be observed (see the product manual, chapter "Technical data" > "Electronic data – Safety subfunction").
- You must comply with the permitted signal levels at the STO input and all other technical data of the device. The routing of the STO control cables and the voltage drop must be considered.
- Other requirements of the safety manufacturer (such as protecting the output contacts against welding) must be strictly observed. The basic cable routing requirements apply.

33955948/EN – 05/2026

- A calculation based on the technical data of the device must be performed separately for each case of group disconnection.
- Due to the current carrying capacity, a maximum of 10 devices can be connected to one another via terminal X6. Additional parallel lines are permitted if the minimum voltage increase described in the technical data is adhered to.

Wiring diagrams of the connection variants

STO connection at terminal X6

For detailed information on terminal X6, refer to chapter "Electrical installation" > "Terminal assignment" (→ 🗎 349).

Delivery state

In the delivery state, the following terminals are bridged on STO connection X6:

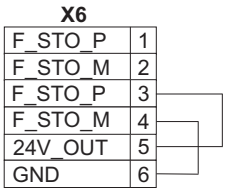

9007232451506315

Two-pole sourcing/sinking output

Example 1

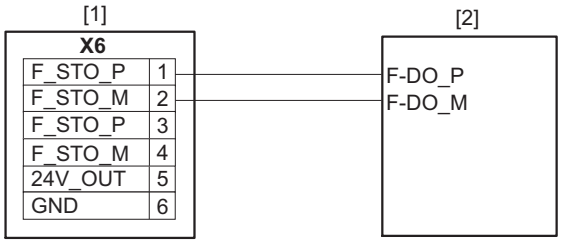

9007232451544331

[1] STO terminal X6
[2] External safety device

Example 2

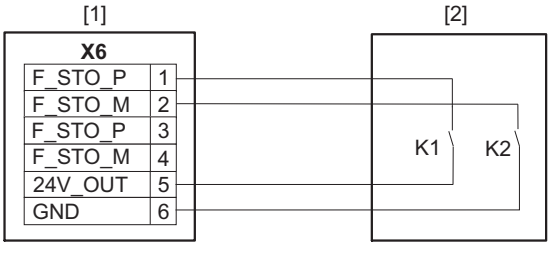

48770423179

[1] STO terminal X6
[2] External safety device

33955948/EN – 05/2026

INFORMATION

The supply voltage 24V_Out (X6:5) must not be used to supply the external safety device!

Single-pole sourcing output

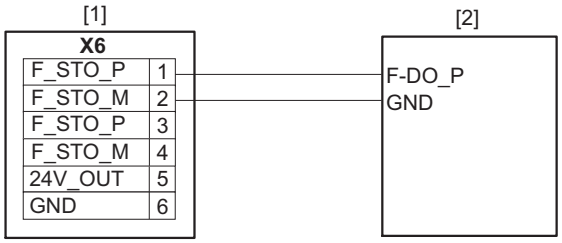

9007232451610251

[1] STO terminal X6
[2] External safety device

STO group disconnection, two-pole, sourcing/sinking output

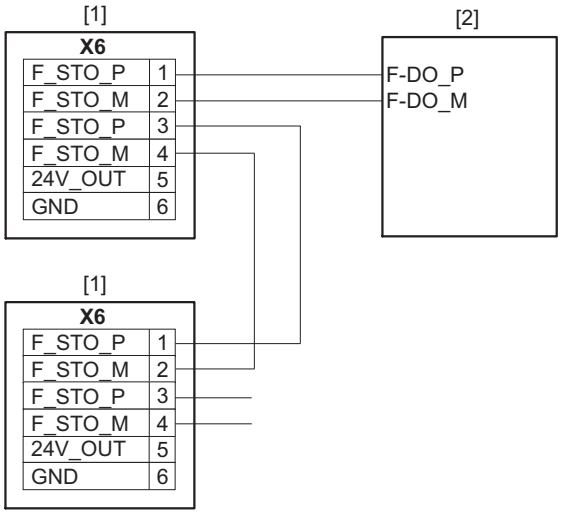

9007232451686795

[1] STO terminal X6
[2] External safety device

STO group disconnection, one-pole, sourcing output

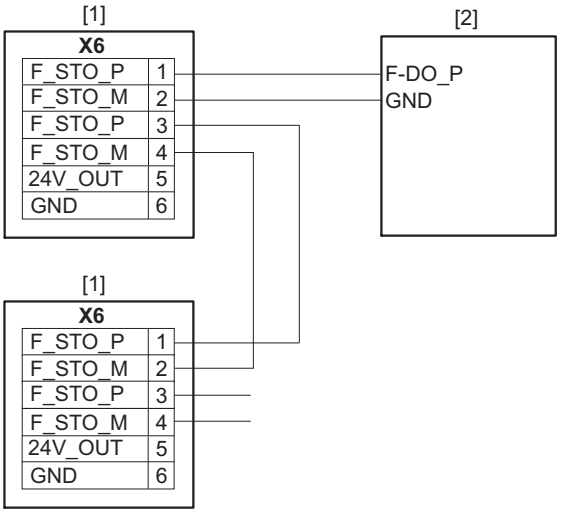

9007232451723915

[1] STO terminal X6
[2] External safety device

33955948/EN – 05/2026

10.17 Wiring diagrams

10.17.1 Power connection

Power connection with line contactor size 0S 3-phase

The following figure shows an example of the wiring of the power connections with line contactor, line choke, line filter and output choke or output filter.

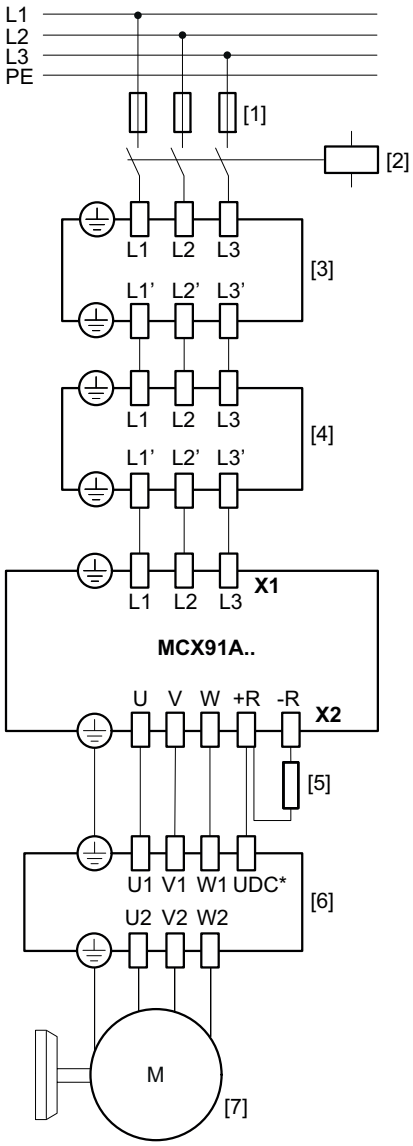

27021628890566027

* Only for HF.. output filter

[1] Fuses

[2] Line contactor

[3] Line choke (optional)

[4] Line filter (optional)

[5] Braking resistor (optional)

[6] Output choke or output filter (both optional)

[7] Motor

Power connection with line contactor size 0S 1-phase

The following figure shows an example of the wiring of the power connections with line contactor, line choke, line filter and output choke or output filter.

INFORMATION

The line choke must be used with the MCX91A-0110-2E1-.. inverter.

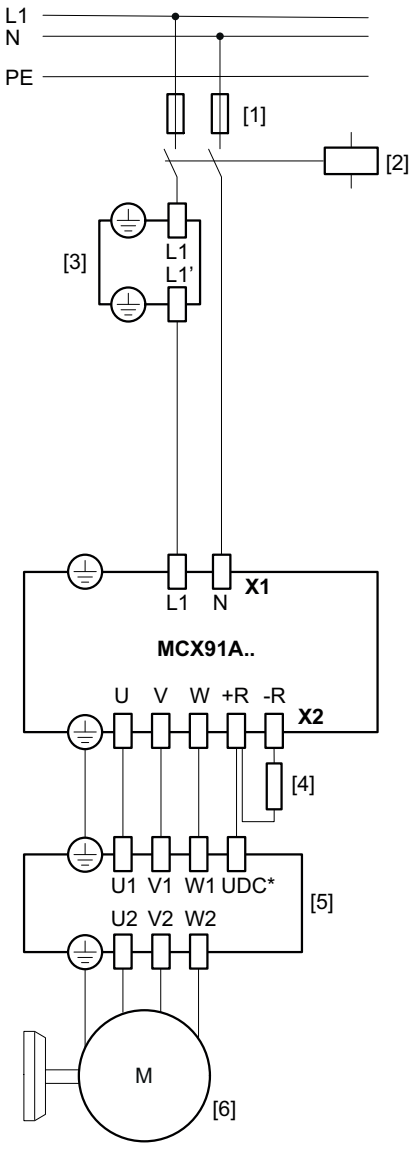

36028829551570571

* Only for HF.. output filter
[1] Fuses
[2] Line contactor
[3] Line choke (optional)
[4] Braking resistor (optional)
[5] Output choke or output filter (both optional)
[6] Motor

33955948/EN – 05/2026

Power connection with line contactor size 0L 3-phase

The following figure shows an example of the wiring of the power connections with line contactor, line choke, line filter and output choke or output filter.

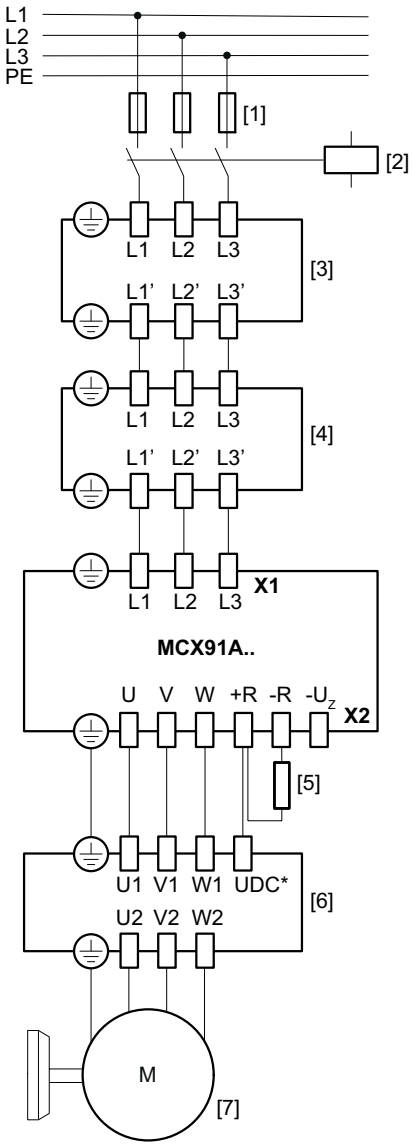

27021628668574987

* Only for HF.. output filter
[1] Fuses
[2] Line contactor
[3] Line choke (optional)
[4] Line filter (optional)
[5] Braking resistor (optional)
[6] Output choke or output filter (both optional)
[7] Motor

Power connection with line contactor size 0L 1-phase

The following figure shows an example of the wiring of the power connections with line contactor, line choke, line filter and output choke or output filter.

INFORMATION

The line choke must be used with the MCX91A-0110-2E1-.. inverter.

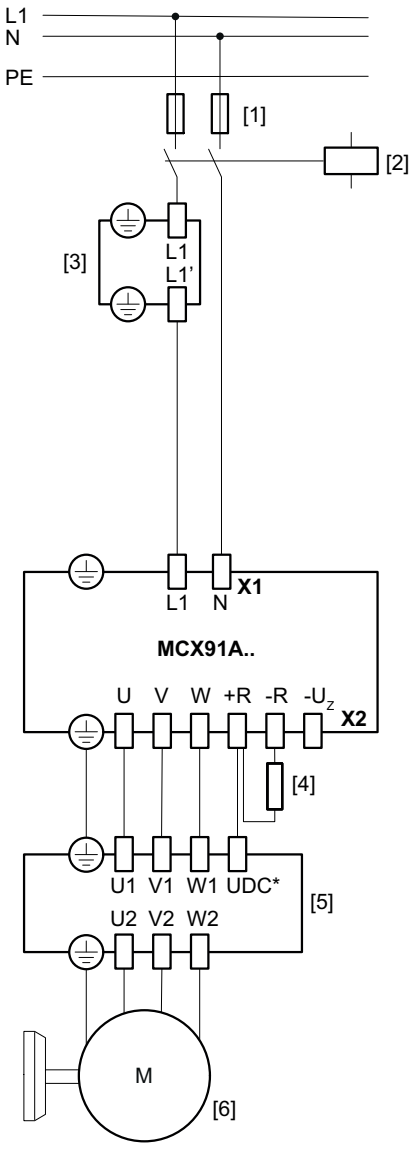

9007241504760971

* Only for HF.. output filter
[1] Fuses
[2] Line contactor
[3] Line choke (optional)
[4] Braking resistor (optional)
[5] Output choke or output filter (both optional)
[6] Motor

33955948/EN – 05/2026

Power connection with line contactor size 3 – 6

The following figure shows an example of the wiring of the power connections with line contactor, line choke, line filter and output choke or output filter.

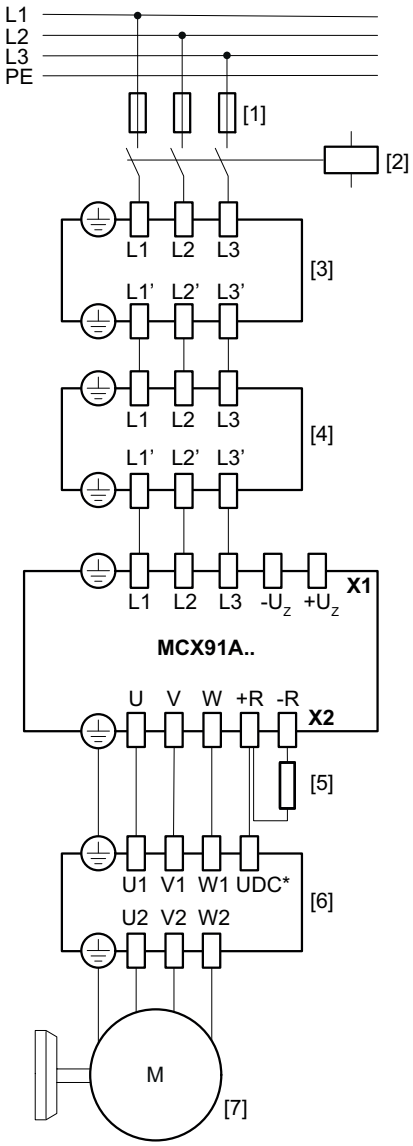

36028827423078411

* Only for HF.. output filter
[1] Fuses
[2] Line contactor
[3] Line choke (optional)
[4] Line filter (optional)
[5] Braking resistor (optional)
[6] Output choke or output filter (both optional)
[7] Motor

Power connection with line contactor size 7

The following figure shows an example of the wiring of the power connections with a line contactor, line choke, line filter and output choke.

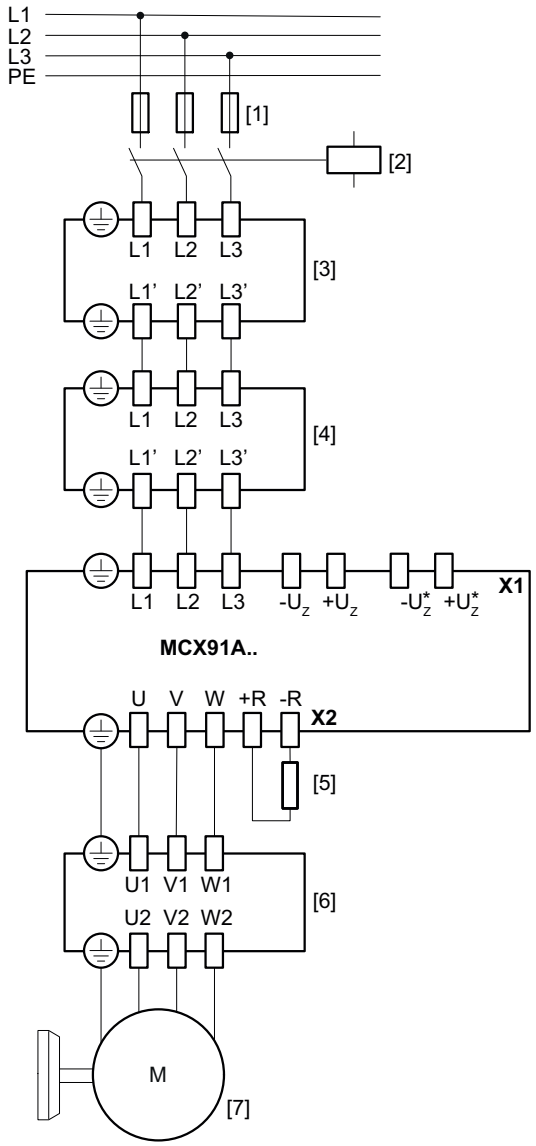

61965099019

[1] Fuses
[2] Line contactor
[3] Line choke (optional)
[4] Line filter (optional)
[5] Braking resistor (optional)
[6] Output choke (optional)
[7] Motor

33955948/EN – 05/2026

Power connection with line contactor size 8

The following figure shows an example of the wiring of the power connections with a line contactor, line choke, line filter and output choke.

All duplicate connections are connected internally. The wiring can therefore be connected to either one of the terminals or to both terminals.

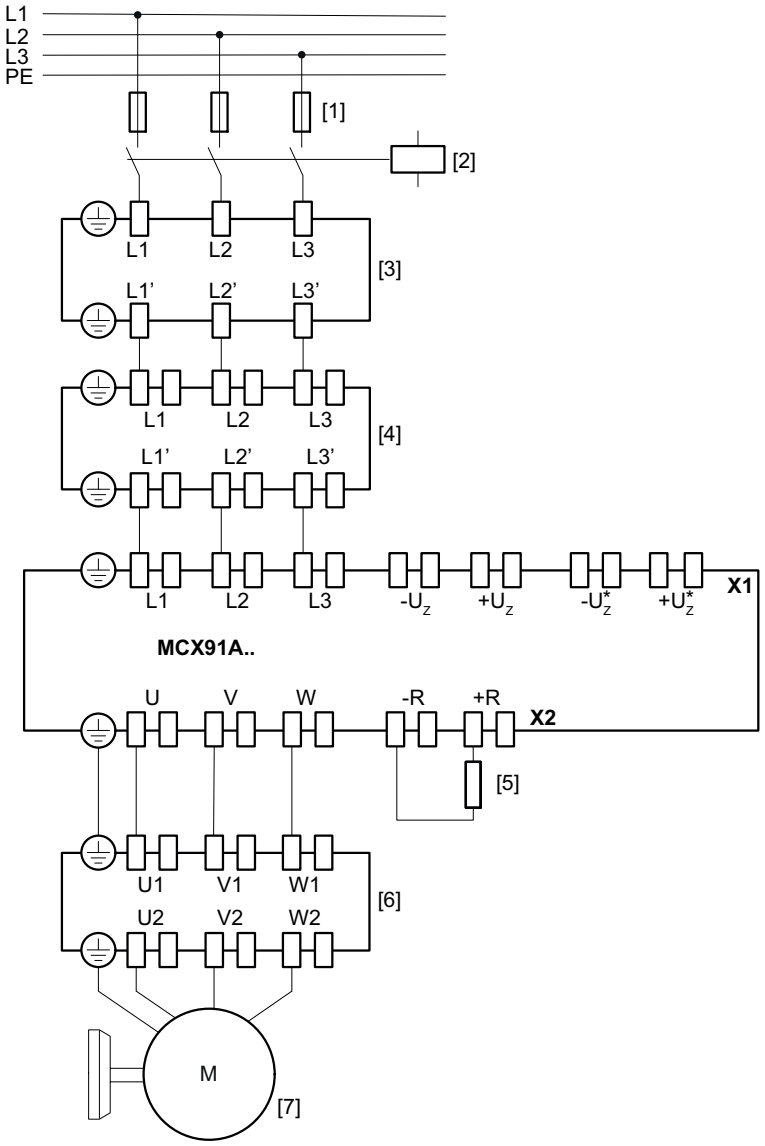

61691334795

[1] Fuses
[2] Line contactor
[3] Line choke (optional)
[4] Line filter (optional)
[5] Braking resistor (optional)
[6] Output choke (optional)
[7] Motor

Power connection without line contactor

NOTICE

Operation without line contactor

If the required measures are not taken, operation of an inverter with connected braking resistor without line contactor may result in severe damage to property.

- For the required measures as well as the inverters that can be operated without a line contactor, refer to the chapter "Using a line contactor" (→ 🗎 330).

10.17.2 Electronics connection

The functions assigned to the terminals and connectors depend on the device configuration:

- Without MOVIKIT® or parameters ex works (binary control), see chapter "Configuration for terminal mode" (→ 🗎 394).
- MOVIKIT® Velocity Drive, see chapter "Configuration for MOVIKIT® Velocity Drive" (→ 🗎 395).
- Parameters ex works, see chapter "Configuration for parameters ex works" (→ 🗎 395).

The following table shows the availability of terminals depending on the device variant. All spring-clamp terminals on the device are pluggable.

Terminal	Design	Description	Availability by device variant
X5	Cage clamp terminal	Input DC 24 V voltage supply	All variants
X6	Cage clamp terminal	STO terminal	../CSO/..
X10	Cage clamp terminal	Brake control and sensor input for temperature evaluation	All variants
X16	FAKRA	MOVILINK® DDI interface	../DI/..
X18	MINI-IO	EI7C FS encoder connection (optional)	../CSL/.. ../CSS/..
X20	Cage clamp terminal	Digital inputs and digital outputs	All variants
X22	Cage clamp terminal	Relay output	All variants
X23	Cage clamp terminal	Analog input and analog output	All variants
IN X30/X40	RJ45	System bus or fieldbus connection	-T0./../CFN/.. -T0./../CFE/.. -S0./.. -E00/.. -L00/../CFL/..
OUT X30/X41	RJ45		
X60	Cage clamp terminal	Safe digital inputs and digital outputs	../CSB/.. ../CSL/.. ../CSS/..

33955948/EN – 05/2026

Terminal	Design	Description	Availability by device variant
XM	Parameter memory	CMM11A memory module	Available as an option: ../.. ../CSO/.. Always included: ../CSB/.. ../CSL/.. ../CSS/..

33955948/EN – 05/2026

Signal terminal overview

The following figure shows an overview of the device's system terminals:

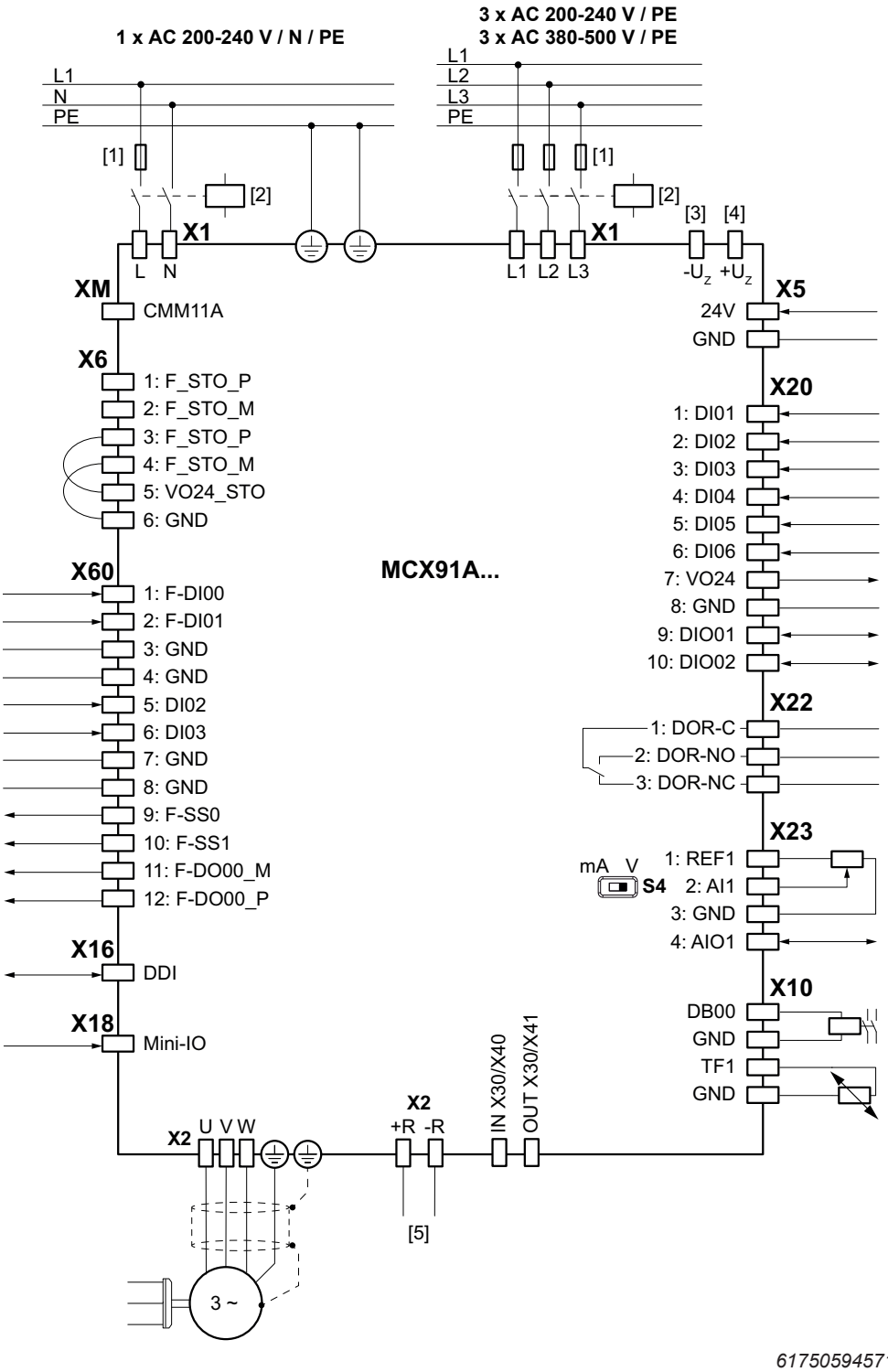

61750594571

[1] Line fuse
[2] Line contactor
[3] DC link connection $-U_z$ (only in size 0L, 3 – 8)
[4] DC link connection $+U_z$ (only in size 3 – 8)
[5] Braking resistor connection, see chapter "Protecting the braking resistors from thermal overload" (→ 🗎 345)

33955948/EN – 05/2026

Connection examples for analog input and analog output

Voltage input

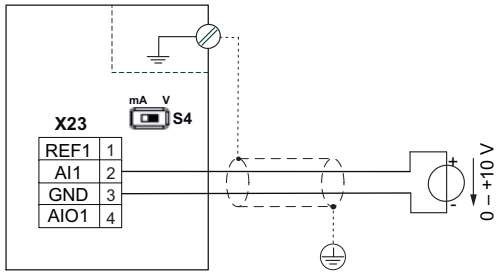

42852793355

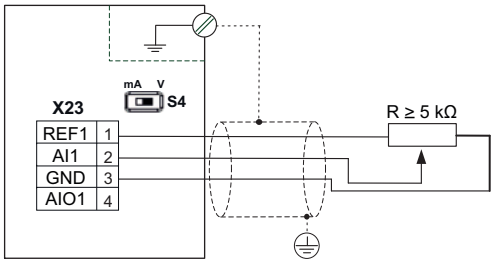

9007242107537675

The connection to terminal AIO1 as an analog input is carried out analogously to the connection to terminal AI1 shown in the wiring diagrams.

Current input

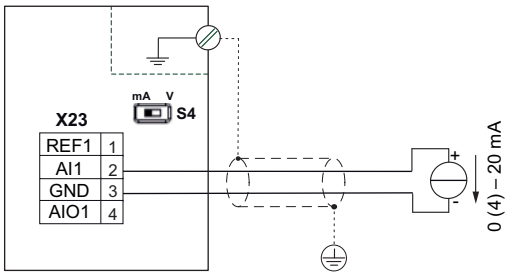

42852800011

Observe the position of DIP switch S4 when activating the current input. The current signal cannot be looped through to other devices.

Voltage output

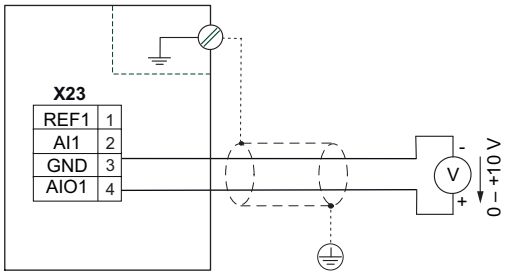

42852803339

10.17.3 Brake control connection

Key

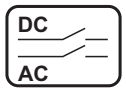

Cut-off in the DC and AC circuit
(rapid application of the brake)

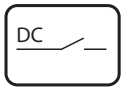

Cut-off in the DC circuit

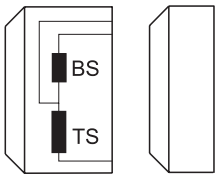

Brake
BS = Accelerator coil
TS = Coil section

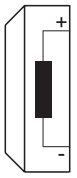

DC brake with one brake coil

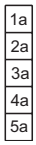

Auxiliary terminal strip in terminal box



Control cabinet limit

WH	White
RD	Red
BU	Blue
M	Motor

INFORMATION

The selection of the brake control and the shown connection diagrams only represent one of the many possibilities. Observe the operating instructions of the brake control.

33955948/EN – 05/2026

BMK brake control

The meaning of the symbols can be found in chapter "Key" (→ 🗎 380).

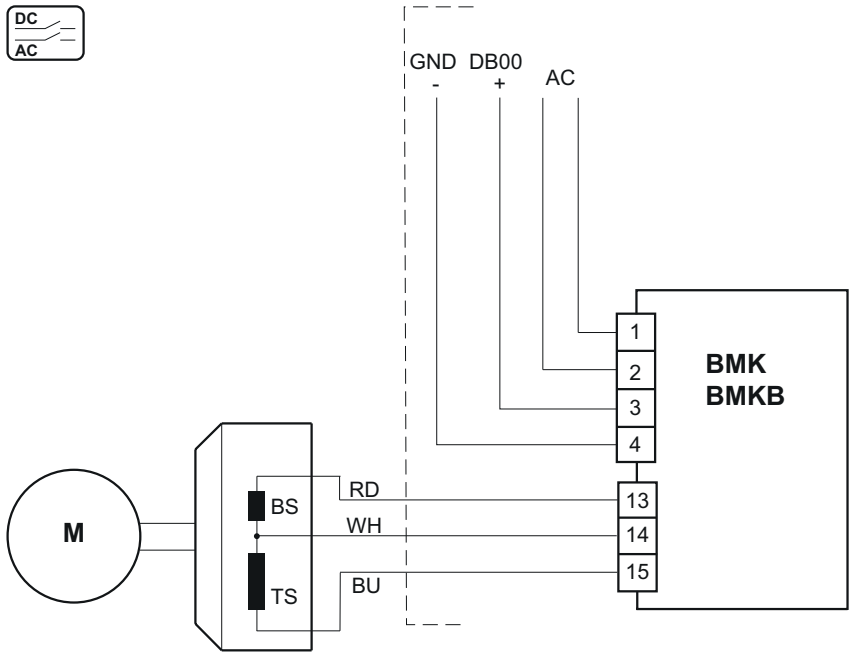

18014412833977739

BMV brake control – 2 coils

The meaning of the symbols can be found in chapter "Key" (→ 🗎 380).

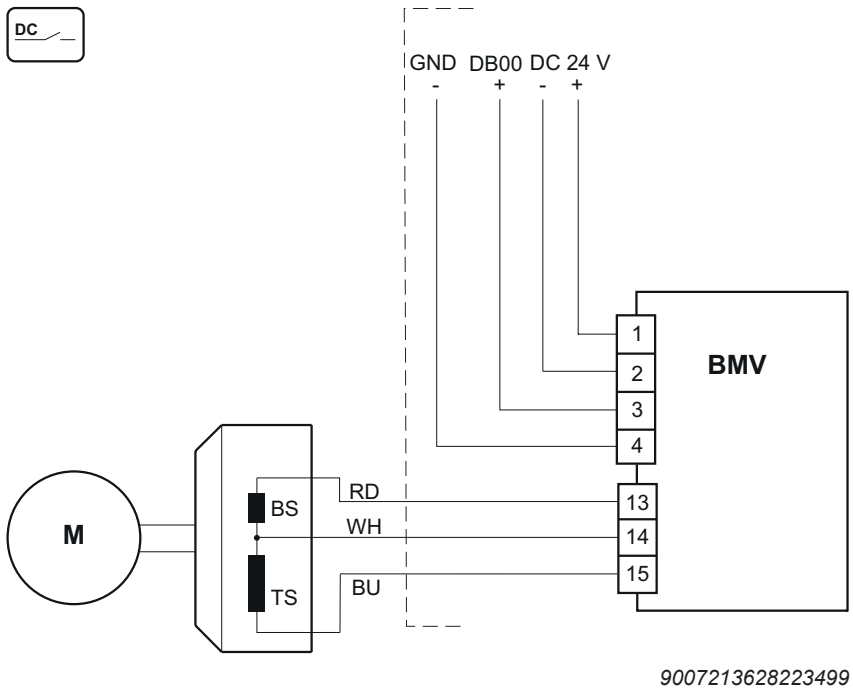

9007213628223499

BMV brake control – 1 coil

The meaning of the symbols can be found in chapter "Key" (→ 🗎 380).

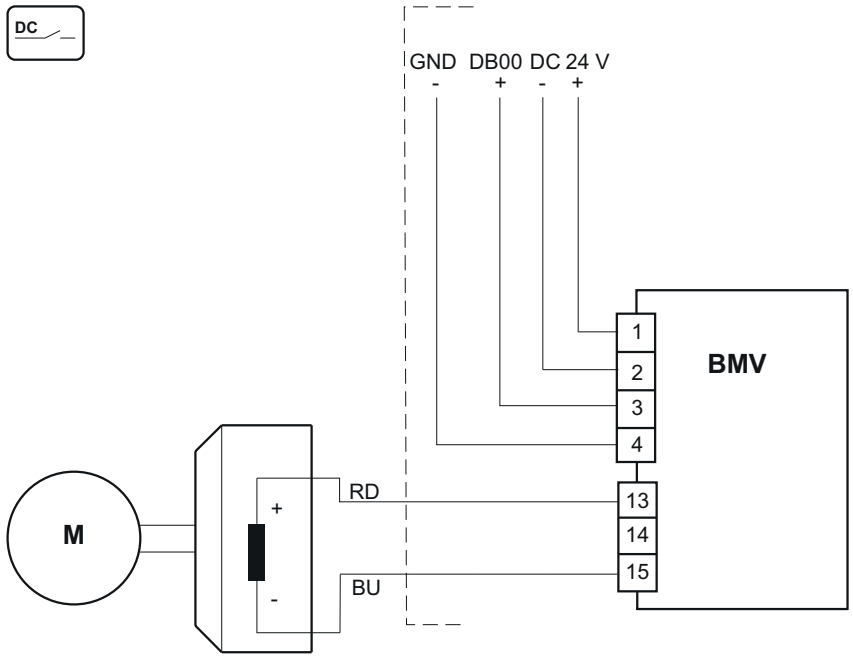

18014412882976907

BMS, BME brake control

The meaning of the symbols can be found in chapter "Key" (→ 🗎 380).

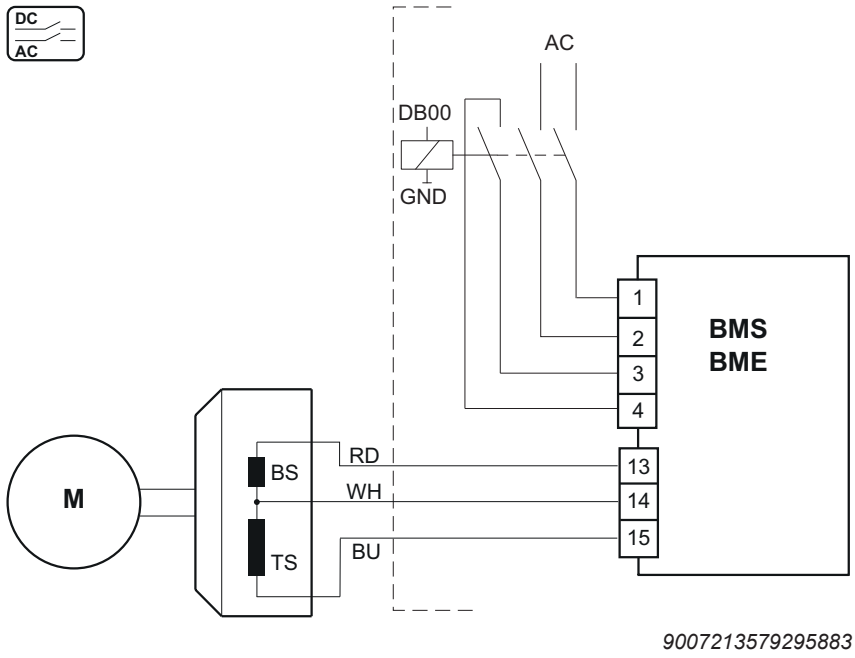

9007213579295883

33955948/EN – 05/2026

BMP brake control

The meaning of the symbols can be found in chapter "Key" (→ 🗎 380).

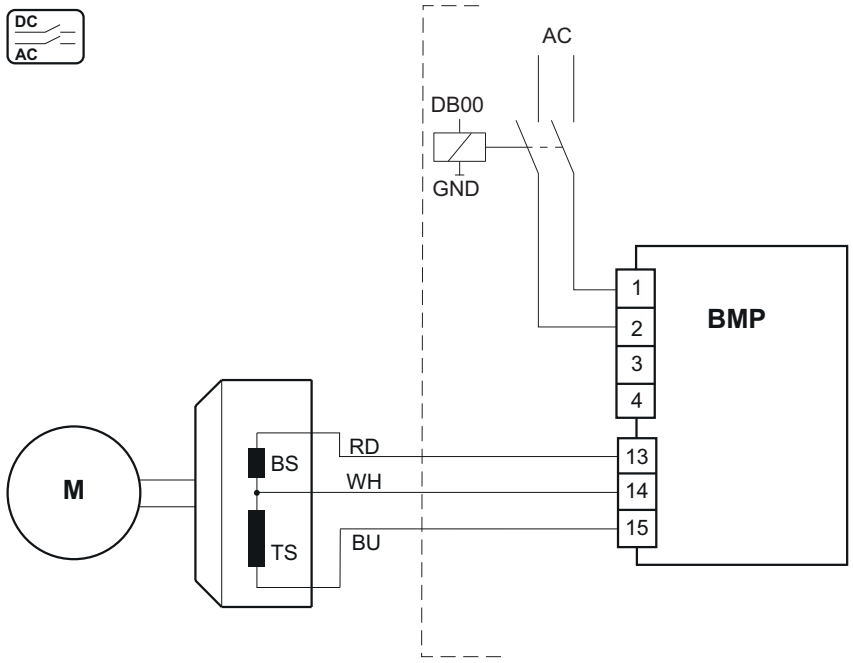

9007213579285515

BG, BGE brake control

The meaning of the symbols can be found in chapter "Key" (→ 🗎 380).

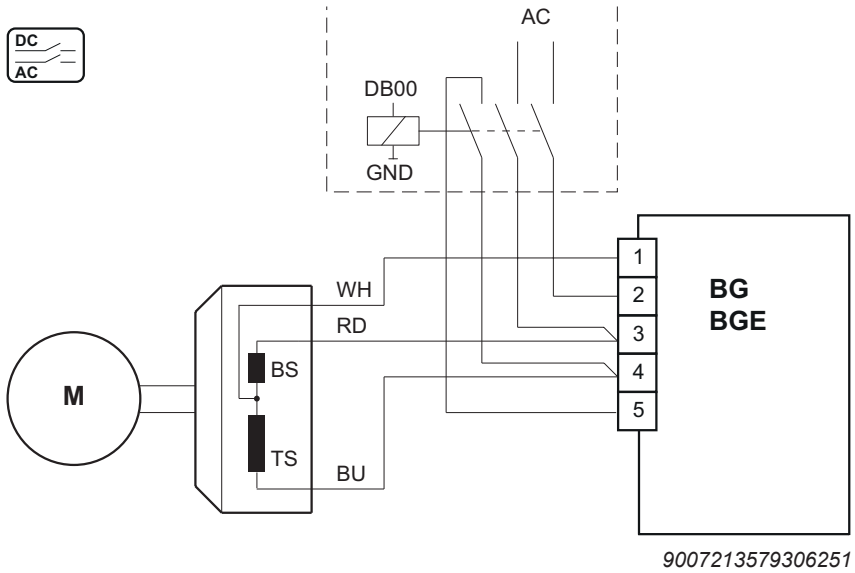

9007213579306251

33955948/EN – 05/2026

BSG brake control

The meaning of the symbols can be found in chapter "Key" (→ 🗎 380).

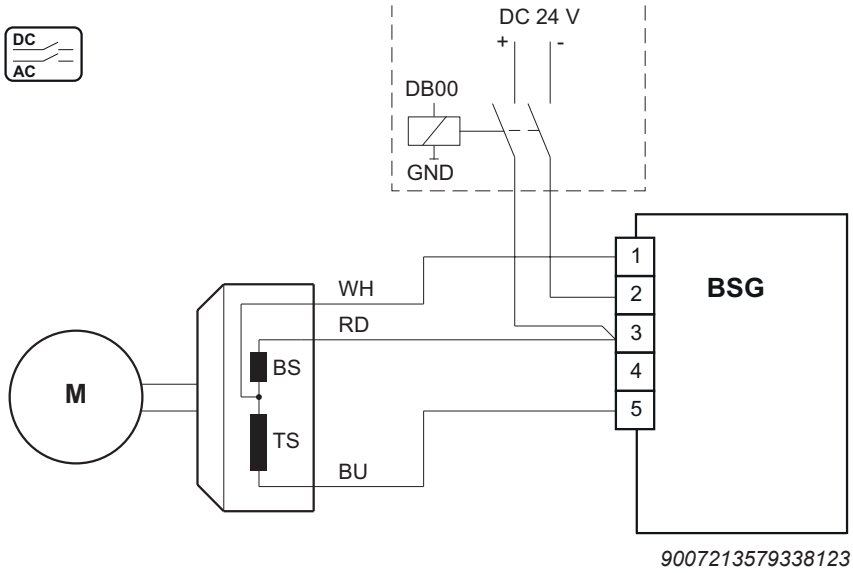

9007213579338123

SBM brake control with 1 control cable

The meaning of the symbols can be found in chapter "Key" (→ 🗎 380).

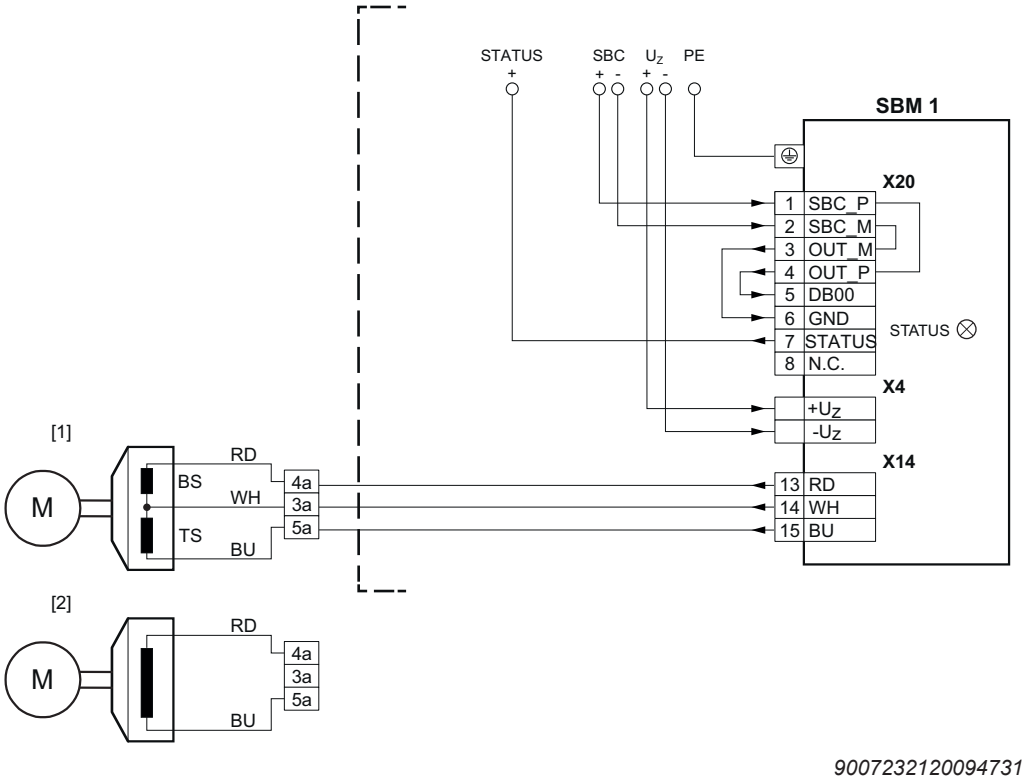

9007232120094731

[1] Connection of the brake with 3-wire technology (standard)

[2] Connection of the brake with 2-wire technology (optional). In this case, there is no connection from terminal X14:14 of the brake module to terminal 3a of the auxiliary terminal strip.

33955948/EN – 05/2026

SBM brake control with 2 control cables

The meaning of the symbols can be found in chapter "Key" (→ 🗎 380).

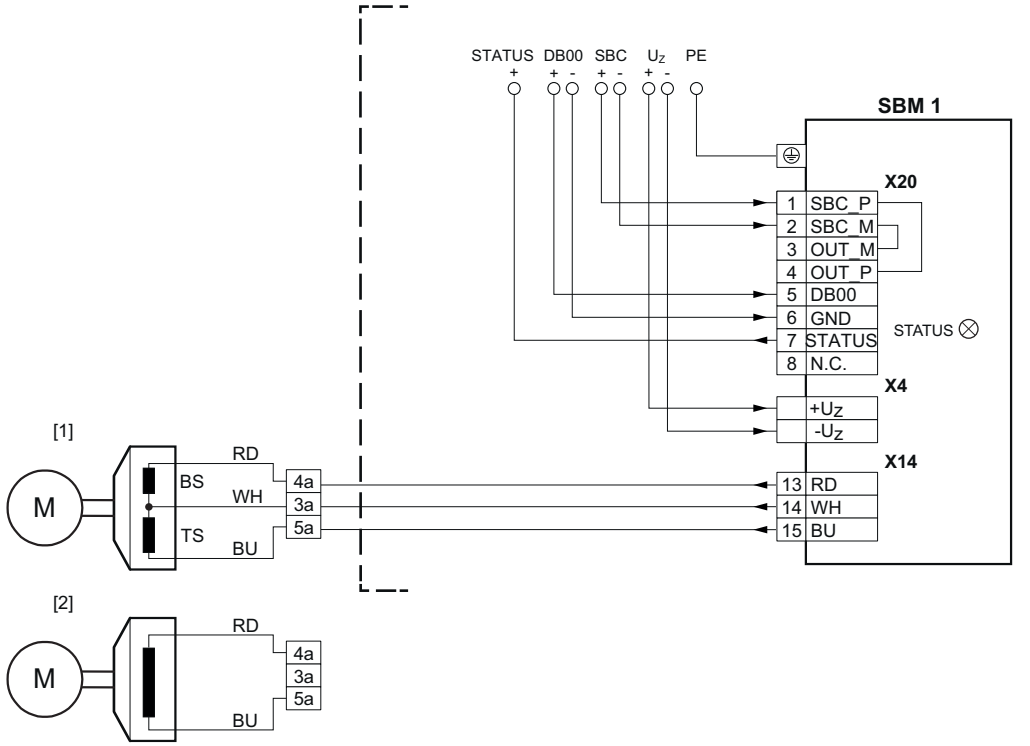

9007232118783115

[1] Connection of the brake with 3-wire technology (standard)

[2] Connection of the brake with 2-wire technology (optional). In this case, there is no connection from terminal X14:14 of the brake module to terminal 3a of the auxiliary terminal strip.

Brake control BG1Z, BS1Z, MOVILINK® DDI

For connection diagrams for the BG1Z and BS1Z, refer to the following documents:

- Addendum to the MOVILINK® DDI operating instructions for the respective motor
- MOVILINK® DDI product manual

10.18 PC connection

Connect the PC to the device before starting the MOVISUITE® engineering software. You have several connection options.

Observe the information in the **product manual** > chapter "Electrical installation" > "PC connection" including the subchapters.

10.18.1 Connection via MOVI-C® CONTROLLER as a compact controller

The MOVI-C® CONTROLLER serves as the EtherCAT®/SBus^{PLUS} MainDevice for the lower-level inverters (EtherCAT®/SBus^{PLUS} SubDevices). Communication takes place via the EtherCAT®-based fast system bus SBus^{PLUS}. The MOVI-C® CONTROLLER is connected to the engineering PC via the X80 engineering interface. Communication takes place via Ethernet.

For more information on connecting the engineering PC to the MOVI-C® CONTROLLER, refer to the operating instructions of the respective MOVI-C® CONTROLLER.

For the connection, you need an industrial-grade Ethernet connection cable RJ45/RJ45.

Connection example

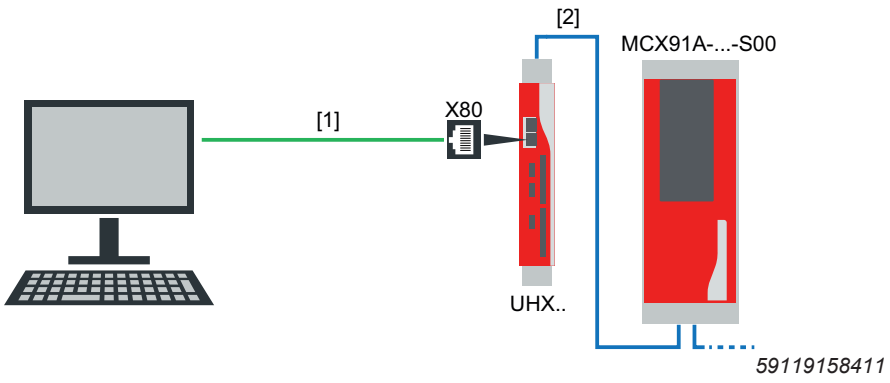

[1] Ethernet connection cable RJ45/RJ45, industry standard

[2] EtherCAT®/SBus^{PLUS} connection

10.18.2 Connection via USM21A interface adapter to CDM11A diagnostic module

For devices with a CDM11A diagnostic module, engineering is performed via the diagnostic module.

You can use the USM21A interface adapter to connect the PC to the X32 engineering interface of the device.

The connection is established via the X32 interface of the diagnostic module.

The data is transferred according to the USB 2.0 standard. It is also possible to work with a USB 3.0 interface.

You need the following components for the connection:

33955948/EN – 05/2026

Component	Part number
USM21A interface adapter The following connection cables are included in the scope of delivery: • USB 2.0 connection cable – USB type A/USB type B – Length: 1.5 m • RJ10/RJ10 connection cable for connecting to the X32 engineering interface – With 2 RJ10 connectors – Length: 3 m	28231449
RJ10/D-Sub9 connection cable for connecting to the X32 engineering interface • With RJ10 connector • With D-Sub9, female • Length: 1.5 m	18123864
CDM11A diagnostic module	28265092

Connection example

The X32 engineering interface is located on the front of the diagnostic module. To establish the connection, remove the cover on the front.

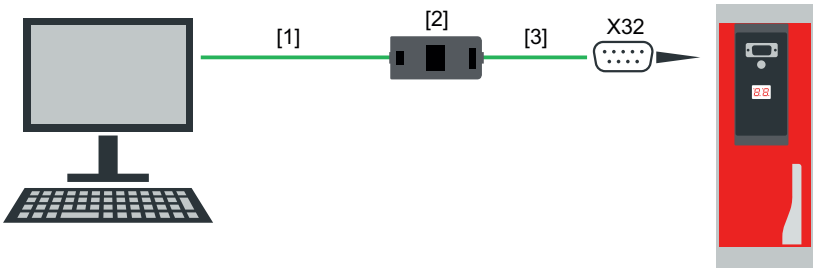

MCX91A-.../CDM11A
59119356171

[1] USB 2.0 connection cable USB type A/USB type B

[2] USM21A interface adapter

[3] RJ10/D-Sub9 connection cable

10.18.3 Connection via USB to the CBG22A, CBG21A, or CBG11A keypad

If a CBG22A, CBG21A, CBG11A keypad is used, engineering can be performed via the USB interface of the keypad.

The data is transferred according to the USB 2.0 standard. It is also possible to work with a USB 3.0 interface.

You need the following components for the connection:

Component	Part number
USB A/USB 2.0 Mini B USB connection cable for connecting the CBG.. keypad to the USB interface of the computer: • with USB A connector • with USB 2.0 Mini B connector • Length: 3 m	25643517

Connection example

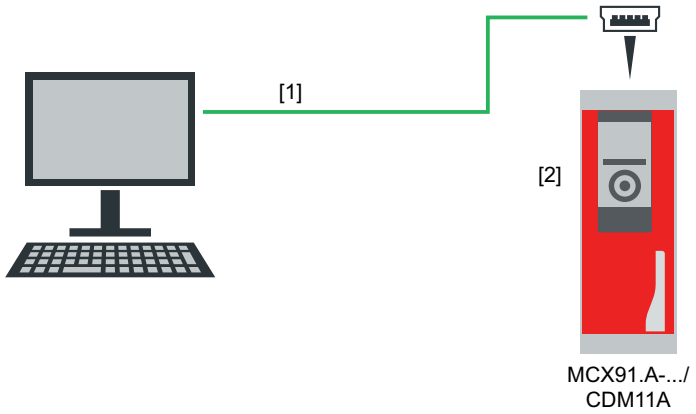

[1] USB connection cable USB A/USB 2.0 Mini B

[2] Keypad CBG22A, CBG21A, or CBG11A

10.18.4 Connection via EtherNet/IP™

Devices with the PROFINET IO, EtherNet/IP™ Modbus TCP, or POWERLINK fieldbus interface have an integrated 2-port Ethernet switch for connecting fieldbus technology. For engineering purposes, you can establish the connection between the computer and the device via Ethernet. The connection is established via interface X40/X41 of the fieldbus interface.

For the connection, you need an industrial-grade Ethernet connection cable RJ45/RJ45.

Connection example

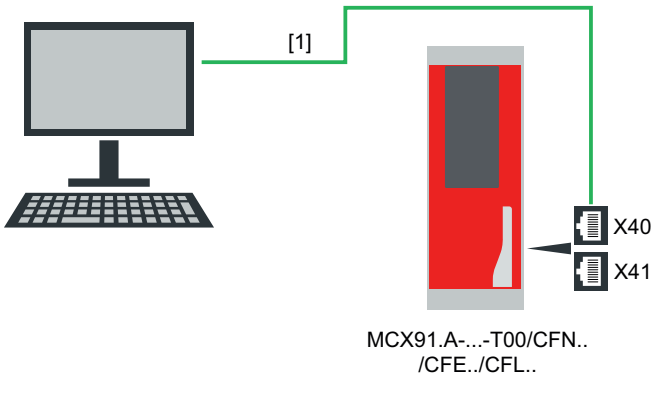

[1] Ethernet connection cable RJ45/RJ45, industry standard

33955948/EN – 05/2026

10.18.5 Connection via EtherCAT®/SBus^{PLUS}

Devices with an EtherCAT®/SBus^{PLUS} interface can be started up in the network in advance via a direct connection via EtherCAT®/SBus^{PLUS} without an EtherCAT® master.

For the connection, you need an industrial-grade Ethernet connection cable RJ45/RJ45.

Connection example

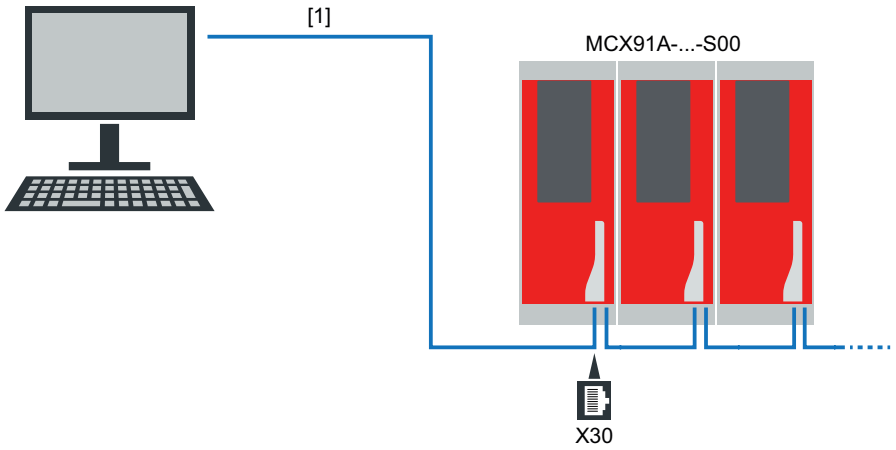

[1] Ethernet connection cable RJ45/RJ45, industry standard

11 Startup

11.1 Startup information

Perform the following steps before startup:

1. ⚠ **WARNING!** Electric shock caused by dangerous voltages. Severe or fatal injuries.
   De-energize the device. Observe the 5 safety rules in chapter "Performing electrical work safely". Then wait at least 10 minutes.
2. ⚠ **WARNING!** Risk of burns due to hot surfaces. Severe injury.
   Let the device and its accessories cool down before touching it.
3. **NOTICE!** Failing to observe the minimum switch-off time of the line contactor can cause material damage. Irreparable damage to the inverter or unforeseen malfunctions.
   After switching off the voltage supply, keep it switched off for at least 10 s.
   ⇨ Do not switch the voltage supply on or off at the line contactor more than once per minute.
4. Install the protective covers of the system according to the instructions. This will avoid injuries.
   ⇨ Never start the device if the protective covers are not installed.
5. With 3-phase devices, do not switch on the voltage supply more frequently than once every 60 seconds.
6. With 1-phase devices, do not switch on the voltage supply more frequently than once every 120 seconds.
7. ⚠ **WARNING!** Danger if the motor starts up unintentionally. Severe or fatal injuries.
   If the control signals are present, the motor can unintentionally automatically start up.
8. Note that the premagnetization of an asynchronous motor without a brake can lead to an alignment process and thus to rotor movement.

11.1.1 Lifting applications

Perform the following additional steps before starting up the lifting applications:

1. ⚠ **WARNING!** Danger from falling hoist. Severe or fatal injuries.
   Observe the following information.
   ⇨ Do not use the device alone as a safety device for the lifting application.
   ⇨ Use additional monitoring systems or mechanical protection devices as a safety device.
2. ⚠ **WARNING!** Danger from falling hoist. Severe or fatal injuries.
   Do not use the "Release brake/deactivate DynaStop® for FCB 01" function for hoists or applications with potentially falling loads. Disable the function as follows.
   ⇨ Disable the function via the parameter *Functions* > *Drive functions* > *FCB 01 Output stage inhibit* > *Release brake/deactivate DynaStop® for FCB 01 – enable* = **"0"** (No).

33955948/EN – 05/2026

3. In the MOVISUITE® engineering software, configure the parameters according to the lifting application requirements and its safety assessment.
   ⇨ Set the parameter *Functions* > *Drive functions* > *FCB 01 Output stage inhibit* > *Apply brake with STO* = "1" (Yes).
4. Check the setting of the parameter *Drive train* > *Drive train DTx* > *Controller* > *Motor behavior* > *Hoist preload* in the MOVISUITE® engineering software. Set the parameter in accordance with the lifting application requirements.
5. The *Hoist preload* parameter influences the integrator behavior of the speed controller in its initial value reentering control. The following can be selected:
   "**off**" (= default): The integrator always starts with the value "0". Any existing load torque is compensated.
   "**Save**": The integrator value that was present at the time of opening the speed control loop is retained. If the load torque has not changed, no adjustment is necessary when closing the speed control loop.
   "**Initialization value**": If the load torque is known, you can specify this to the speed controller as an initial value via the parameter "Torque preload" in the range -1000 to 1000% of the nominal motor torque. This can be done during startup or optimization of the drive with the MOVISUITE® engineering software or you can use a local setpoint or a channel of the process data buffer. If the direction of rotation is positive in the stroke direction, enter a positive value and vice versa.
6. Check the setting of the parameter *Functions* > *Monitoring functions* > *Control functions* > *Speed monitoring* > *Delay time* in the MOVISUITE® engineering software. Set the parameter in accordance with the lifting application requirements. SEW-EURODRIVE recommends setting the *Delay time* parameter to a value ≤ 100 ms.

Lifting application without encoder

V/f

SEW-EURODRIVE recommends not to use the V/f control mode in lifting applications.

VFC^{PLUS}

SEW-EURODRIVE recommends using the following settings and control behavior in lifting applications with the **VFC**^{PLUS} control mode (without encoder):

Parameter settings for asynchronous motors:

- For hoists, use the stop by setpoint function (FCB 05 - speed control). *Functions* > *Drive functions* > *FCB 05 Speed control* > *Stop by setpoint function* > *Activation* = **"1"** (Yes).
  - Set the parameter *Functions* > *Drive functions* > *FCB 05 Speed control* > *Stop by setpoint function* > *Stop setpoint* so that the resulting motor speed is ≥ 1.5 × nominal slip of the motor.
  - As an alternative, set the parameter *Functions* > *Drive functions* > *FCB 05 Speed control* > *Minimum speed* so that the resulting motor speed is ≥ 1.5 × nominal slip of the motor.
- Set the parameter *Drive train* > *Drive train ASx* > *Controller* > *Control mode* > *Flying start* = **"0"** (Off).
- Set the parameter *Drive train* > *Drive train ASx* > *Controller* > *Control mode* > *Flux optimization* = **"0"** (Off).

- Set the parameter *Drive train* > *Drive train ASx* > *Controller* > *Control mode* > *Braking operation* = **"4Q"** (motor + generator mode).
- Set the parameter *Drive train* > *Optimization ASx* > *VFCplus* > *Boost* = **10%**.

Control behavior for asynchronous motors:

- Design the control in such a way that a direction of rotation reversal is only possible in an idle state (with the brake applied).
- If you want to change the direction of rotation without an idle state, use a drive with encoder.
- Control the drive at a setpoint speed that corresponds to a speed ≥ 1.5 × nominal slip of the motor.

Parameter settings for synchronous reluctance motors:

- Set the parameter *Drive train* > *Drive train ASx* > *Controller* > *Control mode* > *Flying start* = **"0"** (Off).
- Set the parameter *Drive train* > *Drive train ASx* > *Controller* > *Control mode* > *Flux optimization* = **"1"** (Off).
- Set the parameter *Drive train* > *Drive train ASx* > *Controller* > *Control mode* > *Braking operation* = **"4Q"** (motor + generator mode).

Control behavior for synchronous reluctance motors:

- Design the control in such a way that a direction of rotation reversal is only possible in an idle state (with the brake applied).
- If you want to change the direction of rotation without an idle state, use a drive with encoder.

ELSM®

SEW-EURODRIVE recommends using the following settings and control behavior in lifting applications with the **ELSM®** control mode:

Parameter settings:

- For hoists, use the stop by setpoint function (FCB 05 - speed control). *Functions* > *Drive functions* > *FCB 05 Speed control* > *Stop by setpoint function* > *Activation* = **"1"** (Yes).
  - Set the parameter *Functions* > *Drive functions* > *FCB 05 Speed control* > *Stop by setpoint function* > *Stop setpoint* so that the resulting motor speed is > transition speed (2% of the nominal speed of the motor put into operation).
  - As an alternative, set the parameter *Functions* > *Drive functions* > *FCB 05 Speed control* > *Minimum speed* so that the resulting motor speed is > motor transition speed (2% of the nominal speed of the motor put into operation).
- Set the parameter *Drive train* > *Drive train ASx* > *Controller* > *Control mode* > *Flying start* = **"1"** (On).
- Set the parameter *Functions* > *Monitoring functions* > *Limit values* > *Application limits* > *Torque* to ≥150% of the nominal motor torque.

Control behavior:

- Design the control in such a way that a direction of rotation reversal is only possible in an idle state (with the brake applied).

33955948/EN – 05/2026

- If you want to change the direction of rotation without an idle state, use a drive with encoder.
- Control the drive at a setpoint speed that corresponds to a speed > transition speed (2% of the nominal speed of the motor put into operation).

11.2 Startup requirements

The following prerequisites are required for startup:

- You have installed the device correctly both mechanically and electrically.
- The device and connected drives have been configured correctly.
- You have taken suitable measures to ensure that the drives do not start up unintentionally.
- Safety precautions rule out hazards to personnel and machinery.

If you are using a power-adjusted motor, you can, depending on requirements, dispense with startup, see chapter "Operation without startup" (→ 🗎 394).

Otherwise you can perform startup in the following ways:

- Using a keypad
- Using the MOVISUITE® engineering software

11.2.1 Required hardware for startup with MOVISUITE®

- USM21A interface adapter, CDM11A diagnostic module and serial interface cable RJ10 → D-sub-9

  or

- CBG11A/CBG21A keypad, CDM11A diagnostic module and USB cable A → Mini B

Part number	Scope of delivery
28231449	• USM21A interface adapter • Serial interface cable with 2 RJ10 connectors • USB cable (A-B)
18123864	• Serial interface cable RJ10 → D-sub -9
25643517	• USB cable (A – mini B)
28265092	• CDM11A diagnostic module
28233646	• CBG11A keypad
28238133	• CBG21A keypad

11.3 Delivery state

The delivery state of the inverter can be restored using the CBG..A keypads or the MOVISUITE® engineering software.

The following delivery states can be selected:

- Delivery state with MOVIKIT® software module and/or parameter set ex works (reset communication parameters)

33955948/EN – 05/2026

- Delivery state with MOVIKIT® software module and/or parameter set ex works (retain communication parameters)
- Delivery state without MOVIKIT® software module and/or parameter set ex works (configuration for terminal mode)

11.4 Operation without motor startup

When delivered, the inverter is preset with a "SmartMotor" in the DT1 and DT2 drive trains. The SmartMotor is a motor data set of a power-adjusted 4-pin asynchronous motor; refer to the **product manual**, chapter "Technical data" (→ 🗎 44) "Motor power ASM P_{Mot}" (corresponds to the specification P(ASM) on the inverter's nameplate).

In the MOVISUITE® engineering software and in the CBG11A and CBG21A keypads, this presetting of the drive train is referred to as "SmartDrive".

11.5 Configuration for terminal mode

If an inverter is delivered ex works **without** a MOVIKIT® software module or parameter set, the inverter can be operated directly via digital or analog terminals, and the following terminal functions are preassigned:

Digital inputs	
DI01	FCB 05 – fixed setpoints, positive direction of rotation
DI02	FCB 05 – fixed setpoints, negative direction of rotation
DI03	Fixed speed setpoint bit 0
DI04	Fixed speed setpoint bit 1
DI05	Fault reset
DI06	No function

Configurable digital inputs/digital outputs	
DIO01	No function (set as input)
DIO02	No function (set as input)

Digital outputs	
DB00	Brake output
DOR	No function

Analog input and configurable analog input/analog output	
AI1	Function: Input, 0 – 10 V If no "Fixed speed setpoint bit.." digital input is selected, analog input AI1 is used as the speed setpoint source. The set numerator or denominator scaling in user units applies. Default: Speed setpoint in user units = AI1 value × 15/100
AIO2	No function

33955948/EN – 05/2026

11.6 Configuration for MOVIKIT® Velocity Drive

If an inverter is delivered **with** a MOVIKIT® Velocity Drive software module, the inverter can be operated directly via the fieldbus interface, and the following terminal functions are preassigned:

Digital inputs	
DI01	No function
DI02	No function
DI03	No function
DI04	No function
DI05	No function
DI06	No function

Configurable digital inputs/digital outputs	
DIO01	No function (set as input)
DIO02	No function (set as input)

Digital outputs	
DB00	Brake output
DOR	No function

Analog input and configurable analog input/analog output	
AI1	Function: Input, 0 – 10 V
AIO2	No function (set as input)

11.7 Configuration for parameters ex works

If an inverter is delivered with factory-set parameters, any inverter configuration may differ from the default settings. In this case, no assumptions can be made about the inverter's parameter settings. Before connecting any signal cables or communication systems, check the parameter settings of the inverter.

33955948/EN – 05/2026

11.8 Setting the EtherCAT® ID

It is not strictly necessary to set one of the EtherCAT® IDs. The slaves are automatically addressed by the master by default. The EtherCAT® ID must only be set on the inverter if the use of EtherCAT® IDs has been preset in the hardware configuration of the master.

An EtherCAT® ID can be permanently assigned to the device with the EtherCAT® interface using the hexadecimal switches S1 and S2. With these switches, you can set a decimal EtherCAT® ID between 1 and 255 in hexadecimal notation.

This ID serves as a unique identification tag of the respective EtherCAT® slave for the EtherCAT® master. The EtherCAT® ID is not an EtherCAT® address. The EtherCAT® ID is always assigned by the EtherCAT® master.

In the delivery state of the inverter, the ID is set to 0 by default (S1 = 0 and S2 = 0).

Required ID, decimal	ID, hexadecimal	Setting S1 (× 10)	Setting S2 (× 1)
3	03	0	3
18	12	1	2
25	19	1	9
100	64	6	4
110	6E	6	E
255	FF	F	F

S1-EtherCAT® ID (× 10)

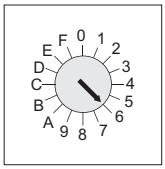

6

S2-EtherCAT® ID (× 1)

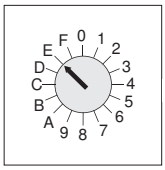

E

The EtherCAT® ID "110" is set as an example in the illustration above.

11.9 Startup with MOVISUITE® engineering software

The inverters are started up using the MOVISUITE® engineering software from SEW-EURODRIVE.



39698969867

The motor is started up in drive train 1 or drive train 2.

When using a motor from SEW-EURODRIVE, select the motor type from the catalog or enter the nameplate. You can perform the startup for motors and encoders from SEW-EURODRIVE with an electronic nameplate based on the data contained there.

When using a third-party motor, enter the corresponding nominal motor data. SEW-EURODRIVE recommends performing a motor parameter measurement using the FCB 25 for third-party motors.

The engineering software can be operated intuitively and is not described further in this document.

To obtain help or an explanation of parameters, use the F1 help function.

11.10 Startup with the CBG01A keypad

11.10.1 Information

You can start up the following motors with the CBG01A keypad:

- Asynchronous motors:
  - With or without brake
  - With or without motor sensor (TF and TH)

Further information can be found in the "CBG01A keypad" manual.

The startup of other motors can only be performed with the CBG21A keypad or with the MOVISUITE® engineering software.

33955948/EN – 05/2026

11.10.2 CBG01A keypad

The following figure shows the CBG01A keypad:

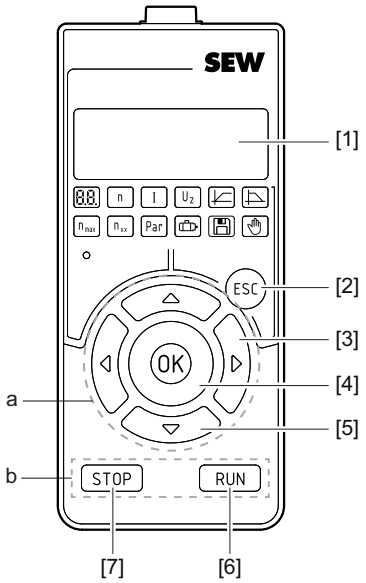

9007231988017931

[1] 5-digit, 7-segment display
[2] <Esc> key

a = Navigate in the menu
[3] <Left/right> arrow keys
[4] <OK> key
[5] <Up/down> arrow keys

b = Manual mode control section
[6] <RUN> key
[7] <STOP> key

Selecting a function

Proceed as follows:

1. To open the main menu, press the <Esc> key.
2. Select a function using the <left/right> arrow keys.
3. Confirm your selection with the <OK> key.

Entering a number

Proceed as follows:

1. Change the digit within a number by using the <left/right> arrow keys.
2. Change the value of the digit by using the <up/down> arrow keys.
3. Confirm the number with the <OK> key.

33955948/EN – 05/2026

Symbols used

The selectable functions are shown on the display of the keypad in the form of icons.

	Inverter status, FCB number, fault number
	Actual speed in min^{-1}
	Actual current in A
	DC link voltage in V
	Fixed setpoints – acceleration and application limit – acceleration in $(min \times s)^{-1}$
	Fixed setpoints – deceleration and application limit – deceleration in $(min \times s)^{-1}$
	Application limit – positive speed and application limit – negative speed in min^{-1}
	Fixed setpoints – speed in min^{-1}
	Parameter
	Startup
	Data storage
	Manual mode

11.10.3 Procedure for motor startup

A universal motor data set with the same performance has already been preloaded in the factory. If better control performance is required or the connected motor deviates from the inverter power, the startup must be carried out and the motor data entered. In the individual steps, you make the following specifications in accordance with the nameplate of the connected motor.

7-segment display	Details	Unit / selection
	Drive train	–
	Nominal motor voltage	V
	Nominal motor current	A
	Frequency	Hz
	Power	kW
	Power factor cos φ	–
	Nominal motor speed	min^{-1}

33955948/EN – 05/2026

7-segment display	Details	Unit / selection
	Control mode	• V/f[1)] • VFC[PLUS1)] • LVFC[2)]
	Brake	With brake, without brake
	Motor temperature evaluation	TF, TH, no sensor

1) MOVITRAC® advanced and MOVITRAC® classic
2) MOVITRAC® basic

33955948/EN – 05/2026


SETUP
drivetrain
OK
ESC
attention
volt
400
AMPEr
2.00
hErtz
50
PoWEr
0.00
CoSPh
rPM
1450
Mode
vFC1
brAKE
YES
TEMP-SEnSor
no
CALC
StArt
donE

11.11 Startup with the CBG11A keypad

11.11.1 Information

You can start up the following motors with the CBG11A keypad:

- Asynchronous motors:
  - With or without brake
  - With or without motor temperature sensor (TF, TH, KY and PK)

The startup of other motors can only be performed with the CBG21A keypad or with the MOVISUITE® engineering software.

11.11.2 CBG11A keypad

The following figure shows the CBG11A keypad:

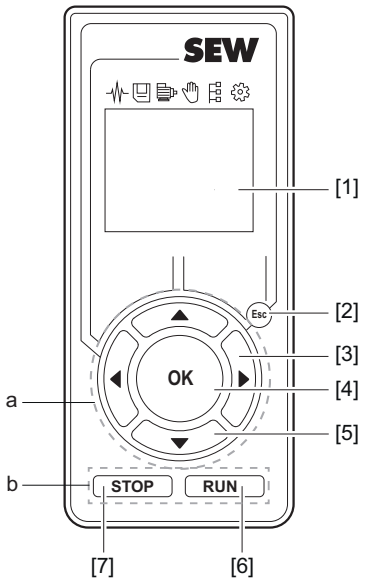

18014424428189195

[1] Color display
a = Navigate in the menu
[3] <Left/right> arrow keys
[4] <OK> key
[5] <Up/down> arrow keys
[2] <Esc> key
b = Manual mode control section
[6] <RUN> key
[7] <STOP> key

The user interface of the CBG11A keypad is in English.

Selecting a function

Proceed as follows:

1. To open the main menu, press the <Esc> key.
2. Select a function using the <left/right> arrow keys.
3. Confirm your selection with the <OK> key.

Entering a number

Proceed as follows:

1. Change the digit within a number by using the <left/right> arrow keys.
2. The editable digit is underlined.

33955948/EN – 05/2026

3. Change the value of the digit by using the <up/down> arrow keys.
4. Confirm the number with the <OK> key.

Symbols used

The selectable functions are shown on the display of the keypad in the form of icons.


Diagnostics


Data management


Startup


Manual mode


Parameter tree


Keypad settings

11.11.3 Procedure for motor startup

Proceed as follows:

1. Select the "Startup" icon.
2. Confirm with "OK".
3. Follow the startup procedure.
4. Specify the required data based on the nameplate data of the motor.

11.12 Startup with the CBG21A keypad

11.12.1 Information

You can start up the following motors with the CBG21A keypad:

- Asynchronous motors
- Synchronous motors
- Direct selection of the SEW-EURODRIVE motors

You can carry out the startup of other motors with the MOVISUITE® engineering software.

Further information can be found in the **product manual** > chapter "Startup" > "Start-up with the CBG21A keypad", including the sub-chapters.

33955948/EN – 05/2026

11.12.2 CBG21A keypad

The following figure shows the CBG21A keypad:

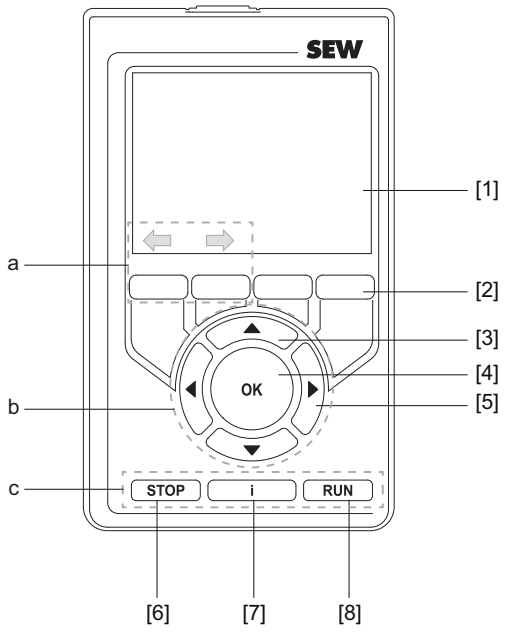

9007225148764555

[1] Color display
[2] 4 function keys that are assigned according to the context. The assigned functions are shown in the color display above the keys.

a = Permanently assigned with Back/Next

b = Navigate in the menu		**c = Manual mode control section**	
[3]	<Up/down> arrow keys	[6]	<STOP> key
[4]	<OK> key	[7]	<I> information key
[5]	<Left/right> arrow keys	[8]	<RUN> key

The user interface of the CBG21A keypad is multilingual.

Activating a field

Proceed as follows:

1. Select a field using the <up/down> arrow keys.
2. Activate the field with the <OK> key.

Entering a number

Proceed as follows:

- Change the digit within a number by using the <left/right> arrow keys.
- The editable digit is highlighted.
- Change the value of the digit by using the <up/down> arrow keys.
- Confirm the number with the <OK> key.

33955948/EN – 05/2026

Symbols used

The selectable functions are shown on the display of the keypad in the form of icons.


Startup


Manual mode


Drive train optimization


Application


Diagnostics


Parameter


Data management


Keypad settings


Start menu


MOVISAFE® CS..


Gateway


Back


Next

11.12.3 Procedure for motor startup

Proceed as follows:

1. Select the "Startup" icon.
2. Confirm with "OK".
3. Follow the startup procedure.
4. Specify the required data based on the nameplate data of the motor.

33955948/EN – 05/2026

11.13 Startup of third-party motors

11.13.1 Asynchronous motors

The nameplate data of the motor must be entered during startup:

- Nominal motor speed
- Nominal motor frequency
- Nominal motor voltage
- Nominal motor current
- Power factor cos φ
- Nominal motor power
- Optional: Mass moment of inertia[1)]

The parameters required for startup are calculated based on the nameplate data and the motor is taken into operation.

SEW-EURODRIVE recommends also performing a parameter measurement with FCB 25 to achieve improved control performance. This determines the equivalent wiring diagram data of the motor. The duration of the measurement depends on the motor parameters. In the case of asynchronous motors, the measurement is carried out in an idle state. If a brake is present, it remains closed.

1) Estimated during startup, if not specified.

11.13.2 Permanent-field synchronous motors

The nameplate data of the motor must be entered during the startup of synchronous motors:

- Nominal motor speed
- Nominal motor current
- Nominal motor voltage
- Nominal motor torque
- Nominal motor frequency or number of poles
- Maximum motor current[1)] or maximum torque at the motor shaft[1)]
- Optional:
  - Phase inductance[1)]
  - Internal voltage[1)]
  - Mass moment of inertia[2)]

In the case of permanent-field synchronous motors without an encoder, a parameter measurement must then be carried out with FCB 25.

In the case of synchronous motors with an encoder, SEW-EURODRIVE recommends carrying out the parameter measurement.

The brake is released (if present) during the measurement to align the rotor electrically. Make sure that the rotor can turn freely. For this reason, the motor must be separated from the gear unit or system.

33955948/EN – 05/2026

In the case of synchronous motors with an encoder, the encoder offset must also be set after the above-mentioned startup procedure. This commutation takes place using the "Rotor position identification" function (FCB 18). The rotor turns during the rotor position identification. Make sure that the rotor can turn freely. For this reason, the motor must be separated from the gear unit or system.

1) Estimated during startup, if not specified.
2) Is estimated at startup, if not specified.

11.13.3 Synchronous reluctance motors

The nameplate data of the motor must be entered during the startup of synchronous reluctance motors:

- Nominal motor speed
- Nominal motor frequency
- Nominal motor voltage
- Nominal motor current
- Nominal motor power
- Power factor cos φ
- Optional:
  - Maximum speed at the motor shaft[1)]
  - Maximum torque at the motor shaft[1)]

For synchronous reluctance motors, a parameter measurement with FCB 25 must then be performed. The brake is released (if present) during the measurement to align the rotor electrically. Make sure that the rotor can turn freely. For this reason, the motor must be separated from the gear unit or system.

During parameter measurement of synchronous reluctance motors, regenerative operating states may occur. For this reason, it is necessary to connect a braking resistor for parameter measurement.

For synchronous reluctance motors with an encoder, the encoder offset must additionally be set after the above-mentioned startup. This commutation is performed using the "Rotor position identification" function (FCB 18). The rotor turns during the rotor position identification. Make sure that the rotor can turn freely. For this reason, the motor must be separated from the gear unit or system.

1) Estimated during startup, if not specified.

11.14 Startup of motors with the MOVILINK® DDI interface

If an inverter has the MOVILINK® DDI interface and is connected to a motor that also has this interface, the motor is started up automatically via its electronic nameplate. The process is started by switching on the inverter. This function is only supported if the inverter is in the delivery state.

The status of the inverter shows "AC" (Auto Configuration) during the data transfer from the electronic nameplate. You can obtain more information from the SEW-EURODRIVE hotline.

33955948/EN – 05/2026

11.15 Control options

The following description requires the use of the MOVISUITE® engineering software.

Depending on the design, the inverter is controlled via the digital or analog inputs or via fieldbus.

In principle, the user is free to configure the respective interface individually or use the standard interface of SEW-EURODRIVE. Various MOVIKIT® software modules are available for this purpose.

MOVIKIT® software modules have the following advantages:

- Application-specific functionalities
- Standard interface of SEW-EURODRIVE
- Automated parameterization of the interface
- MOVIKIT®-specific diagnostics and manual operation

11.15.1 Control via MOVIKIT® software module

The MOVIKIT® software modules have fixed defined interfaces.

When using the MOVISUITE® engineering software, the MOVIKIT® software modules can be selected and added via the software catalog.

For further information on using and operating the MOVIKIT® software modules, refer to the corresponding documentation.

11.16 Application-related startup

The applications are started up with specific settings using the MOVISUITE® engineering software.

Pay attention to the information in the **Product manual** > chapter "Startup" > "Application-related startup", including the sub-chapters.

11.16.1 3-wire control

3-wire control is a control method for operation with pushbuttons. The enable is edge-controlled via the direction of rotation selection. If you activate the positive and negative direction of rotation at the same time or if you remove the enable stop signal, FCB 13 (application stop) stops. The speed setpoint source can be selected as required.

Parameterization example

In the following parameterization example, the analog input is used as setpoint source.

Description	Index	Function	Comment
Basic settings/ Setpoint source	8366.4	No source	
Setpoints/speed	8376.11	Fixed speed setpoints	
Fixed setpoints/operating mode	8354.20	Unipolar/fixed setpoint	
Fixed setpoints/analog setpoint source	8354.25	Analog input 1	Observe scaling

33955948/EN – 05/2026

Description	Index	Function	Comment
Acceleration	8377.1	Selection of the source	Default setting: Application limit
Deceleration (FCB 13)	8357.13	Entry in user units	
Stop by setpoint function (FCB 05)	8570.1		This parameter should be activated for encoderless systems
Stop setpoint	8570.2	Entry in user units	
Start offset	8570.3	Entry in user units	

Setting the digital inputs

Description	Index	Function	Comment
Digital input 1	8334.11	3-wire control – positive direction of rotation	Pushbutton, NO contact
Digital input 2	8334.12	3-wire control – enable/stop (FCB 13)	Pushbutton, NC contact
Digital input 3	8334.13	3-wire control – negative direction of rotation	Pushbutton, NO contact
Digital input 4	8334.14	Reset	Pushbutton, NO contact

33955948/EN – 05/2026

Cycle diagram

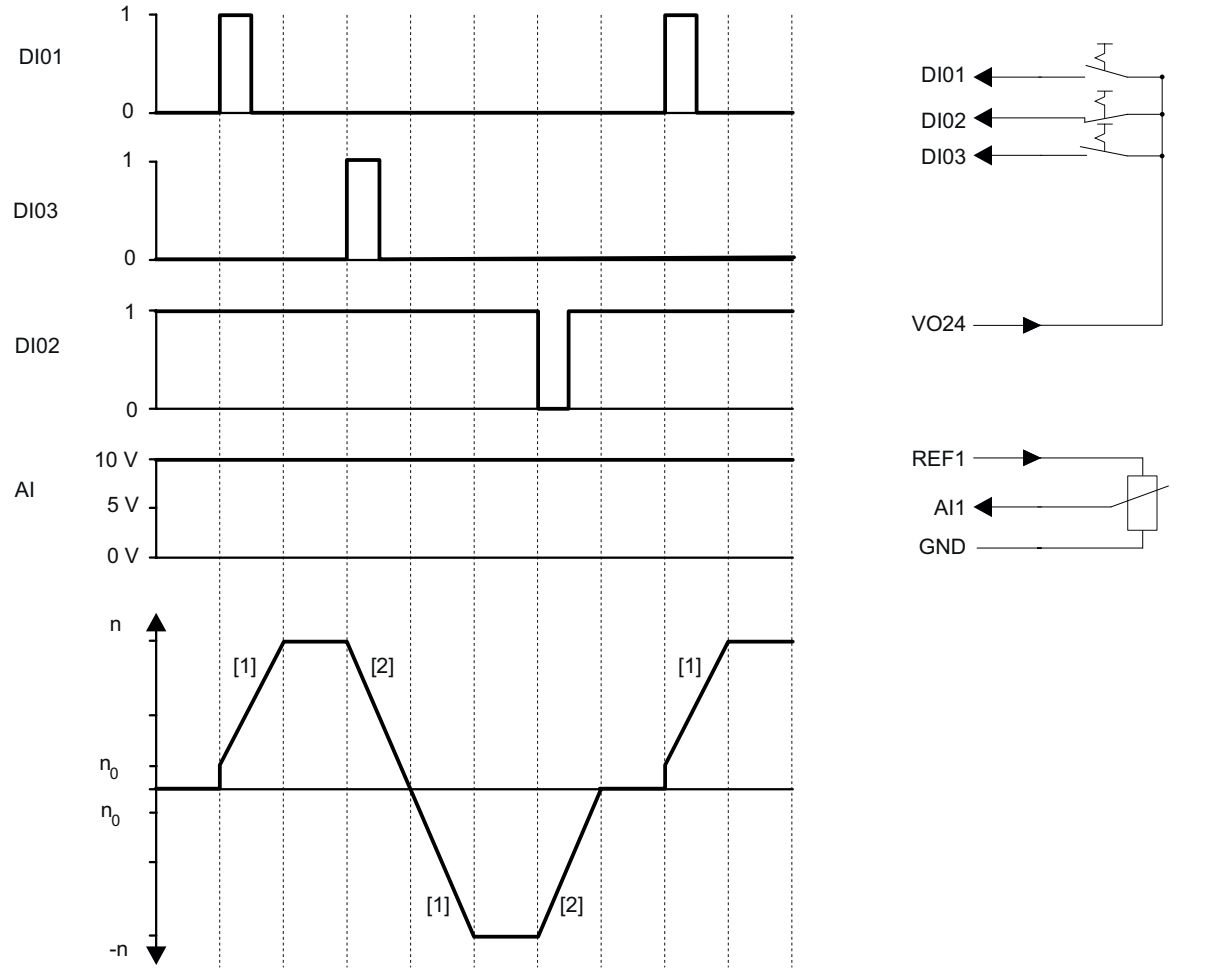

9007250051243147

[1] Acceleration according to the source
[2] Application limit deceleration (FCB 13)
DI01 3-wire control – positive direction of rotation
DI02 3-wire control – enable/stop
DI03 3-wire control – negative direction of rotation
AI Analog input setpoint
n Motor speed
n_0 Start/stop speed

11.16.2 "Motor potentiometer" function

The motor potentiometer function lets the inverter respond to signal levels.

If the digital inputs "motor potentiometer up/down" are activated, the speed changes with the profile value "max. acceleration" (index 8377.21) or "max. deceleration" (index 8377.31).

The last motor potentiometer setpoint is retained even when the supply system is switched off if the "save setpoint" function is activated via index 8369.2.

If the digital inputs "motor potentiometer up/down" are activated simultaneously, there are two options:

- Save setpoint (index 8369.2): OFF:

33955948/EN – 05/2026

  - The inverter stops along the "max. deceleration" (index 8377.31)
- Save setpoint (index 8369.2): ON:
  - The current speed is maintained.

If none of the two inputs are activated, the current speed and direction of rotation are maintained.

Parameter setting example for DT1

Description	Index	Function	Comment
Basic settings/ setpoint source	8366.4	No source	–
Setpoints/speed	8376.11	Fixed setpoints – speed	–
Fixed setpoints/operating mode	8354.20	Motor potentiometer/fixed setpoint	–
Fixed setpoints/analog setpoint source	8354.25	No source	–
Setpoints/ maximum acceleration	8377.21	Selection of the source	Default setting: Application limit
Setpoints/ maximum deceleration	8377.31	Selection of the source	Default setting: Application limit
Minimum speed	8357.18	Limitation of minimum speed	–
Save setpoint	8369.2	Off	Behavior after "power off"

Setting the digital inputs

Description	Index	Function	Comment
Digital input 1	8334.11	FCB 05 – fixed setpoints positive direction of rotation	Switch, NO contact
Digital input 2	8334.12	FCB 05 – fixed setpoints negative direction of rotation	Switch, NO contact
Digital input 3	8334.13	Motor potentiometer up	Pushbutton, NO contact
Digital input 4	8334.14	Motor potentiometer down	Pushbutton, NO contact
Digital input 5	8334.14	Reset	Pushbutton, NO contact

33955948/EN – 05/2026

Cycle diagram

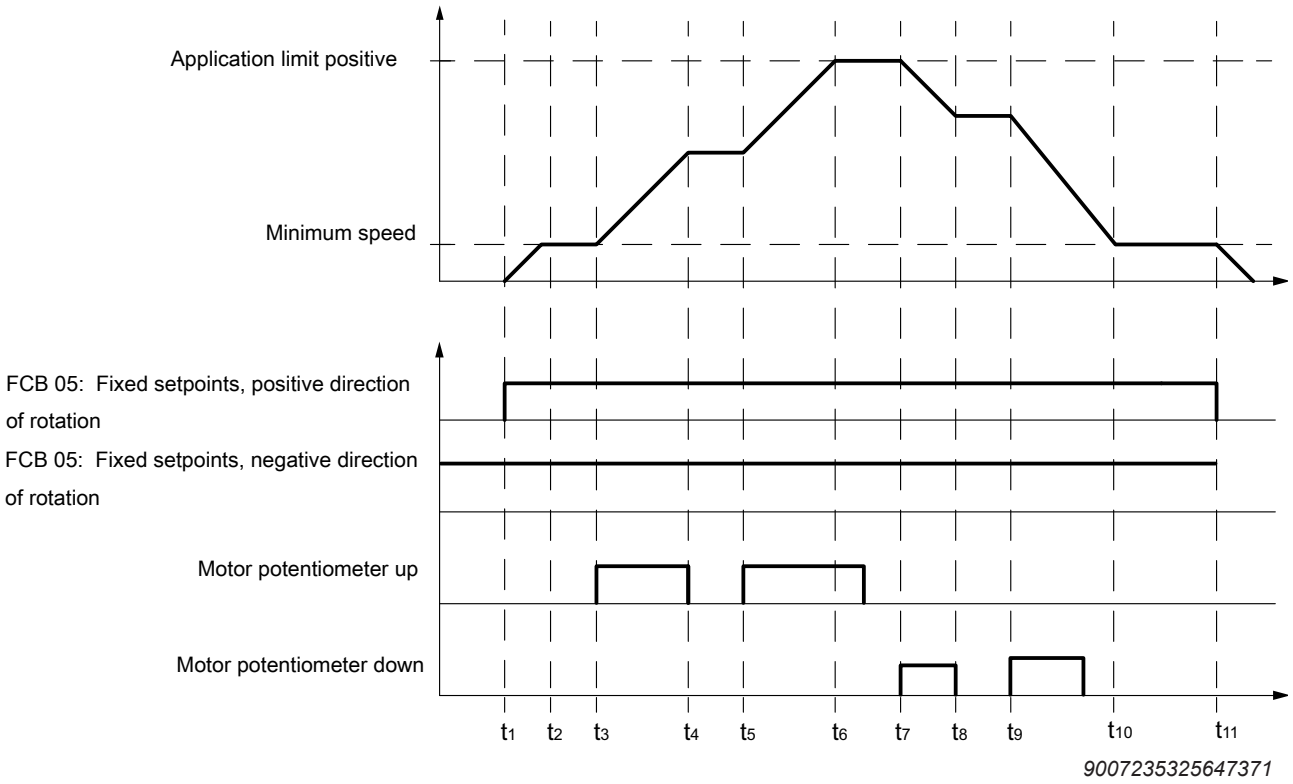

t_1	Output stage enable via "FCB 05 – fixed setpoints, positive direction of rotation"
t_1 - t_2	Motor runs up to the set minimum speed.
t_2 - t_3	Motor keeps minimum speed.
t_3	"Motor potentiometer up" is activated.
t_3 - t_4	As long as the signal "Motor potentiometer up" is present, the motor speed is increased along the acceleration ramp (index 8377.21).
t_4 - t_5	If no signal is present any longer at "Motor potentiometer up", the actual speed is maintained.
t_5	"Motor potentiometer up" is activated again.
t_5 - t_6	As long as the signal "Motor potentiometer up" is present, the motor speed is increased further along the acceleration ramp until it reaches the application limit (8357.10/11).
t_6 - t_7	The maximum speed is maintained, even if the signal at "Motor potentiometer up" is no longer present.
t_7	"Motor potentiometer down" is activated.
t_7 - t_8	As long as the signal at "Motor potentiometer down" is present, the motor speed is decreased along the deceleration ramp (index 8377.31).
t_8 - t_9	If no signal is present any longer at "Motor potentiometer down", the actual speed is maintained.
t_9 - t_{10}	As long as the signal at "Motor potentiometer down" is present, the motor speed is decreased along the deceleration ramp (index 8377.31) until it reaches the minimum speed.
t_{10} - t_{11}	The minimum speed is maintained.
t_{11}	Revoking of the output stage inhibit via "FCB 05 – fixed setpoints, positive direction of rotation"

11.16.3 Prioritized terminal control

Description

The prioritized terminal control is a control function that allows you to control a drive with priority via digital inputs. After activating the "prioritized terminal control" function, a drive can be operated independently of the parameterized control signal source (e.g., Fieldbus) via digital inputs.

3955948/EN – 05/2026

You can implement the following functions with the prioritized terminal control:

- Setpoint changeover: Automatic/manual control
- Setpoint changeover: Bus connection/terminal control
- Setpoint changeover: Basic device function/prioritized terminal control

INFORMATION

For drives with safe fieldbus communication, the STO function remains active when the prioritized terminal control is activated.

- For drives with safe fieldbus communication, SEW-EURODRIVE does not recommend using the prioritized terminal control.
- For further Information, refer to chapter "Restrictions in connection with safe communication" (→ 🗎 413).

The STO safety subfunction can be used by connecting the STO signal to the terminals specified for this purpose.

The prioritized terminal control and manual mode are mutually exclusive.

- If the prioritized terminal control is active, you cannot open the manual mode on the CBG.. keypad or in the MOVISUITE® engineering software. The message "Manual mode cannot be activated" appears in the MOVISUITE® engineering software.
- If manual mode is open in the MOVISUITE® engineering software or on the CBG.. keypad, you cannot activate the prioritized terminal control.

Restrictions in connection with safe communication

INFORMATION

The prioritized terminal control is not a safety-related function and therefore cannot take over a safety function of the safety options.

After a safety option error, you cannot start the drive without additional configuration and controls.

When activating the prioritized terminal control, stop the fieldbus. This means that the STO function is permanently active when using safe communication. Therefore, you must not use the prioritized terminal control in conjunction with the MOVISAFE® safety option.

You can use the prioritized terminal control in conjunction with the MOVISAFE® safety option under the following conditions:

- If the STO function is active, you must deactivate the STO function by activating the muting function. This is only possible if fieldbus communication is interrupted or disrupted.

  To use the muting function, you must configure it as follows using the "Assist CS" of the MOVISUITE® engineering software:

  – Configure a safe digital input using the "muting" function.
  – In the basic settings of the safety option, set the "Selection muting" parameter to "Encoder error and F-PA".

33955948/EN – 05/2026

– Set the maximum muting time according to your application's requirements.

⚠ **WARNING!** Danger due to unexpected startup. The active "Muting F-PA" function deactivates the encoder-dependent safety subfunctions (except STO). This can cause the system to start up immediately. Severe or fatal injuries.
Before activating the "Muting F-PO" function, the user must take organizational measures for the protection of personnel and the system.

- By activating the prioritized terminal control, you trigger an error reset that resets pending device errors.
  – **NOTICE!** Device faults that are caused by a hardware defect, for example, may not be reset. This causes the drive to stop in the fault state.
    Take this behavior into account during the risk assessment.
- If a **device fault** occurs during the active prioritized terminal control, you must acknowledge the fault by performing a fault reset.
  – **NOTICE!** Device faults that are caused by a hardware defect, for example, may not be reset. This causes the drive to stop in the fault state.
    Take this behavior into account in the risk assessment of the system.
- If an **error of the safety option** occurs during the active prioritized terminal control, you must safely acknowledge the error by assigning a safe digital input with the parameter "acknowledge error" and activating it.
  – **NOTICE!** You cannot reset all errors of the safety option (e.g., hardware error, critical error). This causes the drive to stop in the fault state.
    Take this behavior into account in the risk assessment of the system.

Functions

The following table describes the functions of the prioritized terminal control:

Signal at digital input	Description
Prioritized terminal control – **activation**	This signal activates the prioritized terminal control. During activation, the inverter performs a fault reset once. The drive only starts in combination with a selected direction of rotation (signal "positive direction of rotation" or "negative direction of rotation").
Prioritized terminal control – **positive direction of rotation**	• **Signal level**[1)] If you set the "positive direction of rotation" signal when the prioritized terminal control is activated, the drive starts at speed 1 in positive direction of rotation. If the "positive direction of rotation" and "negative direction of rotation" signals are set at the same time, the drive decelerates to an idle state. • **Positive signal edge (edge-controlled)** The "activation" signal must be set before the direction of rotation is selected. A positive edge of the "positive direction of rotation" signal starts the drive in positive direction of rotation at speed 1. – After a power off or STO, the drive only starts when the device is ready for operation, the "activation" signal is set and a positive signal edge of the "positive direction of rotation" signal (0 → 1) is generated. – If the "positive direction of rotation" and "negative direction of rotation" signals are set at the same time, the earlier edge defines the direction of rotation.

33955948/EN – 05/2026

Signal at digital input	Description
Prioritized terminal control – **negative direction of rotation**	• **Signal level** If you set the "negative direction of rotation" signal when the prioritized terminal control is activated, the drive starts in negative direction of rotation at speed 1. If the "positive direction of rotation" and "negative direction of rotation" signals are set at the same time, the drive decelerates to an idle state. • **Positive signal edge (edge-controlled)** The "activation" signal must be set before the direction of rotation is selected. A positive edge of the "negative direction of rotation" signal starts the drive in negative direction of rotation at speed 1. – After a power off or STO, the drive only starts when the device is ready for operation, the "activation" signal is set and a positive signal edge of the "negative direction of rotation" signal (0 → 1) is generated. – If the "positive direction of rotation" and "negative direction of rotation" signals are set at the same time, the earlier edge defines the direction of rotation.
Prioritized terminal control – **speed 2** (optional)	If the signals for "activation" and "direction of rotation .." are set, the "speed 2" signal activates speed 2 of the drive.
Fault reset (optional)	You can reset faults with the "fault reset" signal. **NOTICE!** Device faults that are caused by a hardware defect, for example, may not be reset. This causes the drive to stop in the fault state. Take this behavior into account in the risk assessment of the system.

1) Select the edge detection "signal level" or "positive signal edge" in the basic settings.

Observe the following information:

- You control the functions of the prioritized terminal control via the signals at the digital inputs.
- When the prioritized terminal control is activated, the inverter resets the present fault once (fault reset).
- Further digital inputs (e.g. from limit switches or external faults) are still evaluated.
- If several digital inputs are assigned the same function (e.g. "Positive direction of rotation"), the signals are linked with OR.
- Unused functions are assigned level 0 and are therefore not active.

Check whether the inverter has enough free digital inputs for the functions of the prioritized terminal control.

At least 2 digital inputs are required for the prioritized terminal control:

- "Prioritized terminal control – activation" (= "Activation")

  and the

- "Prioritized terminal control – positive direction of rotation" (= "Positive direction of rotation")

  or

- "Prioritized terminal control – negative direction of rotation" (= "Negative direction of rotation")

You can optionally use an additional digital input for the fault reset and/or speed 2.

Parameters, setpoints

The following parameters and setpoints for the prioritized terminal control can be found in the MOVISUITE® engineering software > "Functions" > "Setpoints" > "Prioritized terminal control".

Basic settings

- "Edge detection after STO (if present) and power ON"

  The control signals at the digital inputs must always be present.

  Selection:

  – "Signal level"

    The function starts whenever the input signals are set or are already present.

  – "Positive signal edge (edge-controlled)"

    The function only starts if

    - after resetting STO (if present) or

    - after switching on the line voltage (power on) or

    - after switching from 24 V backup mode to line operation (power on)

    a positive edge of the "positive direction of rotation" or "negative direction of rotation" signal (0 → 1) occurs.

Status

- "Prioritized terminal control – activation"
- "Prioritized terminal control – positive direction of rotation"
- "Prioritized terminal control – negative direction of rotation"
- "Prioritized terminal control – speed 2"

Speed

- "Speed 1 DT1"
- "Speed 2 DT1"
- "Speed 1 DT2"
- "Speed 2 DT2"
- "Speed source"

Acceleration/deceleration

- "Acceleration/deceleration DT1"
- "Acceleration/deceleration DT2"

Operating principle

For prioritized terminal control, the controller uses FCB 04 function block (= manual mode). This function block can only be overwritten by a higher-level FCB (e.g., FCB 01, FCB 14, FCB 13, ..).

Activation

If you set the "Activation" signal, the prioritized terminal control is activated.

- The previous setpoint inputs (e.g. from MOVIKIT®, fieldbus control, basic device functions, …) are deactivated.
- The inverter resets present faults once (e.g. fieldbus fault, etc.).
- The drive is not enabled.

33955948/EN – 05/2026

- The output stage is inhibited.
- Display: **FCB 01**

Starting the drive

If you set the "positive direction of rotation" or "negative direction of rotation" signal, the drive is started.

- The drive is enabled in the selected direction of rotation.
- The drive accelerates up to speed 1 of the selected drive train (DT). The "Acceleration DT1" or "Acceleration DT2" parameter specifies the acceleration.
- Display: **FCB 04**

Speed 2

If you set the "Speed 2" signal, speed 2 is activated.

- The drive accelerates up to speed 2 of the selected drive train (DT). The "Acceleration DT1" or "Acceleration DT2" parameter specifies the acceleration.
- Display: **FCB 04**

Status display

The status of the prioritized terminal control (e.g., message "Prioritized terminal control active" or group message "Manual mode/prioritized terminal control active") can be output as follows:

- Via a binary output
- Via a relay
- Via a status word bit
- Via a message bit
- Via the visual 7-segment display
- Via the "DRIVE" LED

  For devices without a 7-segment display, the "DRIVE" LED flashes green with a frequency of 1 Hz (= manual mode/prioritized terminal control).

Stopping the drive

If **none of the signals** "Positive direction of rotation" and "Negative direction of rotation" is set, the drive is stopped.

- The drive decelerates until standstill.
- The output stage of the inverter is inhibited.
- Display: **FCB 01**

INFORMATION

If **none of the signals** "Positive direction of rotation" and "Negative direction of rotation" is set, the drive is stopped and remains energized.

- The drive decelerates until standstill.
- The drive remains energized.
- The output stage of the inverter is not inhibited.
- Display: **FCB 04**

33955948/EN – 05/2026

Deactivation



⚠ WARNING

Danger due to unexpected startup. If you deactivate the prioritized terminal control, the drive is immediately controlled by the original control source. Depending on the settings of the original control source, the drive may restart unexpectedly.

Severe or fatal injuries.

- Check the parameters and signals of the original control source before deactivating.
- Make sure that the settings of the parameters and signals of the original control source do not pose any risks.

If you reset the "Activation" signal, the prioritized terminal control is deactivated.

- The inverter no longer responds to the signals at the digital inputs of the prioritized terminal control.
- The inverter only responds to the parameters and signals of the original control source (e.g. fieldbus signals, other inverter functions, etc.).

11.16.4 Positioning and speed control with HTL encoders

Proceed as follows:

- Start up the drive train with HTL encoders.
- Optimize the drive train:
  - Determine load moment of inertia
  - Stiffness of the control
  - Zero backlash
- Insert the MOVIKIT® "Positioning Drive" software module.
- Assign the inputs as follows:
  - DI04: HTL signal - track A
  - DI05: HTL signal - track B
  - DI06: HTL signal - track C (optional)

Restrictions for the EI7C encoder:

Only simple positioning tasks can be implemented in combination with the MOVIKIT® Positioning Drive software module and the EI7C encoder. The achievable accuracy is 1/4 motor revolutions.

Due to the low encoder resolution, observe the following:

- Speed control is not possible.
- Position control is not possible at speed 0. Ensure that at speed 0, or when the "in position" signal is set, the inverter is inhibited and the brake (if present) is applied. Check whether the "Apply brake when target position reached" function is activated under the drive function FCB 09 positioning control. This setting blocks the output stage when the target position is reached and allows the brake to be applied (if present).
- SEW-EURODRIVE recommends setting the lag range accordingly large and setting the control to soft.

33955948/EN – 05/2026

INFORMATION

If there is a speed monitoring error or lag error, check the encoder tracks and, if necessary, perform the referencing procedure again. A loss of the encoder track signals is not detected. As a result, the reference signal remains active.

11.16.5 Scaling of analog inputs and analog outputs

With the MOVISUITE® engineering software, the analog inputs and analog outputs can be scaled based on your entries.

11.16.6 Fan applications or direct drives with high external inertia

Proceed as follows:

- Start up the drive train.
  - Use the operating mode that is appropriate for the motor (VFC^{PLUS} or ELSM®).
  - Activate the "Flying start" function so that a rotating motor is detected when enabled.
  - If no braking resistor is used and DC-link overvoltage is to be avoided, the braking mode can be switched to 2Q braking operation.
  - If a third-party motor is used, activate FCB 25 parameter measurement after motor startup. Make sure that the motor does not rotate in an uncontrolled manner during the measurement. If a fan is present, it may be necessary to bring the fan to a standstill and mechanically lock it before carrying out the parameter measurement. Use suitable means.
- Optimize the drive train.
  - Set the external inertia. You can select "10 × J_Motor" as the initial value for a direct drive.
  - Initially, the default values can be retained for stiffness and backlash.
- Limit the limit values.
  - Set the application limit to the value appropriate for the application. An overload is usually not required for fans; therefore, a value of ≤ 150% is recommended.
- Deactivate monitoring functions.
  - When 2Q braking operation is used, the deceleration setpoint is not maintained at high regenerative energy. Therefore, it is advisable to disable speed monitoring completely ("Off") or set it to "Motor mode" only.

11.17 Startup of the MOVISAFE® CS..A safety option

11.17.1 Important information



⚠ WARNING

Unexpected and unwanted movement of the drive during parameterization of the safety option.

Severe or fatal injuries.

- Before parameterization, make sure the system is in idle state.

33955948/EN – 05/2026

INFORMATION

No safety subfunction is enabled in the delivery state of the safety option. The LEDs of the safety options signal that the safety option is accepted. The safety option permanently deactivates the STO safety subfunction.

11.17.2 General information about startup

- If a brake is connected to the device, the *FCB 01 Output stage inhibit* function block must be selected in the MOVISUITE® parameter tree under [Functions] > [Drive functions]. In *FCB 01 Output stage inhibit*, the *Apply brake in event of STO* parameter must be set to "On".
- The following chapters describe the additional startup procedure for the MOVISAFE® CS..A safety option and the safety subfunctions.
- Note the prerequisites for installation and operation of MOVISUITE®.
- The CIP Safety™ safety protocol and the EDM safety subfunction are supported by the safety option as of firmware version 4.01, the basic unit firmware as of version 9.0 and MOVISUITE® as of version 2.30.
- The CSS..A safety option is supported as of firmware version 5.1x, the basic unit firmware as of version 11.0 and MOVISUITE® as of version 2.50.
- The EK8Z and AK8Z safety encoders with MOVILINK® DDI are supported by the safety option as of firmware version 5.1, by the basic device firmware as of version 11.0, and by MOVISUITE® as of version 2.50.
- The EK0Z, AK0Z, and EK9Z safety encoders with MOVILINK® DDI are supported by the safety option as of firmware version 6.0x, by the basic device firmware as of version 12.0, and by MOVISUITE® as of version 2.60.
- The SS1-r, SS2-r, SS2-t, SOS, SDI, SLS, SSM, SSR, SLA and SLI safety subfunctions require a safe encoder.
- Make sure that the MOVISAFE® F-Protocol Editor and the Assist CS.. parameterization tool are not used simultaneously in the system. The parameterization tool used must be open only once.
- When starting up several similar devices with identical parameterization, the devices can be parameterized using the "Import/Export" function. Note that you must accept every single device to accomplish this.
- If the SBC safety subfunction is active, the brake is controlled via the selected F-DO00. The safe digital output F-DO00 additionally performs the function of the DB00 brake control. The DB00 connection on the basic device does not have to be used additionally. The SBM safe brake module (in size 3 or larger of MOVITRAC®advanced) can be used as a safe actuator for controlling the brake.
- All adjustable parameter values are limited to their minimum and maximum values. Hover the mouse over the respective parameter to view the limit values in MOVISUITE®.

11.17.3 Startup options

Prerequisites

For a successful startup, you need the "Assist CS.." parameterization tool. You can call up the "Assist CS.." parameterization tool directly in MOVISUITE® (download from www.sew-eurodrive.com).

3395948/EN – 05/2026

Parameterization procedure

This chapter describes the parameterization of the safety subfunctions step-by-step.

1. **Start** MOVISUITE®.
2. **Scan the network.**

   Scan the network that contains your engineering interface to the device (USB, Ethernet, etc.).
3. **Start the "Assist CS..A" parameterization tool.**

   Start the "Assist CS.." parameterization tool from the MOVISUITE® interface.

   A window opens with a prompt to enter the safety key ID and the password.
4. **Enter the safety key ID number of the device and establish a connection.**

   Enter the safety key ID of the safety option to be parameterized and the corresponding password, and confirm the entry with [OK].

   The safety key ID is printed on the safety key.

   The querying of the safety key ID ensures that the "Assist CS.." parameterization tool connects to the correct device.

   As an alternative, you can read the safety key ID via the "Assist CS.." parameterization tool. Proceed as follows:

   - Click the [Read safety key ID] button.
   - Check if the addressed device signals a "read safety key ID" operation via the "F-RUN" LED (see chapter "'F-RUN' LED" (→ 2 535)). This process should take a maximum of one minute. After one minute, the device LED does not flash anymore and confirmation of the flash code is no longer accepted. In this case, restart the flash code query.
   - The read safety key ID is applied in the "Safety key ID" field.
5. **Upload the current parameterization of the device.**

   Once the safety key ID has been entered, the current parameterization of the CS..A safety option is compared to the current parameterization in the "Assist CS.." parameterization tool. If both data sets are identical, the "Assist CS.." parameterization tool starts. In case of deviation, a dialog opens in which the user can choose whether the data set of the safety option or the data set of the "Assist CS.." is used.
6. **Parameterization**

   Set the parameterization according to the safety-related requirements of your application.

   To parameterize the MOVISAFE® CS..A safety option, the individual areas in the parameter tree are called up and the required input values are entered. The higher-level parameters, such as IO error effects, fieldbus connection, encoder activation, and limit speeds of the motor are set in the "General parameters" area.

   The parameters of the sensors and actuators are set in the "F-DI" and "F-DO" areas. The parameters of the safety subfunctions are then set and assigned to the parameterized inputs/outputs in the "Function assignment" area.

   The "Assist CS.." parameterization tool creates a parameter set from all of the parameters.

33955948/EN – 05/2026

7. **Transfer the parameter set to the device.**

   Clicking the [Download] button transfers the parameter set to the MOVISAFE® CS..A safety option.

   After the download, the transferred parameter set is checked for consistency and plausibility. Any inconsistencies or plausibility errors are displayed and can then be corrected.

   When the parameter set has been transferred to the MOVISAFE® CS..A safety option without any errors, you can start up the standard functions and, if required, connect it to the higher-level safety controller (F-PLC).

When the parameter set has been transferred to the MOVISAFE® CS..A safety option without any errors, you can start up the standard functions and, if required, connect it to the higher-level safety controller (F-PLC).

Variant 1: Startup with default parameterization

After a safety protocol (e.g. PROFIsafe) has been activated, the MOVISAFE® CS..A safety option can be started up with the default parameterization of the safety subfunctions.

Take the following marginal conditions into consideration with this operating mode:

- The safety protocol on the MOVISAFE® CS..A safety option is activated via the "Assist CS.." parameterization tool.

For startup, perform the following steps:

1. Activation of the safety protocol on the MOVISAFE® CS..A safety option in the "Assist CS.." parameterization tool.
2. Startup of the safe fieldbus and the higher-level F-PLC.

   Make sure that the default parameterization of the MOVISAFE® CS..A safety option is active. To do so, check the following parameters (see following figure).

   - The parameter setting status of the safety option is "Validated".

33955948/EN – 05/2026

- The preset iPar_CRC for the default parameterization in the GSDML file corresponds to the checksums of the current and accepted configuration.

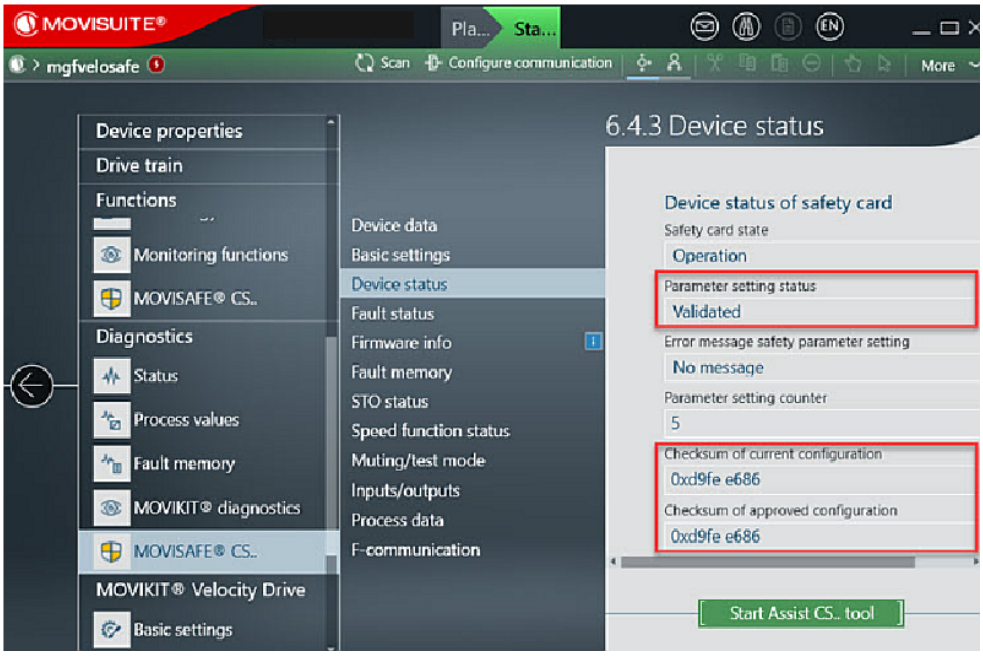

28643836683

3. The acceptance of the STO function can be performed as part of the acceptance of the complete system or the acceptance of the F-PLC.

Variant 2: With connection to safe communication (safety protocol)

The MOVISAFE® CS..A safety option can be parameterized and operated (fieldbus connection) with connection to safe communication (e.g. PROFIsafe safety protocol).

Take the following boundary conditions into consideration with this operating mode:

- The parameters of the MOVISAFE® CS..A safety option are set using the "Assist CS.." parameterization tool.
- The validation of the system is supported by an acceptance report generated in the "Assist CS.." parameterization tool.

For startup, perform the following steps:

1. Parameterize the safety subfunctions in the "Assist CS.." parameterization tool.
2. Startup of the fieldbus and the higher-level safety controller.
3. Startup of the standard functions.

   For further information, refer to the chapter "Startup".
4. The acceptance is supported by the "Assist CS.." parameterization tool. When the acceptance report is created, the *ParCRCBus* parameter is updated and must be adjusted in the safety controller.
5. You must assign a password before generating the acceptance protocol.

Variant 3: Independent operation (without connection to safe communication)

The MOVISAFE® CS..A safety option can be parameterized and operated without a connection to safe communication (independent operation).

Take the following boundary conditions into consideration with this operating mode:

- The parameters of the MOVISAFE® CS..A safety option are set using the "Assist CS.." parameterization tool.
- The validation of the system is supported by an acceptance report generated in the "Assist CS.." parameterization tool.

For startup, perform the following steps:

1. Parameterize the safety subfunctions in the "Assist CS.." parameterization tool.
2. Startup of the standard functions.

   For further information, refer to the chapter "Startup".
3. The acceptance is supported by the "Assist CS.." parameterization tool.
4. You must assign a password before generating the acceptance protocol.

11.17.4 Adjusting the maximum test duration for load with unknown capacitance

In order to determine the "Maximum test duration" parameter (Index 8705.2) for a load with unknown capacitance at a safe digital output (F-DO..), proceed as follows:

1. Select the safe digital output F-DO00. Connect the load according to the selected connection type and set the "Connection type".
2. Set the "Maximum test duration" parameter (Index 8705.2) to the maximum value of 5000 µs.
3. Interconnect the selected output for at least 10 seconds.
4. Form the maximum value from the following values for the selected output:
   - Value of display parameter "Maximum duration test pulse A" (Index 8703.37)
   - Value of display parameter "Maximum duration test pulse B" (Index 8703.8)
5. Block the selected output for at least 10 seconds.
6. Form the maximum value from the following values for the selected output:
   - Formed maximum value from step 4
   - Value of display parameter "Maximum duration test pulse A" (Index 8703.37)
   - Value of display parameter "Maximum duration test pulse B" (Index 8702.8)
7. In order to specify the "Maximum test duration" value (Index 8705.2), add a reserve of 500 µs to the maximum value determined in step 6.

11.17.5 Starting up encoder systems

Encoder evaluation of the CSL safety option

The CSL safety option supports the EI7C FS safe encoder. The following conditions are met with the use of the EI7C FS:

- The encoder fulfills the prescribed safety requirements according to EN ISO 13849-1 and EN 62061.
- The encoder is approved for the use of speed/position-dependent safety subfunctions.

The EI7C FS safe encoder is connected to the standard inverter at X18.

The encoder that is used is selected in the Assist CS.. tool in the "Encoder" dialog via the "Encoder type" drop-down list. All of the required encoder configurations are taken over. If the selection of the encoder in the drive train differs from the set motor encoder, the parameter is marked with an "i".

33955948/EN – 05/2026

Encoder evaluation of the CSS safety option

The CSS safety option supports the EI7C FS safe encoder and safety encoders with MOVILINK® DDI. This means that the following conditions are met:

- The encoder fulfills the prescribed safety requirements according to EN ISO 13849-1 and EN 62061.
- The encoder is approved for the use of speed/position-dependent safety subfunctions.

The safety encoder is connected as follows:

- The EI7C FS safe encoder is connected to the basic device at X18.
- The safety encoder with MOVILINK® DDI is connected to the basic device at X16.

The encoder that is used is selected in the Assist CS.. tool in the "Encoder" dialog via the "Encoder type" drop-down list. All of the required encoder configurations are taken over. If the selection of the encoder in the drive train differs from the set motor encoder in the drive train, the parameter is marked with an "i".

Startup of safety encoders with MOVILINK® DDI

Select the safety encoder with MOVILINK® DDI (EK8Z or AK8Z) in the Assist CS.. parameterization tool. After the configuration is transferred to the CS..A safety option, the encoder and the safety option automatically connect. This process is called pairing.

If the pairing process does not work, you have the option of starting the process manually via the Assist CS.. parameterization tool.

1. Select the menu item "MOVILINK® DDI encoder".
2. Then select the menu item "Perform pairing".



48371223051

3. After successful pairing, you can conclude your startup phase.

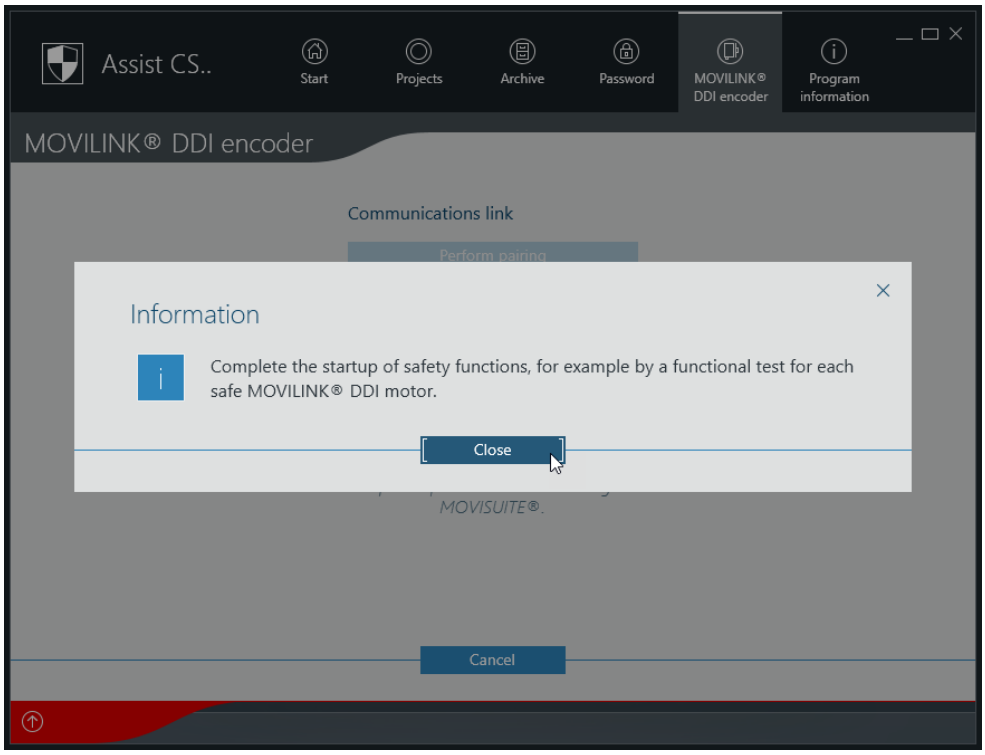

48371223947

11.17.6 Parameterizing the safety subfunctions

INFORMATION

F-communication must be activated or the safety subfunction must be parameterized on an F-DI so that the safety subfunction is activated with logical "0" at the safe digital input or via the safe process data.

Requirements

With the CSL..A and CSS..A safety options, the required process values are created by selecting the encoder.

Proceed in the following order:

1. Configure the drive train in the inverter with all the encoders involved and the user units.
2. Open the "Assist CS.." parameterization tool and log in. The user units configured in the drive train are added to the "Assist CS.." parameterization tool.
3. Apply the encoder parameters to the safe configuration.
4. Configure the required safety subfunctions.

   All the limit speeds of the safety subfunctions must lie between the minimum speed and the maximum speed.
5. The safety subfunctions can be activated via parameterization, safe digital inputs F-DI, or safe process data. Activation via safe digital inputs F-DI and safe process data is performed with logic "0".

3955948/EN – 05/2026

STO safety subfunction with MOVISAFE® CS..A

Functional description

If the STO function is activated due to a limit value violation of a safety subfunction, the internal safe digital output F-DO_STO and all safe digital outputs F-DO assigned to the STO/SBC function are disabled immediately.

If the STO function is activated due to a limit value violation of a safety subfunction, the internal safe digital output F-DO_STO is disabled immediately.

When the STO safety subfunction is activated, the internal safe digital output F-DO_STO and the safe digital outputs F-DO assigned to the STO function are disabled immediately. In the basic device, the function block *FCB 01 Output stage inhibit* is activated and the status STO is set.

If the STO function is deactivated, the internal safe digital output F-DO_STO and all safe digital outputs F-DO assigned to the STO/SBC function are activated immediately.

If a limit value violation of a safety subfunction, a system error, or an output error occurs during the brake application delay, the brake application time is immediately stopped and the internal safe digital output F-DO_STO and all safe digital outputs F-DO assigned to the STO function are disabled. The safe digital outputs F-DO assigned to the SBC function are already disabled.

If the parameter *SBC enable* is set to "yes", all safe digital outputs F-DO assigned to the SBC function will be disabled immediately when the STO function is activated. Once the time defined in the parameter *Brake application time* has elapsed, the internal safe digital output F-DO_STO and all safe digital outputs F-DO assigned to the STO function are disabled with a delay.

Activation

Number of instances: 1

The STO safety subfunction can be activated via the following sources:

- F-DI (function assignment)
- Safe process output data (STO 1)
- SSx 1/2 final state
- Fault response
- Limit value violation

Status

The status of the STO safety subfunction is displayed in the following areas:

- Diagnostics > MOVISAFE® CS..A, STO status
- Safe process input data (STO 1)

SS1-t safety subfunction with MOVISAFE® CS..A

Functional description

The SS1-t safety subfunction monitors the parameterized time delay and triggers the STO safety subfunction once the time delay has elapsed. To implement the SS1-t safety subfunction, the ramp monitoring must be set to "none" and the final state to "STO" in the SSx instance.

33955948/EN – 05/2026

If the *Inverter control* parameter is set to "Active", activating the SS1-t safety subfunction results in the activation of the *FCB 13 Application stop* drive function in the inverter.

If the *Inverter control* parameter is set to "Not active", the inverter is not controlled.

Activation

Number of instances: 2 (SSx1, SSx2)

The safety subfunction can be activated via the following sources:

- F-DI (function assignment)
- Safe process output data (SSx1, SSx2)
- Fault response
- Limit value violation

Status

The status of the safety subfunction is displayed in the following areas:

- Diagnostics > MOVISAFE® CS..A, speed function status
- Safe process input data (SSx1, SSx2)

Fault response on limit value violation

No fault response on limit value violation.

SS1-r safety subfunction with MOVISAFE® CS..A

Functional description

The SS1-r safety subfunction monitors the amount of motor deceleration within specified limits. The STO safety subfunction is activated if the motor speed drops below a specified limit value. If the limit speed is exceeded, the STO safety subfunction is activated without a brake application delay.

If the SS1-r safety subfunction is activated, first the parameterized *Monitoring delay* (8706.9) applies. During the monitoring delay, the parameterized *Maximum speed* (8707.1) is monitored. Then the monitoring of the parameterized speed ramp starts.

If the *Ramp monitoring* parameter is set to "linear", monitoring of the linear speed ramp starts at the currently detected actual speed when the SS1-r safety subfunction is activated. The end speed of the speed ramp is the parameterized minimum speed.

If the *Ramp monitoring* parameter is set to "jerk-limited", monitoring of the jerk-limited speed ramp starts at the sum of the currently detected actual speed plus the parameterized offset speed after the SS1-r safety subfunction is activated. The end speed of the speed ramp is either the parameterized minimum speed or, if larger, the parameterized offset speed.

If the limit speed of the speed ramp reaches the end speed, the parameterized final state (STO, SOS, or SLI safety subfunction) is activated.

If the *Inverter control* parameter is set to "active", activating the safety subfunction results in the activation of the *FCB 13 Application stop* drive function in the inverter.

If the *Inverter control* parameter is set to "Not active", the inverter is not controlled.

33955948/EN – 05/2026

If the *Inverter control* parameter is set to "Active with limiting", the stop ramp of the inverter is limited to the following values:

- Minimum value of the SSx deceleration
- Maximum value of the parameterized jerk time

Activation

Number of instances: 2 (SSx1, SSx2)

The safety subfunction can be activated by the following sources:

- F-DI (function assignment)
- Safe process output data (SSx1, SSx2)

Status

The status of the safety subfunction is displayed in the following areas:

- Diagnostics > MOVISAFE® CS..A, speed function status
- Safe process input data (SSx1, SSx2)

Fault response on limit value violation

Due to the limit value violation, the STO safety subfunction is activated without brake application delay.

The limit value violation must be acknowledged. By deactivating the SSx function, the limit value violation is not acknowledged. The SSx function cannot be reactivated with an existing limit value violation. It can only be acknowledged if the SSx function is deactivated. After acknowledgment, the final state of the SSx function is active immediately.

Fault response on encoder fault

If an encoder fault occurs, the STO safety subfunction is activated immediately without brake application delay. The status of the SSx function becomes inactive. The encoder fault must be acknowledged. The encoder fault cannot be acknowledged by deactivating the SSx function.

INFORMATION

If an SSx instance is assigned to another safety subfunction as a fault response, the SLI function cannot be parameterized as the final state.

INFORMATION

An SLI instance must be enabled for the SLI final state.

SS2-t safety subfunction with MOVISAFE® CS..A

Functional description

The SS2-t safety subfunction monitors the parameterized time delay and triggers the SOS safety subfunction once the time delay has elapsed. To do this, the SOS safety subfunction must be enabled.

If the *Inverter control* parameter is set to "Active", activating the SS2-t safety subfunction results in the activation of the *FCB 19 Position hold control* drive function in the inverter.

33955948/EN – 05/2026

If the *Inverter control* parameter is set to "Not active", no changeover of the *FCB 19 Position hold control* drive function is carried out in the inverter. Stopping of the drive must be ensured by the user. The idle state behavior (changeover to the *FCB 19 Position hold control* drive function) is dependent on the parameterization of the SOS safety subfunction.

INFORMATION

Note the priorities of the drive functions (FCB).

If the *Inverter control* parameter is set to "Active" or "Active with limiting", the drive function (FCB) that is active at this time must have a lower priority than the *FCB 19 Position hold control* drive function when the SS2-t safety subfunction is activated.

If this is not the case, the *FCB 19 Position hold control* drive function will not be activated, the stop ramp will not be initiated, and as a result the SOS safety subfunction will respond with a limit value violation after the deceleration.

The following drive functions (FCB) have a higher priority than the *FCB19 Position hold control* drive function:

- FCB 12 Reference travel
- FCB 04 Manual mode
- FCB 20 Jog mode

Limitation

INFORMATION

The SS2-t safety subfunction must not be used in conjunction with the EI7C FS built-in encoder.

Activation

Number of instances: 2 (SSx1, SSx2)

The safety subfunction can be activated by the following sources:

- F-DI (function assignment)
- Safe process output data (SSx1, SSx2)

Status

The status of the safety subfunction is displayed in the following areas:

- Diagnostics > MOVISAFE® CS..A, speed function status
- Safe process input data (SSx1, SSx2)

Fault response on limit value violation

No error response on limit value violation.

Fault response on encoder fault

If an encoder fault occurs, the STO safety subfunction is activated immediately without brake application delay. The status of the SSx function becomes inactive. The encoder fault must be acknowledged. The encoder fault cannot be acknowledged by deactivating the SSx function.

3955948/EN – 05/2026

INFORMATION

If an SSx instance is assigned to another safety subfunction as a fault response, the SLI function cannot be parameterized as the final state.

INFORMATION

An SLI instance must be enabled for the SLI final state.

SS2-r safety subfunction with MOVISAFE® CS..A

Functional description

The SS2-r safety subfunction monitors the amount of motor deceleration within specified limits.

If the motor speed falls below a defined limit value, the SS2-r safety subfunction triggers the SOS function. To do this, the SOS safety subfunction must be enabled. The STO safety subfunction is triggered if the motor speed exceeds a specified limit value.

If the SS2-r safety subfunction is activated, first the parameterized *Monitoring delay* (8706.9) applies. During the monitoring delay, the parameterized *Maximum speed* (8707.1) is monitored. Then the monitoring of the parameterized speed ramp starts.

If the *Ramp monitoring* parameter is set to "linear", monitoring of the linear speed ramp starts at the currently detected actual speed when the SS2-r safety subfunction is activated. The end speed of the speed ramp is the parameterized minimum speed.

If the *Ramp monitoring* parameter is set to "jerk-limited", monitoring of the jerk-limited speed ramp starts at the sum of the currently detected actual speed plus the parameterized offset speed after the SS2-r safety subfunction is activated. The end speed of the speed ramp is either the parameterized minimum speed or, if larger, the parameterized offset speed.

If the limit speed of the speed ramp reaches the end speed, the parameterized final state (STO, SOS, or SLI safety subfunction) is activated.

If the *Inverter control* parameter is set to "Active", activating the safety subfunction results in the activation of the *FCB19 Position hold control* drive function in the inverter.

If the *Inverter control* parameter is set to "Not active", no changeover of the *FCB19 Position hold control* drive function is carried out in the inverter. Stopping of the drive must be ensured by the user. The idle state behavior (changeover to the *FCB19 Position hold control* drive function) is dependent on the parameterization of the SOS safety subfunction.

If the *Inverter control* parameter is set to "Active with limiting", the stop ramp of the inverter is limited to the following values:

- Minimum value of the SSx deceleration
- Maximum value of the parameterized jerk time

INFORMATION

Note the priorities of the drive functions (FCB).

If the *Inverter control* parameter is set to "Active" or "Active with limiting", the drive function (FCB) that is active at this time must have a lower priority than the *FCB 19 Position hold control* drive function when the SS2-r safety subfunction is activated.

33955948/EN – 05/2026

If this is not the case, the *FCB 19 Position hold control* drive function will not be activated, the stop ramp will not be initiated, and as a result the SOS safety subfunction will respond with a limit value violation after the deceleration.

The following drive functions (FCB) have a higher priority than the *FCB 19 Position hold control* drive function:

- FCB 12 Reference travel
- FCB 04 Manual mode
- FCB 20 Jog mode

Limitation

INFORMATION

The SS2-r safety subfunction must not be used in conjunction with the EI7C FS built-in encoder.

Activation

Number of instances: 2 (SSx1, SSx2)

The safety subfunction can be activated by the following sources:

- F-DI (function assignment)
- Safe process output data (SSx1, SSx2)

Status

The status of the safety subfunction is displayed in the following areas:

- Diagnostics > MOVISAFE® CS..A, speed function status
- Safe process input data (SSx1, SSx2)

Fault response on limit value violation

Due to the limit violation, the STO safety subfunction is activated without brake application delay.

The limit value violation must be acknowledged. By deactivating the SSx function, the limit value violation is not acknowledged. The SSx function cannot be reactivated with an existing limit value violation. It can only be acknowledged if the SSx function is deactivated. After acknowledgment, the final state of the SSx function is active immediately.

Fault response on encoder fault

If an encoder fault occurs, the STO safety subfunction is activated immediately without brake application delay. The status of the SSx function becomes inactive. The encoder fault must be acknowledged. The encoder fault cannot be acknowledged by deactivating the SSx function.

INFORMATION

If an SSx instance is assigned to another safety subfunction as a fault response, the SLI function cannot be parameterized as the final state.

33955948/EN – 05/2026

INFORMATION

An SLI instance must be enabled for the SLI final state.

SOS safety subfunction with MOVISAFE® CS..A

Functional description

The SOS safety subfunction monitors the drive position with the parameterized positional tolerance.

If the *Inverter control* parameter is set to "Active", activating the SOS safety subfunction results in the activation of the *FCB 19 Position hold control* drive function in the inverter.

If the *Inverter control* parameter is set to "Not active", activating the SOS safety subfunction does not result in the activation of the *FCB 19 Position hold control* drive function in the inverter. The user must use the correct controller to ensure that the drive remains in an idle state. The positive and negative limit position is determined based on the actual position and the parameterized positional tolerance detected upon activation of the SOS safety subfunction.

If the positive or negative limit position is exceeded, the fault response (STO) is triggered. After a limit value violation, acknowledgment leads to the limit positions being recalculated based on the current actual position.

Limitation

INFORMATION

The SOS safety subfunction must not be used in conjunction with the EI7C FS built-in encoder.

Activation

Number of instances: 1

The SOS safety subfunction can be activated via the following sources:

- F-DI (function assignment)
- Safe process output data (SOS1)
- Final state of SS2 or SLI

Status

If the SOS safety subfunction is activated and the determined limit positions are not exceeded, the status of the SOS safety subfunction is active. The status is displayed in the following areas:

- Diagnostics > MOVISAFE® CS, position function status
- Safe process input data (SOS1)

Fault response on limit value violation

When one of the limit positions is exceeded, the STO safety subfunction is activated without brake application delay as fault response.

33955948/EN – 05/2026

SLA safety subfunction with MOVISAFE® CS..A

Functional description

The SLA function monitors the acceleration within the parameterized limit values. If the SLA safety subfunction is activated, first the parameterized *Monitoring delay (8706.9)* applies. During the monitoring delay, the parameterized maximum speed (8707.1) is monitored. Then the monitoring of the parameterized speed ramp starts.

The actual acceleration is monitored based on the following conditions:

- The speed is greater than the parameterized *Minimum speed for acceleration functions (8707.6)*.
- The speed is increased.

If the speed is decreased, monitoring is not active.

An *error response (8706.32)* is triggered if the parameterized *Limit acceleration (8706.73)* is exceeded.

If the *Inverter control* parameter is set to "Active with limiting", the inverter acceleration is limited to the limit values of the SLA function minus the value set in the *Acceleration offset* parameter. This limit does not affect interpolating function control blocks (e.g. FCB 10).

An exceeded limit acceleration must be acknowledged. With the "Only F-PI" fault response, the status of the SLA function is reset automatically if the limit acceleration is held again. A safe protocol must be selected for this purpose.

Limitation

INFORMATION

The SLA safety subfunction cannot be used in combination with the EI7C FS built-in encoder.

Activation

Number of instances: 2

The SLA safety subfunction can be activated via the following sources:

- F-DI (function assignment)
- Safe process output data (SLA1, SLA2)
- Permanently activated

Status

If the SLA safety subfunction is activated and the limit values are not exceeded, the status of the SLA function is active. The status is displayed in the following areas:

- Diagnostics > MOVISAFE® CS..A, acceleration function status
- Safe process input data (SLA1, SLA2)

Fault response on limit value violation

If one of the monitoring limits is exceeded, one of the following parameterized error responses can be activated:

- STO

33955948/EN – 05/2026

- SSx1, SSx2

  The "SSx1" or "SSx2" error response can be selected only if the corresponding SSx instance is enabled.

- F-PI

  The fault response "F-PI" can only be selected if a safety protocol has been selected.

SLS safety subfunction with MOVISAFE® CS..A

Functional description

The SLS safety subfunction monitors the actual speed for exceeding the parameterized limit speed. When the limit speed is exceeded, the parameterized fault response is triggered.

The speed filter allows the limit speed to be exceeded "briefly" without triggering the fault response (see parameter *Speed filter*, index 8706.25).

Monitoring of the SLS limit speed or start of the transition ramp can be delayed using the *Monitoring delay t1* parameter. The actual speed is monitored for exceeding the parameterized maximum speed during the monitoring delay.

The *Ramp start at actual speed* parameter defines whether the monitoring ramp begins at the maximum speed or the actual speed.

If the *Ramp start at actual speed* parameter (8706.18) is set to "Yes" and the *Ramp monitoring* parameter is set to "linear", the monitoring of the linear speed ramp begins at the currently detected actual speed after the SLS safety subfunction is activated. The end speed of the speed ramp is the parameterized limit speed.

If the *Ramp start at actual speed* (8706.18) parameter is set to "Yes" and the *Ramp monitoring* parameter is set to "jerk-limited", monitoring of the jerk-limited speed ramp starts at the sum of the currently detected actual speed plus the parameterized offset speed after the SLS safety subfunction is activated. The end speed of the speed ramp is the parameterized limit speed.

If the *Ramp start at actual speed* (8706.18) parameter is set to "No", the transition ramp begins at the lowest, previously monitored limit speed.

If no other SLS safety subfunction is activated, the parameterized maximum speed is used as the lowest, previously monitored limit speed.

The lowest, previously monitored limit speed is the lowest parameterized limit speed of all activated SLS instances that meet all the following conditions:

- The transition ramp is completed.
- Both effective directions are monitored or the monitored effective direction is identical to the current speed.
- The limit speed or the speed filter have not been exceeded.

If the lowest monitored limit speed is lower than the parameterized limit speed of the last activated SLS, no transition ramp is calculated, but rather the limit speed is immediately monitored.

Use the *Effective direction* parameter to define the direction of rotation in which the SLS function is effective:

- Only in positive rotation
- Only in negative rotation
- In both directions of rotation
- The maximum speed must not be exceeded during movement against the effective direction.

33955948/EN – 05/2026

If the *Inverter control* parameter is set to "Not active", the inverter is not controlled. If the *Inverter control* parameter is set to "Active with limiting", the following inverter values are limited to these values:

- Minimum value of the deceleration
- Maximum value of the parameterized jerk time
- Speed:

  Maximum limit speed – SLS distance to the limit speed

This limit does not affect interpolating FCBs (e.g. FCB 10).

Activation

Number of instances: 4

The SLS safety subfunction can be activated via the following sources:

- F-DI (function assignment)
- Safe process output data (SLS 1, SLS 2, SLS 3, SLS 4)
- Permanently activated

Status

If the SLS function is activated and the transition ramp is completed, the status of the SLS function is active. If the limit speed is exceeded, the status is deactivated.

The status is displayed in the following areas:

- Diagnostics > MOVISAFE® CS..A, speed function status
- Safe process input data (SLS1, SLS2, SLS3, SLS4)

Fault response on limit value violation

One of the following parameterized fault responses can be activated:

- STO
- SSx1, SSx2

  The "SSx1" or "SSx2" fault response can be selected only if the corresponding SSx instance is enabled.

SSR safety subfunction with MOVISAFE® CS..A

Functional description

The SSR function monitors the motor speed within the parameterized speed limits. The parameterized fault response is triggered if the limit values are exceeded. The drive is stopped with the STO or SS1 safety subfunctions, or the information that the limit values were exceeded is transmitted to a safety controller via the safe process data.

When limit values are exceeded and the fault response is STO or SSx, then the fault response must be acknowledged. No acknowledgment is required if the information that limit values were exceeded is reported to a safe controller. When the speed drops below the limit value, the status of the safety subfunctions is set again, taking the parameterized *Speed hysteresis v1 (8706.57)* into consideration.

Once the safety subfunctions have been activated, the actual speed is monitored for exceeding the maximum speed for the duration of the monitoring delay. After this time, the actual speed is monitored for leaving the range of upper and lower limit speed. Both the upper and the lower limit speed can be positive and negative.

3955948/EN – 05/2026

A speed filter can be set for the SSR function. If a speed filter is set, it will be calculated separately for the upper and lower limit speed.

The distance between the upper and lower SSR limit speed must be greater than twice the value of the parameterized *Speed hysteresis v1 (8706.57)*.

Activation

Number of instances: 2

The SSR safety subfunctions can be activated via the following sources:

- F-DI (function assignment)
- Safe process output data (SSR1, SSR2)
- Permanently activated

Status

The status of the SSR safety subfunction is active if the SSR function is activated and the current speed is within the limit speeds. If the limit speed is exceeded, the status of the SSR function is deactivated. If the actual speed is within the limit values taking into account the speed hysteresis, the status of the SSR safety subfunction changes back to "1". A parameterized speed filter delays the status change. An acknowledgment in an idle state or below the limit speed resets the speed filter and the status immediately changes to "1".

The status is displayed in the following areas:

- Diagnostics > MOVISAFE® CS..A, speed function status
- Safe process input data (SSR1, SSR2)

Fault response on limit value violation

If one of the limit speeds is exceeded, one of the following parameterized fault responses can be activated:

- STO
- SSx1, SSx2

  The "SSx1" or "SSx2" error response can be selected only if the corresponding SSx instance is enabled.
- Only F-PI

  The fault response "F-PI" can only be selected if a safe protocol has been selected.

SSM safety subfunction with MOVISAFE® CS..A

Functional description

The SSM function provides a safe output signal on the safe process data to indicate whether the speed is below a specified limit value.

A speed filter can be activated for each instance of the SSM function. The speed filter integrates the speeds exceeding the speed limit along the track. If the track is longer than the parameterized track, feedback is provided by the corresponding status message.

Use the *Effective direction* parameter to determine in which direction the SSM function should be effective (positive, negative, or both directions) for each SSM function.

Do not exceed the maximum speed while moving against the effective direction.

33955948/EN – 05/2026

If the SSM function is activated, the speed hysteresis must be lower than the limit speed.

Activation

Number of instances: 4

The SSM function is active if the limit value is not "0".

Status

If the limit values are exceeded, the status of the SSM safety subfunction switches to "0". Taking the speed hysteresis into consideration, if the actual speed is below the limit value, the status of the SSM safety subfunction changes back to "1". A parameterized speed filter delays the status change. An acknowledgment in an idle state or below the limit speed resets the speed filter and the status immediately changes to "1".

The status is displayed in the following areas:

- Diagnostics > MOVISAFE® CS..A, speed function status
- Safe process input data (SSM1, SSM2, SSM3, SSM4)

Fault response on limit value violation

No fault response on limit value violation.

Speed filter

The speed filter can be parameterized with the SLS, SSM and SSR function. The speed filter makes it possible to exceed the speed limit "briefly" without triggering the error response. The speed filter is activated if the filter is > "0".

This additional functionality allows you to filter speed peaks in the event of an unbalanced operation (speed peaks in the signal). Starting from the difference between the current speed and the parameterized speed monitoring value, the distance integral is calculated and compared with the entered value. If the entered value is exceeded, the safety subfunction is triggered and the status of the safety subfunction changes from "1" to "0".

33955948/EN – 05/2026

The following figure shows an example of the speed filter:

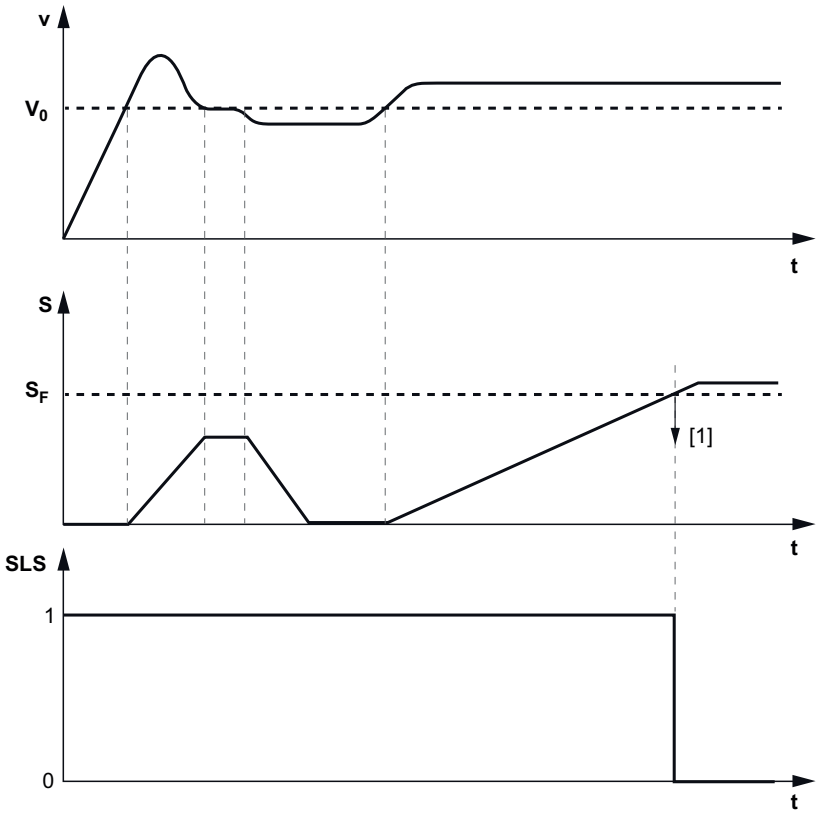

43176130443

[1] Response

A drive exceeds the threshold "v_0" parameterized in the SLS safety subfunction. When the threshold "v_0" is exceeded, the speed above the threshold is integrated (S). If the current speed changes again to a value that is below the parameterized threshold "v_0", the integral also decreases again to "0". The speed then rises again and remains above the parameterized threshold "v_0". As a result, the integral increases again and, when the filter value (S_F) is exceeded, triggers the corresponding response [1] (here: SLS safety subfunction). The status changes from "1" to "0". You can record the trend of the error value in the scope.

- SLS speed filter 8700.52 (offset 0 – 3)
- SLS speed filter in user units 8700.53 (offset 0 – 3)
- SSM speed filter 8700.54 (offset 0 – 1)
- SSM speed filter in user units 8700.55 (offset 0 – 1)
- SSR speed filter upper limit speed 8700.56 (offset 0 – 1)
- SSR speed filter upper limit speed in user units 8700.57 (offset 0 – 1)
- SSR speed filter lower limit speed 8700.58 (offset 0 – 1)
- SSR speed filter lower limit speed in user units 8700.59 (offset 0 – 1)

For the initial startup of the speed filter, it is sensible to record the speed curve using the scope. In the first approximation, this maximum value can be used as the filter value for the speed filter, taking possible tolerances into consideration.

33955948/EN – 05/2026

SDI safety subfunction with MOVISAFE® CS..A

Functional description

The SDI function monitors the movement in the blocked direction of rotation. The STO safety subfunction is activated when the configured tolerance is violated.

The function can be activated by means of a safe digital input F-DI via safe process data (SDI 1, SDI 2), or the function can be activated permanently via the parameterization.

When the SDI safety subfunction is activated, the limit position is calculated based on the actual position detected by the encoder system at this point in time and the *Tolerance* and *Permitted direction of movement* parameters. The limit position is corrected for movements in the permitted direction of movement, which means the limit position is recalculated cyclically from the current actual position and the tolerance. This means the maximum distance to the actual position is the configured tolerance. The maximum speed may not be exceeded during the movement. In case of movement in the inhibited direction of movement or if a limit position is exceeded, a fault response is issued. The limit position is calculated again during acknowledgment after violation of a limit value, or after an encoder error. The position on which the recalculation is based is the actual position detected at the time of acknowledgment. The SDI function does not monitor the speed.

Activation

Number of instances: 2

The SDI safety subfunction can be activated via the following sources:

- F-DI (function assignment)
- Safe process output data (SDI1, SDI2)
- Permanently activated

Status

If the SDI safety subfunction is activated and no movement is detected in the monitored direction of rotation, the status of the SDI function is active. The status of the SDI function is deactivated if movement in the monitored direction of rotation over the parameterized tolerance is detected.

The status of the SDI safety subfunction is displayed in the following areas:

- Diagnostics > MOVISAFE® CS..A, position function status
- Safe process input data (SDI1, SDI2)

Fault response on limit value violation

If the limit position is exceeded, the STO safety subfunction is activated without a brake application delay as a fault response.

SLI safety subfunction with MOVISAFE® CS..A

Functional description

The SLI safety subfunction can be used to implement safe, relative position functions. The SLI function monitors whether the set limits are exceeded. The defined limits are calculated based on the settings of the following parameters:

- *Increment*
- *Deceleration a*

33955948/EN – 05/2026

- *Effective direction*
- *Maximum speed*

INFORMATION

The SLI function and SLI increment enable must not be activated at the same time. With simultaneous control, the parameterized stop state is not canceled.

When the SLI function is activated, first the parameterized stop state is activated. The "STO stop state" or "SOS stop state" setting can then be used to deactivate the stop state by a 0 → 1 edge of SLI increment enable, and the SLI function can monitor the parameterized limits. The "SOS stop state" can only be used if the SOS safety subfunction has been parameterized and the *Control inverter* parameter is set to "Active".

If the stop state is parameterized to "No stop state", the parameterized limits are monitored without prior increment enable.

The limits are calculated based on the current position upon activation of monitoring. The monitoring curve in the effective direction comprises the set increment and delay.

The SLI increment enable deactivates the stop state and calculates the limit position:

- Positive limit position: Actual position plus increment
- Negative limit position: Actual position minus increment

The stop state is activated immediately when SLI increment enable is revoked. With the next increment enable, the limits are recalculated based on the actual position. After a limit value violation, the error is reset and the actual position is reset by acknowledging.

Activation

Number of instances: 2

The SLI safety subfunction can be activated via the following sources:

- F-DI (function assignment)
- Safe process output data (SLI1, SLI2)
- SSx1, SSx2 final state

SLI increment enable

Number of instances: 1

The SLI increment enable is not time limited and is activated by a 0 → 1 edge on one of the following sources:

- F-DI (function assignment)
- Safe process output data (SLI increment enable)

Status

The status of the SLI safety subfunction is displayed in the following areas:

- Diagnostics > MOVISAFE® CS..A, acceleration function status
- Safe process output data (SLI1, SLI2)

The status of the SLI safety subfunction is active as soon as the safety subfunction has been activated and no limit value has been exceeded. In the stop state, the status bits of the STO and SOS safety subfunctions behave as described in the safety subfunctions.

33955948/EN – 05/2026

Fault response on limit value violation

The STO safety subfunction without brake application delay is activated as fault response in one of the following cases:

- If a limit position is exceeded.
- If the braking distance in direction of movement in the parameterized effective direction is larger than the distance to the limit position.

Encoder fault muting



⚠ WARNING

The active "Encoder fault muting" function deactivates the encoder-dependent safety subfunctions (except STO). This can cause the system to start up immediately.

Death or serious injury.

- Before activating the "Encoder fault muting" function, the user must take organizational measures for the protection of personnel and machinery.
- The "Encoder error muting" function must be activated by the machine operator.

The "Encoder fault muting" function can be activated by a safe digital input F-DI, by the safe process output data (F-PO) or by starting the emergency mode with the keypad. The activated "Encoder fault muting" function is signaled on the LED F-ERR by rapid yellow flashing. The "Encoder fault muting" function has the following effects:

- Opening of the internal safe digital output F-DO_STO is suppressed due to the encoder fault response.
- The fault responses of all safety subfunctions are suppressed.
- The *Muting* bit is set in the safe process input data.
- The *Fault status* bit is set in the safe process input data.
- The safe process data bit *F-PI-ErrorState* remains set.
- The error code continues to be displayed.
- The STO safety subfunction can continue to be used without restrictions. All safety subfunctions used by encoders that are muted must be deactivated.

The "Encoder fault muting" function is automatically terminated in the following cases:

- Another fault (e.g. input fault) is present or has been detected.
- An error is acknowledged.
- 1 to 60 minutes after activation via F-DI or F-PO. This time period is adjusted via the *Maximum muting time* parameter.
- 5 minutes after activation via the emergency mode

If the "Encoder fault muting" function has been automatically deactivated, all sources must first cancel activation before another activation.

Each time the "Encoder fault muting" function is terminated, the start inhibit is activated.

The "Encoder fault muting" function can be started again despite active start inhibit. The start inhibit is canceled by an active function "Encoder fault muting". The error message *E46.50 (warning safety option)* on the device remains.

33955948/EN – 05/2026

Muting safe process output data (muting F-PO)



⚠ WARNING

The active "Muting F-PO" function deactivates the safety subfunctions. This can cause the system to start up immediately.

Death or serious injury.

- Before activating the "Muting F-PO" function, the user must take organizational measures for the protection of personnel and machinery.
- The "Muting F-PA" function must be activated by the machine operator.

The "Muting safe process output data" function is activated by a 0 → 1 edge at a safe digital input F-DI or by starting the emergency mode using the keypad. The activated "Muting F-PO" function is signaled on the LED F-ERR by rapid yellow flashing. The "Muting F-PO" function has the following effects:

- Opening of the internal safe digital output F-DO_STO is suppressed due to the substitute values of the F-PO data.
- The fault responses of all safety subfunctions are suppressed.
- Activating the STO safety subfunction is still possible without any restrictions using a safe digital input F-DI.

The "Muting F-PO" function is automatically terminated in the following cases:

- Another fault (e.g. input fault) is present or has been detected.
- An error is acknowledged.
- 1 to 60 minutes after activation via F-DI or the keypad. This time period is adjusted via the *Maximum muting time* parameter.
- 5 minutes after activation via the emergency mode
- Connection to the keypad is interrupted if the "Muting F-PO" function was activated using the keypad.

After automatic deactivation of the "Muting F-PO" function, all sources must revoke their activation prior to a new activation of the function.

Every time the "Muting F-PO" function finishes, the start inhibit is activated.

The "Muting F-PO" function can be started again despite active start inhibit. The start inhibit is canceled by an active function "muting F-PO". The error message *E-46.50 (warning safety option)* on the device remains active.

EDM muting



⚠ WARNING

The active "Muting EDM" function deactivates the safety subfunctions. This can cause the system to start up immediately.

Severe or fatal injuries.

- Before activating the "Muting EDM" function, the user must take organizational measures for the protection of personnel and machinery.
- The "EDM muting" function must be activated by the operator.

The "EDM muting" function is activated by starting the emergency mode with the keypad. The activated "EDM muting" function is signaled on the LED F-ERR by rapid yellow flashing. The "EDM muting" function has the following effects:

- The activation of the EDM fault response is suppressed. This means that opening the internal safe digital output F-DO_STO is suppressed.
- The fault responses of all safety subfunctions are suppressed.

The "EDM muting" function is automatically terminated in the following cases:

- Another error is present or has been detected.
- An error is acknowledged.
- 1 to 60 minutes after activation via the keypad. This time period is adjusted via the *Maximum muting time* parameter.
- 5 minutes after activation via emergency mode.
- Connection to the keypad is interrupted if the "EDM muting" function was activated using the keypad.

After automatic deactivation of the "EDM muting" function, all sources must revoke their activation prior to a new activation of the function.

Every time the "EDM muting" function finishes, the start inhibit is activated.

The "EDM muting" function can be started again despite active start inhibit. The start inhibit is canceled by an active "EDM muting" function. The error message *E-46.50 (warning safety option)* on the device remains active.

Test mode

The limit value violation of the safety subfunctions SS1, SS2, and SOS can be tested when test mode is active.

The test mode suppresses the basic device control (FCB selection).

The test mode is activated by a rising edge (0 → 1) at a safe digital input or via the safe process output data (F-PO).

The status of the test mode is signaled by the safe process data (process data bit: Test mode active), in the "Assist CS.." parameterization tool and via the LED display.

The test mode is automatically exited in the following cases:

- During parameterization of the safety option.
- By opening the internal safe digital output F-DO_STO (e.g. fault response, limit violation, activation of STO safety subfunction).
- 5 minutes after activation.

Once it automatically finishes, the test mode can be activated again with a rising edge.

EDM safety subfunction with MOVISAFE® CS..A

The EDM (External Device Monitoring) safety subfunction diagnoses the connection of the external, safe digital outputs F-DO.. The EDM function uses one or several safe digital inputs F-DI.. to monitor external switching elements connected to a safe digital output. To that end, the auxiliary contacts of the external switching element are connected to the safe digital inputs F-DI.. of the CS..A safety option.

The EDM function permanently compares the logical output signal of the safe digital output F-DO.. with the logical input signals of the assigned safe digital inputs F-DI.

33955948/EN – 05/2026

If the expected logical signals are not detected once the monitoring time has lapsed, the configured fault response is triggered and the affected safe digital output F-DO.. is disabled. If the F-DO.. has the "closed" switching state and there is a voltage present, the *Operating time T_1 (8705.32)* is used as the monitoring time. If the F-DO.. has the "open" switching state and there is no voltage present on the F-DO.., the *Fall time T_2 (8705.33)* is used as the monitoring time. The *Operating time T_1 (8705.32)* and *Fall time T_2 (8705.33)* monitoring times must be greater than the input filter time. Furthermore, the discrepancy time in the monitoring time must be taken into account for a 2-channel safe digital input. The *Operating time T_1 (8705.32)* and *Fall time T_2 (8705.33)* monitoring times should be configured to the same value. If there is an applicative need for different values, the signal can change again upon expiry of a longer period of time.

The monitoring time begins again with every change in the logical F-DO signal. If the auxiliary contact's signal bounces, the bouncing must be filtered out via the *Input filter time (8704.2)* of the F-DI.. If the F-DO.. is consistently controlled and after the monitoring time has lapsed, a level change in the input signal must trigger the execution of the error response.

An EDM instance can be enabled for the safe digital output F-DO00:

- EDM 1 on F-DO00

Each EDM instance can be assigned 1 or 2 F-DI.. The F-DI.. must not be parameterized interlocking. The auxiliary contacts of the external switching element can be designed as an NO contact or typically as an NC contact. The user is responsible for ensuring its safety-related suitability.

The following tables show all the error-free combinations of the input and output signals.

- 1 auxiliary contact of type NO contact

F-DO00	F-DI..
0	0
1	1

- 1 auxiliary contact of type NC contact

F-DO00	F-DI..
0	1
1	0

- 2 auxiliary contacts of type NO contact

F-DO00	F-DI0	F-DI1
0	0	0
1	1	1

- 2 auxiliary contacts of type NC contact

F-DO00	F-DI0	F-DI1
0	1	1
1	0	0

Activation

Number of instances: 1

The EDM instance is permanently activated with the enable.

33955948/EN – 05/2026

Status

The status of the EDM safety subfunction is "1" if the function is enabled and the fault response is not executed. The status of all EDM instances is transferred to the safe process output data. The EDM status bit has the value "1" if the status of all enabled EDM functions is "1".

The status of the EDM safety subfunction is "0" if the EDM instance is not enabled or a fault response is executed.

Fault response

If the expected logical signals are not detected once the monitoring time has lapsed, the configured fault response is carried out:

- STO
- SSx1
- SSx2
- Only F-PI

  The fault response "F-PI" can only be carried out if a safe protocol has been selected.

In addition to the configured fault response, the EDM output is switched off.

The fault response is also carried out if a fault is detected on one of the inputs assigned to the EDM function.

The fault response is carried out until an acknowledgment is made.

11.17.7 Startup of the safety option at the safety protocol

Requirements for safe communication

The user must ensure the IT safety of the safety protocol network according to EN 61508.

INFORMATION

Before making changes to the set safety protocol at the CS..A safety option, you must physically disconnect the connection to the safe control (F-host).

PROFIsafe safety protocol

INFORMATION

To control failsafe functions and to evaluate the responses from the CS..A safety option via PROFIsafe, the assignment of the individual bits within the safety protocol must be taken into account.

Requirements

- The CS..A safety option supports PROFIsafe versions 2.4 and 2.6.
- The higher-level F-PLC must support the iPar CRC mechanism.
- For a successful startup, you need the "Assist CS.." parameterization tool.
- Additional requirements when using MOVISAFE® CS..A with PROFIsafe via PROFINET fieldbus connection:
  - TIA portal with STEP7 Safety option (for Siemens controllers)

33955948/EN – 05/2026

  - Device description file of MOVITRAC® advanced or the MOVI-C® CONTROLLER in use.

    Download at www.sew-eurodrive.com. Always use the latest device description file (iPar_CRC for default parameterization: D9FEE686).

- It must be ensured that the current version of the device description file is installed so that the safety option can be configured correctly in the device configuration. The safety option must be configured in the device configuration via drag and drop from the hardware catalog into the slot of the SEW-EURODRIVE drive system enabled for it. The following settings must be checked so that fault-free PROFIsafe communication with the safety option can be established:
  - F-Source address (F_Source_Add)
  - F-Destination address (F_Dest_Add)
  - F-Monitoring time (F_WD_Time)
  - F-iParameter CRC (F_iPar_CRC)

INFORMATION

The PROFIsafe addresses must be unique in the existing network structure. Depending on the network structure, the safety option can be configured via the *Address type* parameter to ensure the required uniqueness.

Safety option settings

As well as parameterization of the safety subfunctions, the corresponding safety protocol and the destination addresses must be set during startup.

Setting the safety protocol

The CS..A safety option supports several safety protocols. Select "PROFIsafe" under [F-communication] > [Configuration] in the "Assist CS.." parameterization tool.

Setting the destination address

The destination address must be identical with the address set for the device in the PROFIsafe host. Enter the correct destination address under [F-communication] > [Configuration] > [PROFIsafe]. The destination addresses used must be unique in the fieldbus network.

Setting the address type

Selecting address type 1 or 2 defines whether the PROFIsafe station is assigned exclusively via the destination address or whether the source address is also used.

33955948/EN – 05/2026

PROFIsafe host settings

The settings that must be made at the PROFIsafe host are shown in an example for an S71500F in the TIA portal. Transfer the F_iPar_CRC of the report to the PROFIsafe host after successful startup of the CS..A safety option.

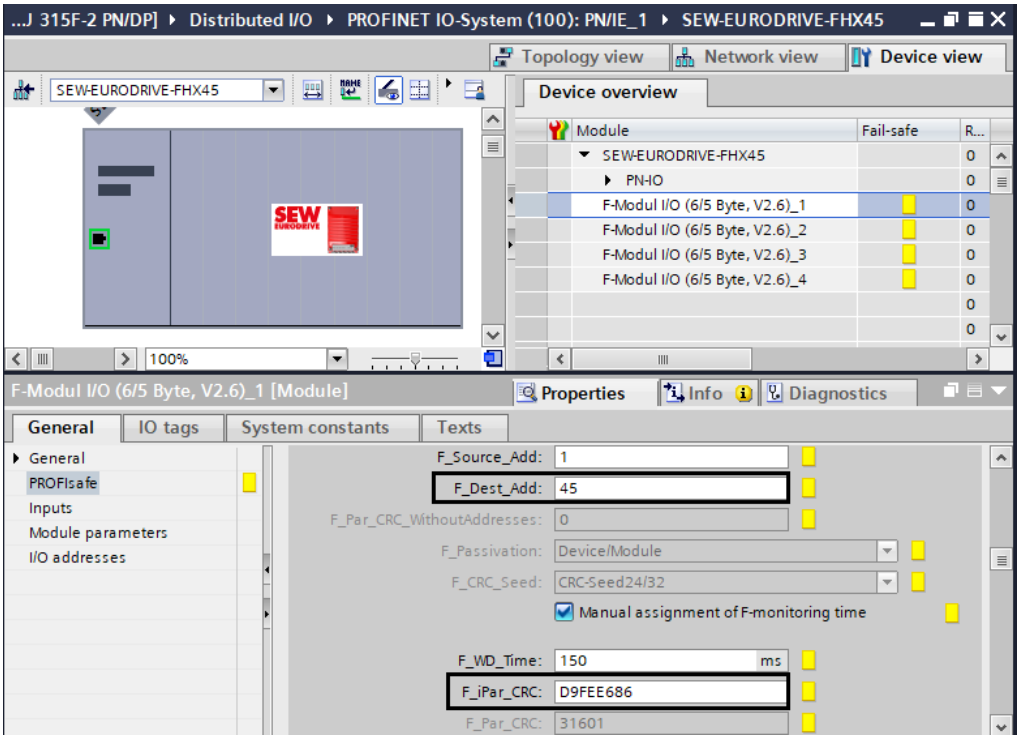

9007227555231883

To enable the safety option in the higher-level controller to issue a diagnostic alarm, the diagnostic alarm must be enabled for the module in the device configuration.

Safety over EtherCAT® safety protocol

Requirements

- For communication via the Safety over EtherCAT® safety protocol, the CS..A safety option must be connected to a safety controller with Safety over EtherCAT® main device functionality.
- Firmware version 4.01 or later is required for the CS..A safety option.
- Firmware version 9.00 or later is required for the basic devices.
- MOVISUITE® engineering software version 2.30 or later (download from www.sew-eurodrive.com).
- Additional requirements when using MOVISAFE® CS..A with Safety over EtherCAT® fieldbus interface:
  - ESI device description file (EtherCAT® XML/ESI files for MOVI-C® MOVITRAC® advanced, MOVI-C® MOVITRAC® advanced with CiA402). Download from www.sew-eurodrive.com. Always use the latest device description file.

Safety option settings

As well as parameterization of the safety subfunctions, the corresponding safety protocol and the F-address must be set during startup.

33955948/EN – 05/2026

Setting the safety protocol

The CS..A safety option supports several safety protocols. To do so, select "FSoE" under [F-communication] > [Configuration].

Setting the F-address

The F-address must be identical to the address set for the station in the Safety over EtherCAT® main device. Enter the correct F-address under the [F-communication] > [Configuration] > [FSoE] menu item. The used F-addresses must be unique within the Safety over EtherCAT® network.

Setting the ParCRC bus

Transfer the ParCRC bus from the acceptance report of the safety option into the safety controller.

3. F-communication

Line	Property	Value
186	Version	2
187	F-protocol type	FSoE
188	FSoE slave - F-address	45
189	ParCrcBus	0x6c5128cc

9007227555225483

Setting Safety over EtherCAT® main device SCU-1/EC in the SafePLC2 configuration tool

The devices with the MOVISAFE ® CS..A safety options are implemented and available as of version SafePLC2 1.7.1.8081.

Proceed as follows:

1. Start the SafePLC2 configuration tool.

2. Integrate a corresponding Safety over EtherCAT® main device into the project.

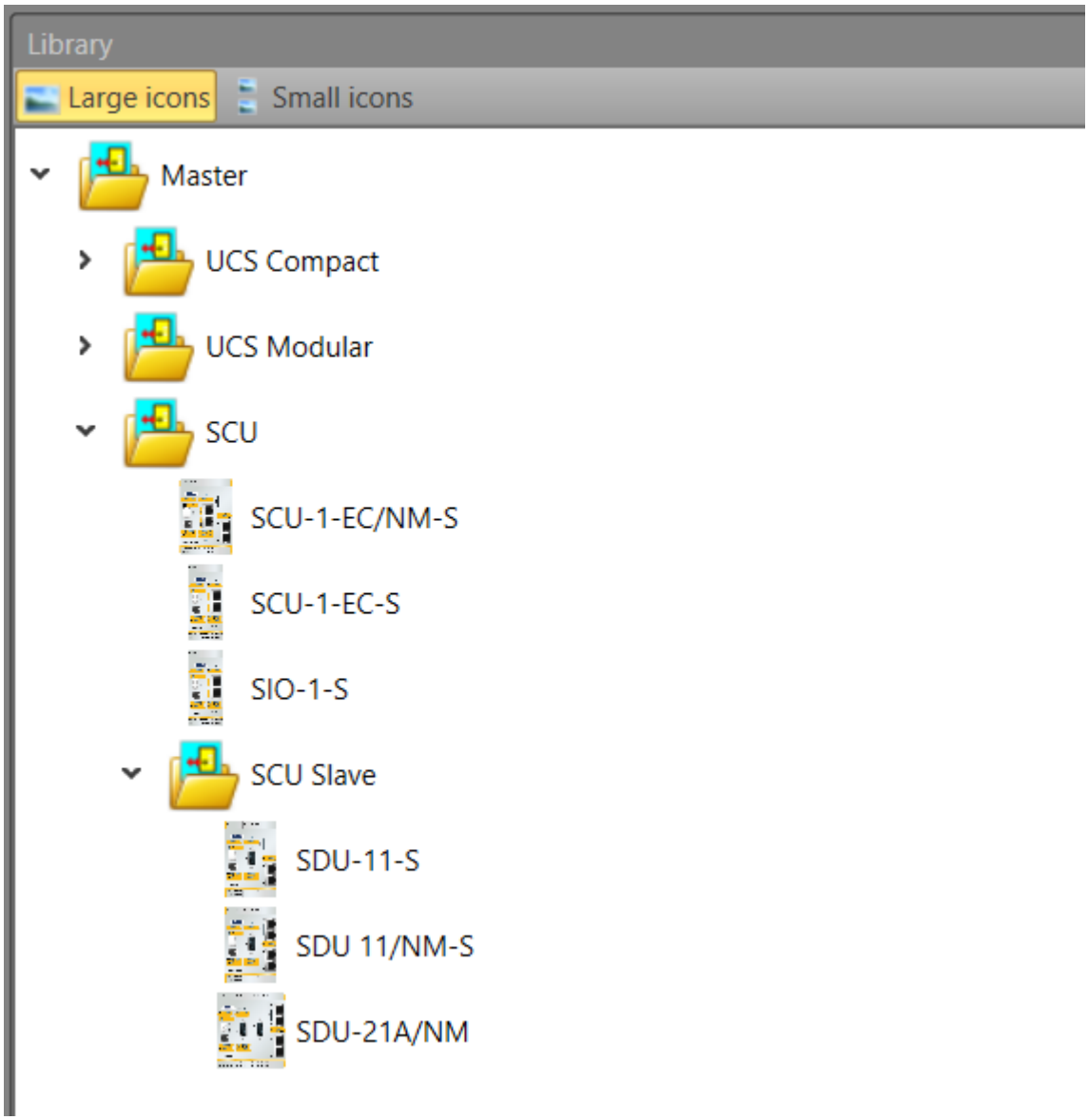

33765177227

3. The devices are available in the library under [Slaves] > [Axis]. Add a device into the project according to the wiring diagram.

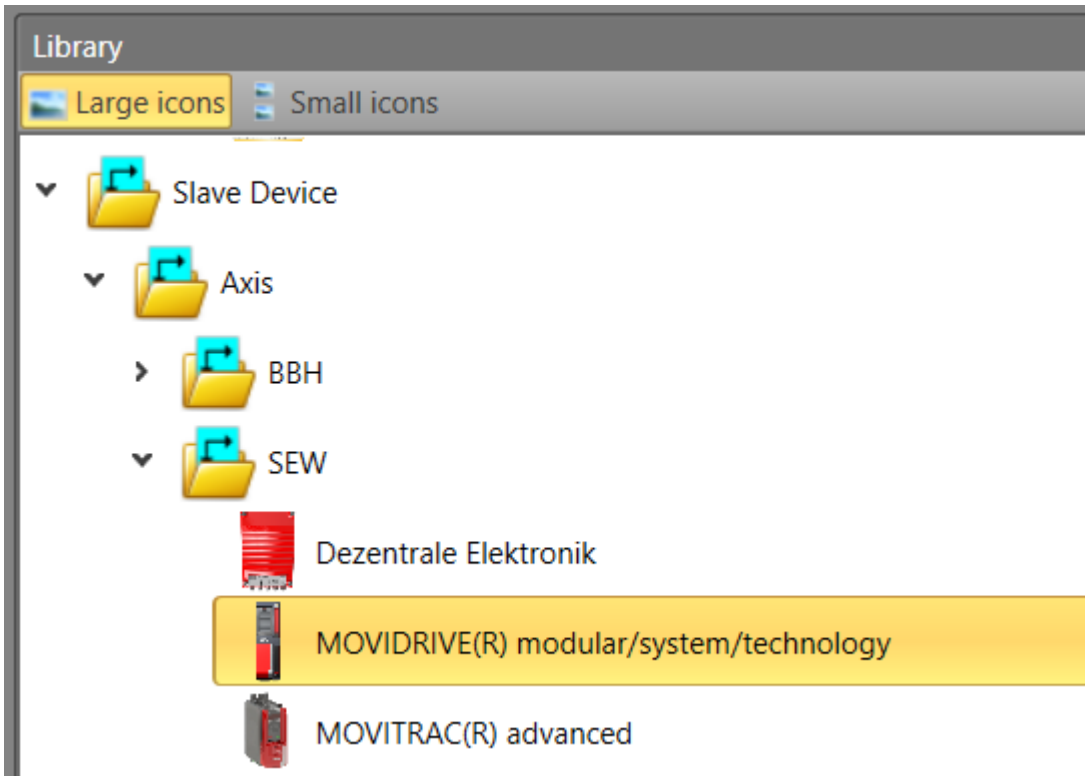

33765173131

4. Select the profile matching the safety option used.

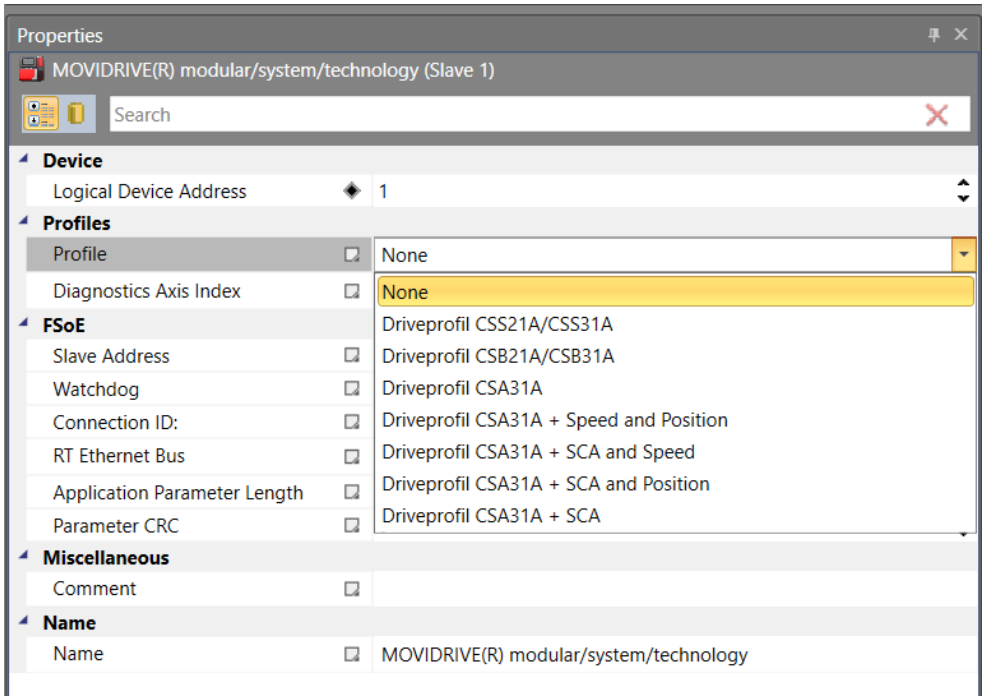

33765168651

5. Make the required settings.

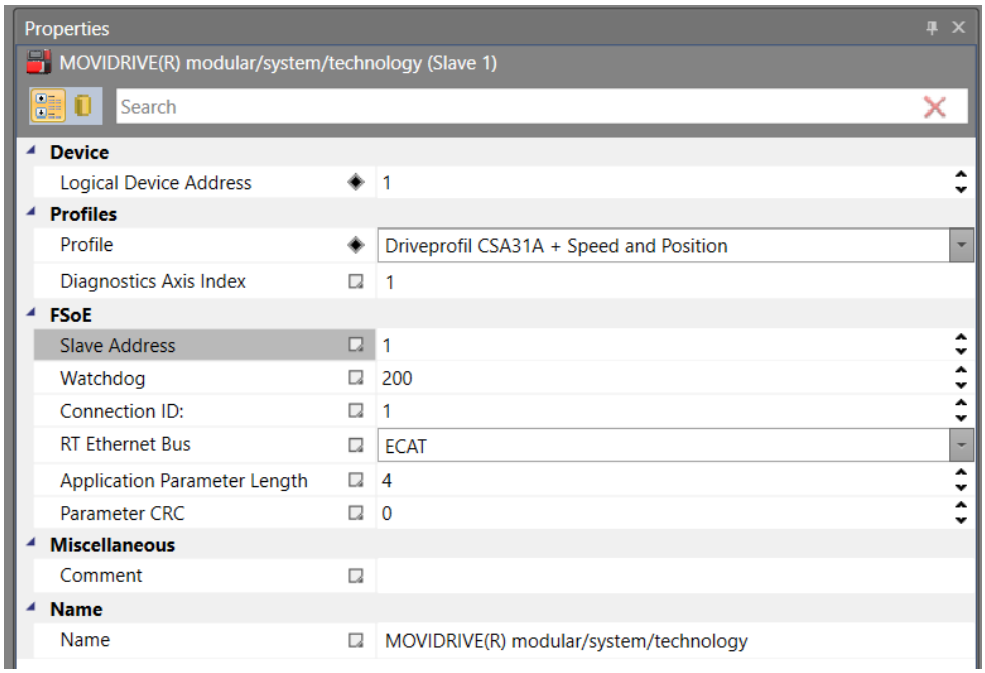

33765375371

- "Slave address" choice box

  Here you select the Safety over EtherCAT® address specified in the "Assist CS.." parameterization tool in MOVISUITE®.

- "Watchdog time" choice box

  Transmission is monitored via timers (watchdog) that are checked in each Safety over EtherCAT® station in the network. In this way, an interruption in the transmission can be reliably detected. Default: 200 ms. Recommended: 250 ms.

- "Connection ID" choice box

  Set this value to "1".

- "RT Ethernet Bus" drop-down list

  The clock-synchronous EtherCAT® is connected to the SCU at "ECAT in" and "ECAT out". Choose "ECAT".

- "Application Parameter Length" choice box

  Set this value to "4".

- "Parameter CRC" choice box

  For this value, refer to MOVISUITE® once you have successfully parameterized the CS..A safety option using the "Assist CS.." parameterization tool.

6. Call up the function block diagram.

33955948/EN – 05/2026

7. After creating the appropriate profile, transfer this profile to the function block diagram of the SafePLC2 configuration tool using the corresponding green arrow.

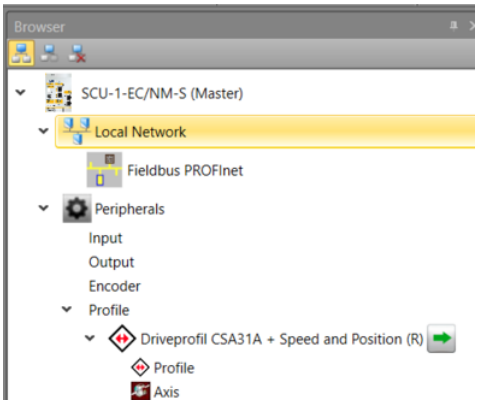

33764895755

8. In the function block diagram of the SafePLC2 configuration tool, you now have access to all available safety subfunctions of the safety option.

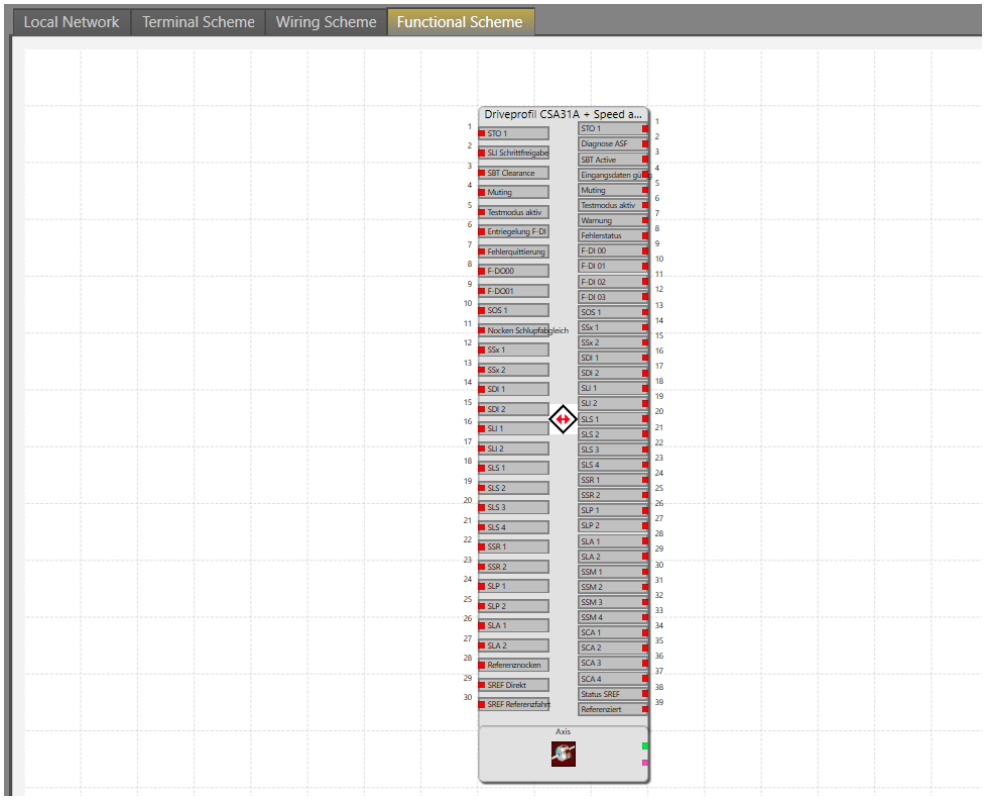

33764891275

9. Load the configuration into the Safety over EtherCAT® main device module SCU.

Requirements in the IEC Editor

In order to use Safety over EtherCAT® communication between the Safety over EtherCAT® main device module SCU and the safety options in the inverter, it is necessary to activate this in the project settings in the IEC Editor.

Proceed as follows:

1. Create or open a corresponding IEC project or MOVISUITE® project.
2. Click the [Project] > [Project Settings] menu item in the IEC Editor.

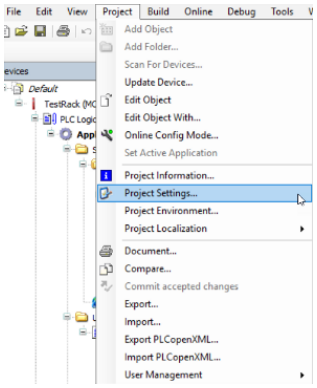

33037484171

3. Under "Project Settings", select the "FSoE Router" entry. In the "FSoE Router" window, activate the "FSoE Routing Enabled" check box and confirm your setting with [OK].

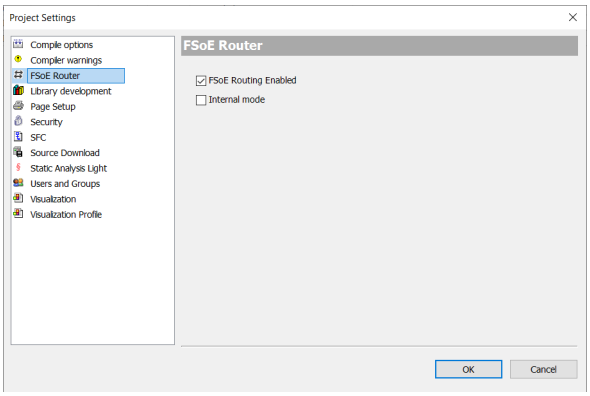

33037456139

Startup in the IEC Editor

Requirements

- FSoE routing is activated.
- The safety program with the safety options used has been loaded onto the safety controller.
- The safety controller is physically integrated in the EtherCAT® string.
- The safety controller is scanned in the EtherCAT® string by software and the corresponding defined profiles are visible in the IEC Editor.

33955948/EN – 05/2026

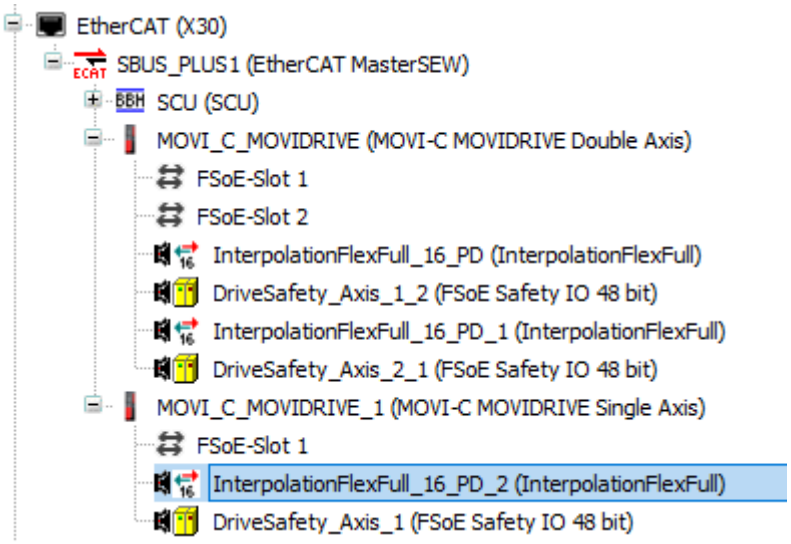

33764887307

Proceed in the following order:

1. Double-click an FSoE slot of the safety option used. The allocation window opens.

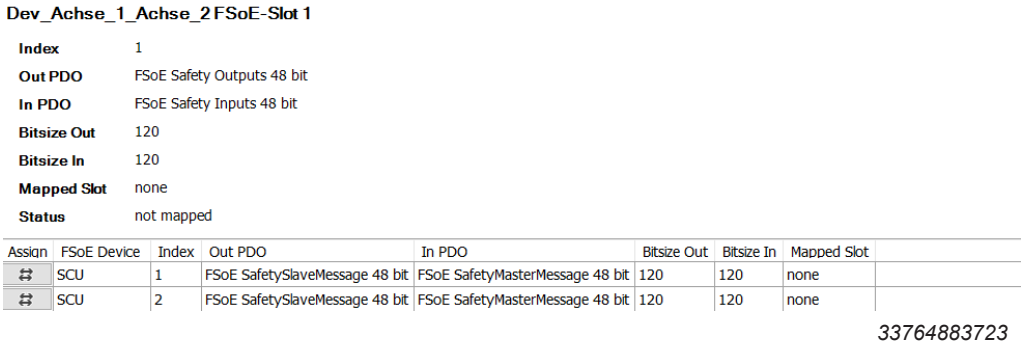

33764883723

2. Assign a free FSoE slot to the safety controller.
3. Repeat these steps for all FSoE slots.
4. Log on the project on the safety controller.
5. Upload the configuration to the SEW-EURODRIVE controller.
6. Create a boot project.
7. Restart the system.

CIP Safety™ safety protocol

Requirements

- For communication via CIP Safety™, the safety option must be connected to a fail-safe controller (F-originator) via EtherNet/IP™.
- To ensure that the safety option (target) can be configured correctly in the engineering tool of the fail-safe controller, it must be ensured that the current version of the electronic data sheet file (EDS file) is installed.
- Firmware version 4.01 or later is required for the CS..A safety option.
- Firmware version 9.00 or later is required for MOVITRAC® advanced.

- Firmware version 5.00 or later is required for the CFE fieldbus option.
- MOVISUITE® engineering software version 2.30 or later (download at www.sew-eurodrive.com).

General information

MOVISUITE® must be installed for startup. The following steps must be performed beforehand:

- Assign an IP address to the device.
- Establish a connection to the SEW-EURODRIVE device.
- Make sure that the Rockwell Controller is also connected.

Starting up communication via CIP Safety™

There are basically 2 ways to start up communication via CIP Safety™:

1. With safety mechanisms: Assign the ID of the safety target via CIP™.
2. With safety mechanisms: Assign the ID of the safety target via parameterization.

Assigning a safety target via CIP™

This chapter describes the basic procedure for starting up the CIP Safety™ communication when the connection parameters are assigned by the connection tool of the originator via CIP™. Both parts – MOVISUITE® and RSLogix – are described.

MOVISUITE®

To configure the CIP Safety™ communication in MOVISUITE® using the integrated "Assist CS..." software tool, you must perform the following steps.

1. Scan the device.

33955948/EN – 05/2026

2. Right-click the upper half of the device. In the "Tools" context menu, select the software tool "Assist CS..".

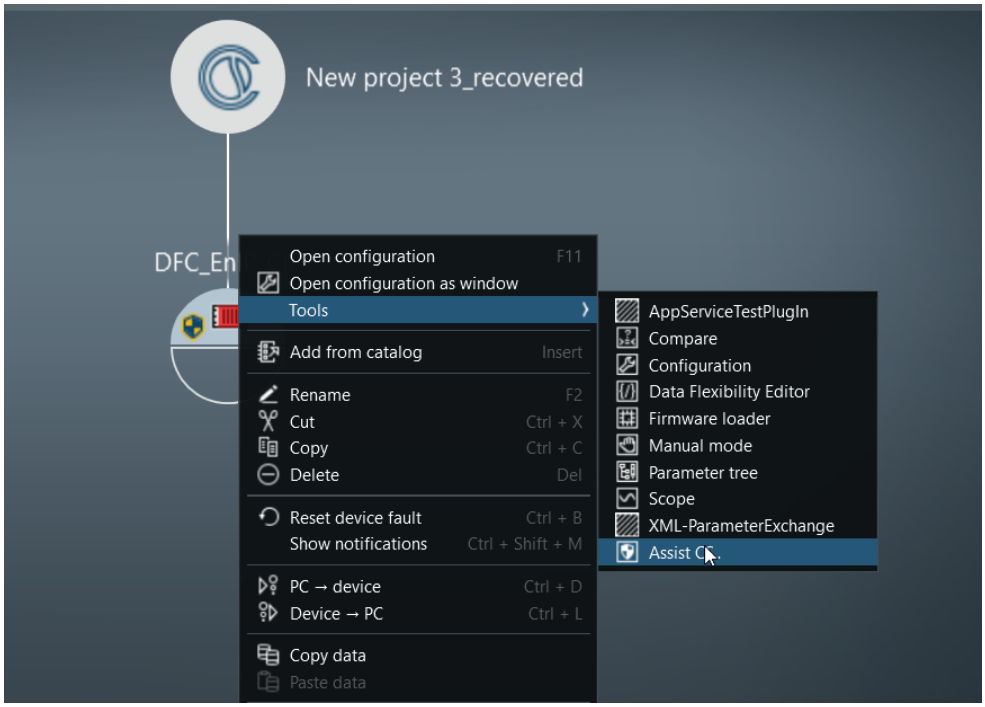

34912293259

3. Log in to the device. To do so, read out the ID of the safety key.



34912344587

4. Make sure you are connected with the correct device. To do this, check the LED flashing pattern of the corresponding device.
5. Enter the password and log in. When logging in for the first time, you must enter the password twice.

6. To enable CIP Safety™ communication, first go to "F-communication".

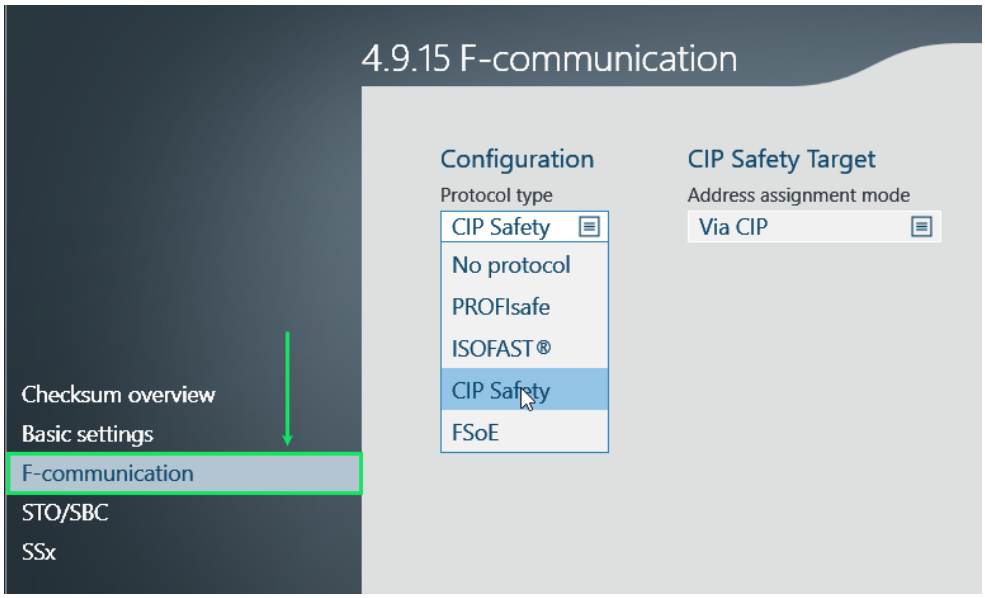

34912504843

7. Select the entry "CIP Safety" under "Protocol type". Then set the mode for address assignment to "Via CIP".

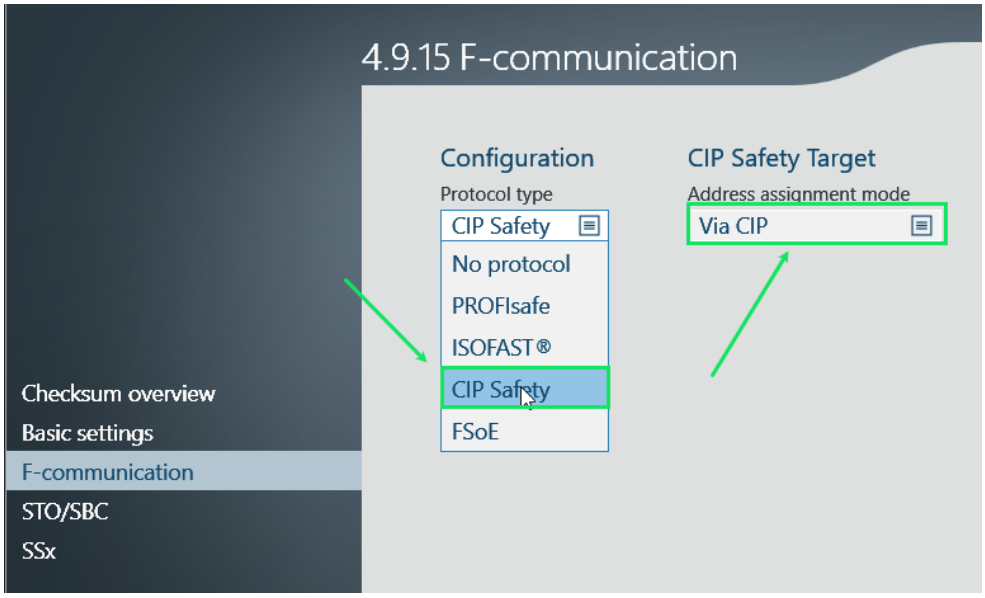

34912509067

8. After completing the complete configuration, download the parameters to the safety option. Perform a transfer when the configuration is complete.

RSLogix Studio 5000

Configuration options

The following example configurations are possible:

- Safety option CSB..A
  - Safety Input: 4 SINT

33955948/EN – 05/2026

  - Safety Output: 3 SINT
  - Exclusive Owner Input: 5 INT
  - Exclusive Owner Output: 5 INT

  If more inputs/outputs are required for the Exclusive Owner Connection, up to 16 INT can be used.
- CSL..A/CSS..A safety option in the "Technology" profile variant
  - Safety Input: 6 SINT
  - Safety Output: 5 SINT
  - Exclusive Owner Input: 5 INT
  - Exclusive Owner Output: 5 INT

  If more inputs/outputs are required for the Exclusive Owner Connection, up to 16 INT can be used.
- CSL..A /CSS..A safety option in the "System" profile variant
  - Safety Input: 12 SINT
  - Safety Output: 5 SINT
  - Exclusive Owner Input: 5 INT
  - Exclusive Owner Output: 5 INT

  If more inputs/outputs are required for the Exclusive Owner Connection, up to 16 INT can be used.

Configuration example

Perform the following steps to configure a safety device from SEW-EURODRIVE in RSLogix Studio 5000.

✓ Make sure you are using at least version 30 of the software.

✓ Configure and, if necessary, adjust the size of the safety inputs/outputs according to the safety option used and the communication profile (see section "Configuration options").

1. Start up the device as an EtherNet/IP™ station.

33955948/EN – 05/2026

2. Check and configure the module definition by clicking "Change".

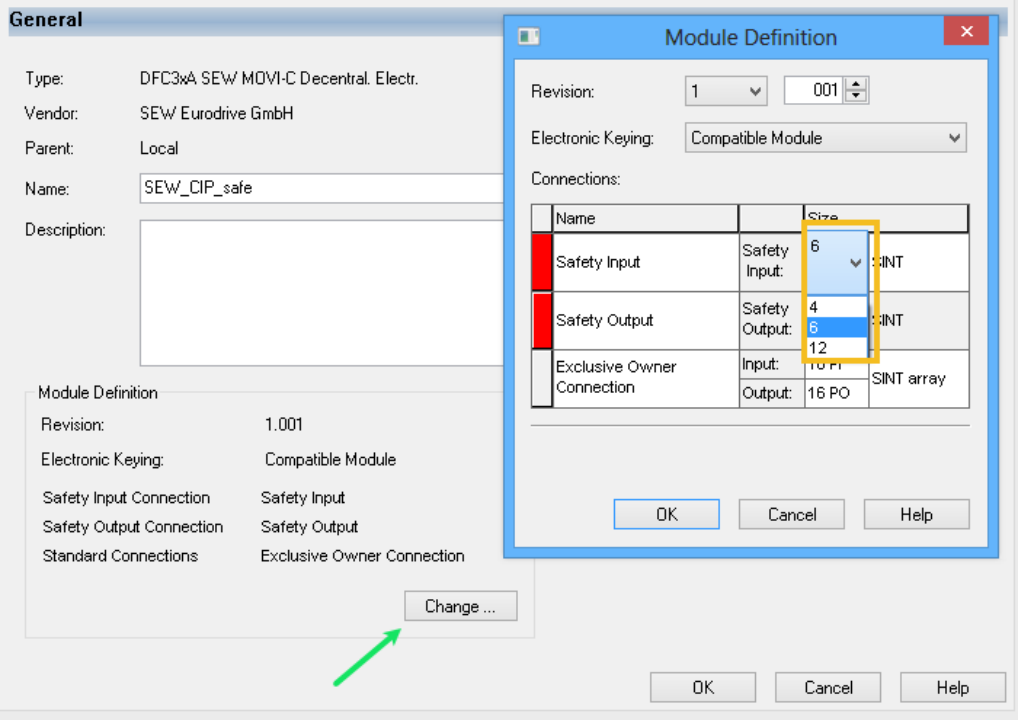

34916445707

3. Go to the option "Safety" and enter the required information.

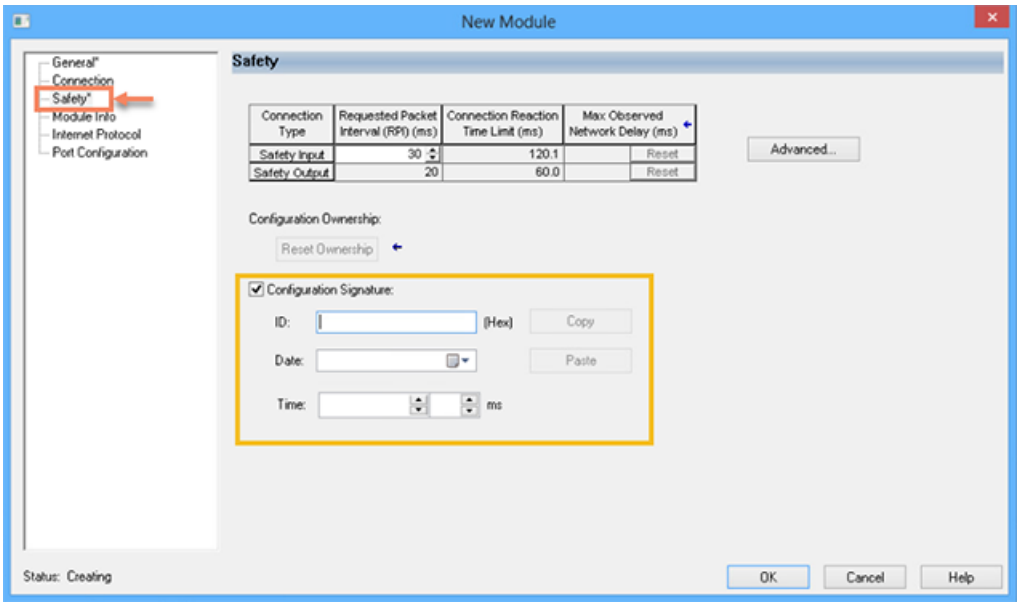

9007234171190155

4. You must enter the Requested Packet Interval (RPI) under "Connection Type". Select the value "30". This is the smallest interval (30 ms) for the CS..A safety options.

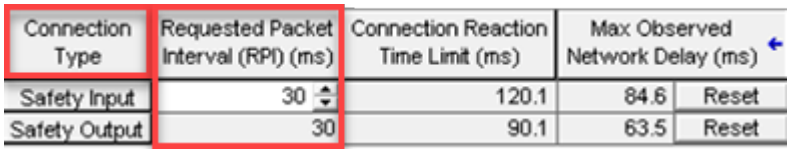

55184668811

33955948/EN – 05/2026

5. You must enter the following data under "Configuration Signature":

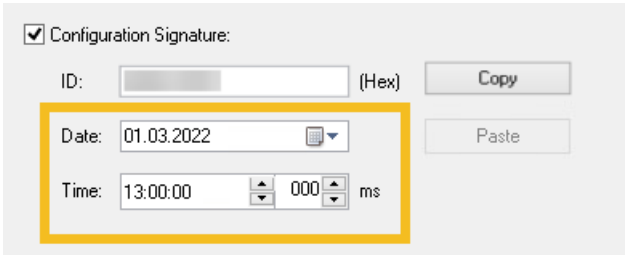

9007234171974283

- ID: Enter the value of the parameter *SCCRC Test Value* from MOVISUITE® here.
- Date: Select a specified date (reference: 01.03.2022).
- Time: Use the arrow keys to select a specified timestamp (reference: 13:00 UTC).
- Date: 01.03.2022, time: Depending on the respective time zone

  The system time of the computer on which the engineering tool of the originator is running is relevant.

The following UTC timestamps apply for CIP Safety:

UTC	Date	Time
-12	March 1, 2022	00:00:00
-11	March 1, 2022	01:00:00
-10	March 1, 2022	02:00:00
-9	March 1, 2022	03:00:00
-8	March 1, 2022	04:00:00
-7	March 1, 2022	05:00:00
-6	March 1, 2022	06:00:00
-5	March 1, 2022	07:00:00
-4	March 1, 2022	08:00:00
-3	March 1, 2022	09:00:00
-2	March 1, 2022	10:00:00
-1	March 1, 2022	11:00:00
0	March 1, 2022	12:00:00
+1	March 1, 2022	13:00:00
+2	March 1, 2022	14:00:00
+3	March 1, 2022	15:00:00
+4	March 1, 2022	16:00:00
+5	March 1, 2022	17:00:00
+6	March 1, 2022	18:00:00
+7	March 1, 2022	19:00:00
+8	March 1, 2022	20:00:00
+9	March 1, 2022	21:00:00
+10	March 1, 2022	22:00:00
+11	March 2, 2022	23:00:00

UTC	Date	Time
+12	March 2, 2022	00:00:00
+12:45	March 2, 2022	00:45:00
+13:00	March 2, 2022	01:00:00
+13:45	March 2, 2022	01:45:00
+14	March 2, 2022	02:00:00

6. Make sure that you are in the online mode of the RSLogix Studio 5000 engineering tool. Load the safety network number into the safety option via the [Set] button and check the connection.

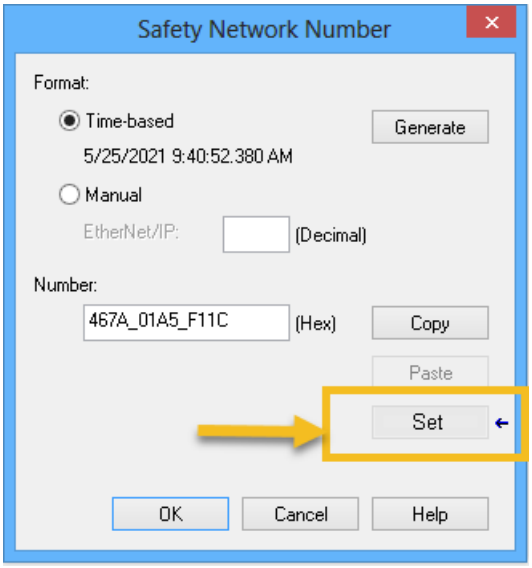

34928190475

7. Then check the connection.

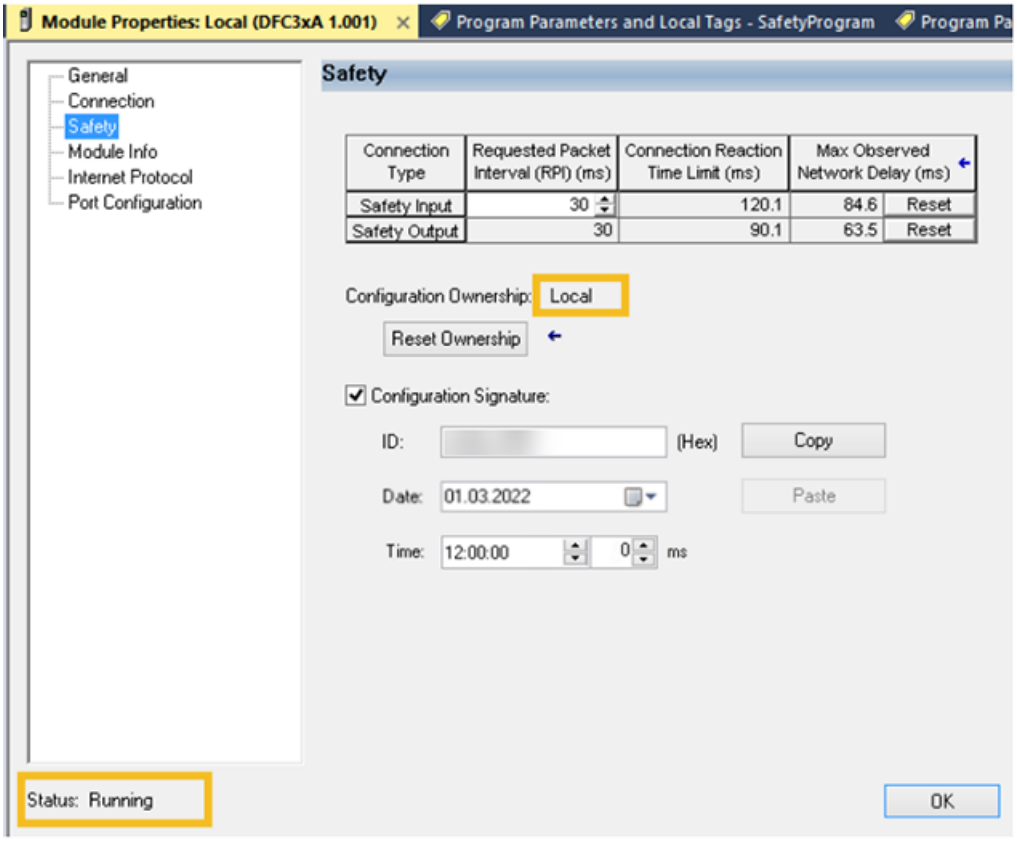

9007234182967435

Assigning a safety target via parameterization

This chapter describes the basic startup procedure for CIP™ Safety communication when the CIP™ Safety target is assigned by the scanner software via CIP™. Both parts – MOVISUITE® and RSLogix – are described.

MOVISUITE®

To configure the CIP Safety™ communication in MOVISUITE® using the integrated "Assist CS..." software tool, you must perform the following steps.

1. To enable CIP Safety™ communication, first go to "F-communication".

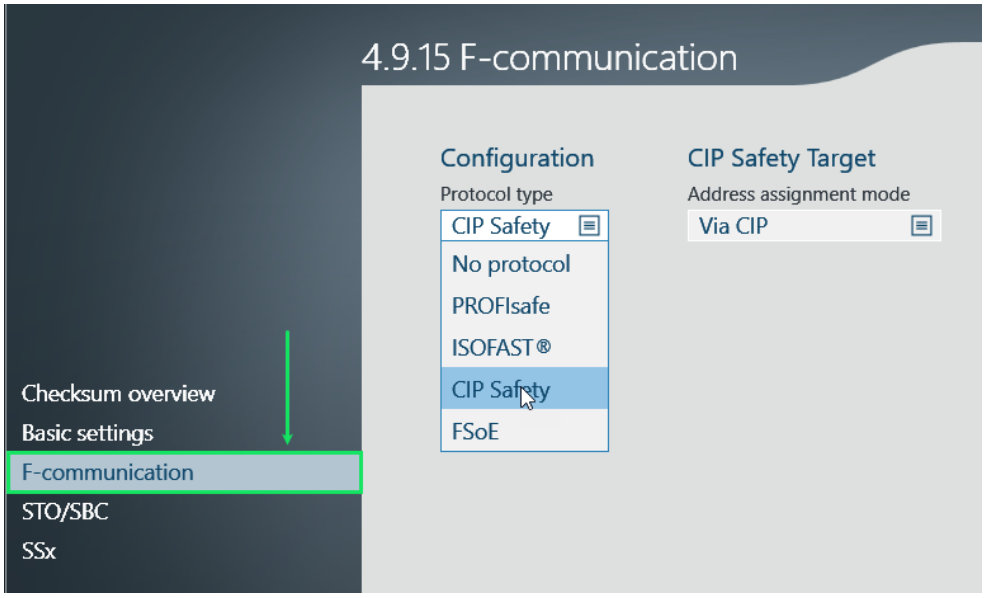

34912504843

2. Select the entry "CIP Safety" under "Protocol type".

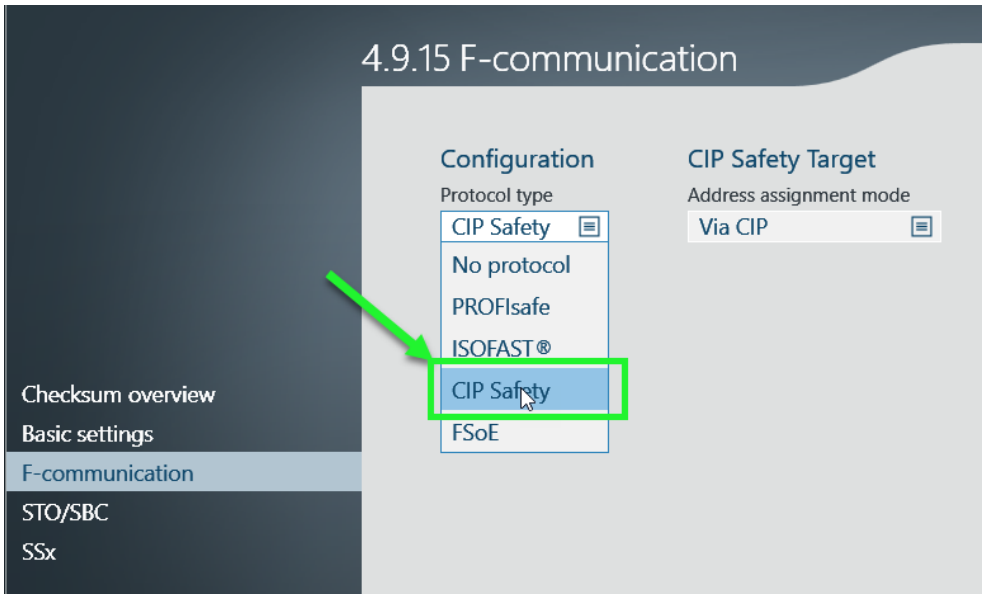

34928232587

33955948/EN – 05/2026

3. Then set the mode for address assignment ("Via parameterization").



34928235915

4. Enter the "Safety Network Number" that was generated in the RSLogix engineering tool.

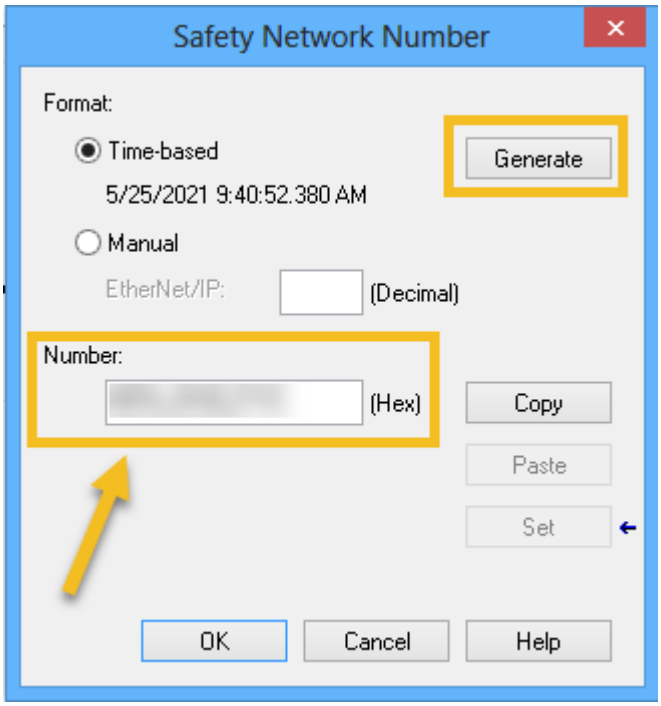

34928239627

5. After completing the complete configuration, download the parameters to the safety option. Perform a transfer when the configuration is complete.

Programming in RSLogix Studio 5000

This chapter explains how to exchange data within the RSLogix Studio 5000 programming environment

Display of the device in "Controller Tags"

The device is displayed in the "Controller Tags" section as follows.

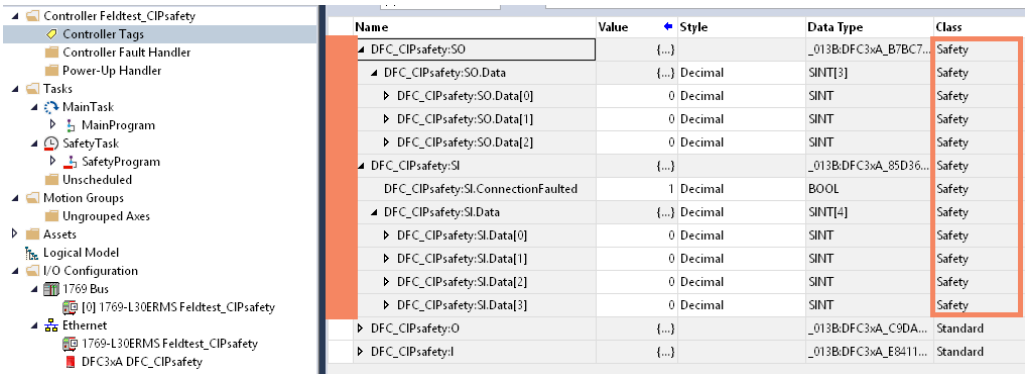

34928537355

Safety data and non-safety relevant data is displayed and marked accordingly (safety is highlighted here).

INFORMATION

The size of the process data interface with safety data corresponds to the number of bytes configured in the module configuration.

Data exchange in the program

To exchange data and information within the RSLogix program, user-defined data types and a mapping table must be configured and a small program must be written.

Creating user-defined data types

The data types to be created must correspond to the size of the safety process data interface. This may differ depending on the safety option. In this case, the CSB..A safety option is used.

- Structure of the user-defined data

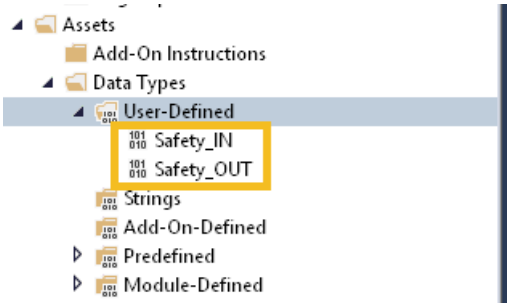

34928542731

33955948/EN – 05/2026

- Safety_IN (here: 4 bytes)

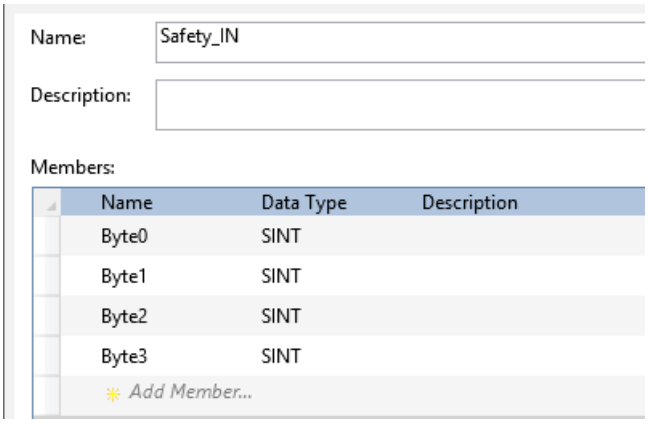

34928546059

- Safety_OUT (here: 3 bytes)

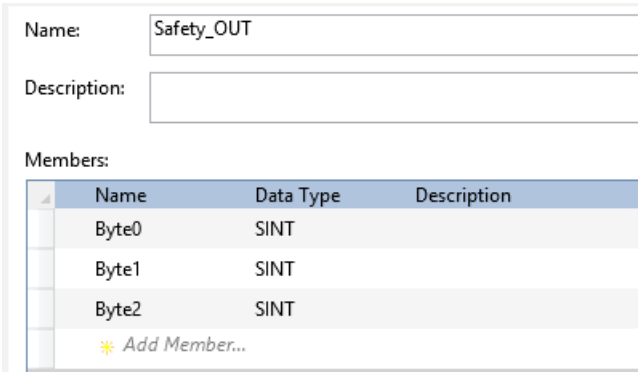

34928600587

The sizes of the IN and OUT structures must correspond to the real size of the interface.

INFORMATION

This is only a very brief example. It is also possible to split the interface into the individual bits of the interface.

Creating instances of user-defined data types

You must create instances to use the data types in the program. These must be marked as "Safety" or "Standard" depending on the use of the variables.

The variables/instances must be created in the "Controller Tags".

safeSafety_IN	Safety_IN	Safety
safeSafety_OUT	Safety_OUT	Safety
stdSafety_IN	Safety_IN	Standard
stfSafety_OUT	Safety_OUT	Standard

- Safety variables can only be changed in the safety program.
- Only standard variables can be used in the non-safe program.

Data exchange between safety program and non-safe program

A mapping table must be created to exchange data between both program parts.

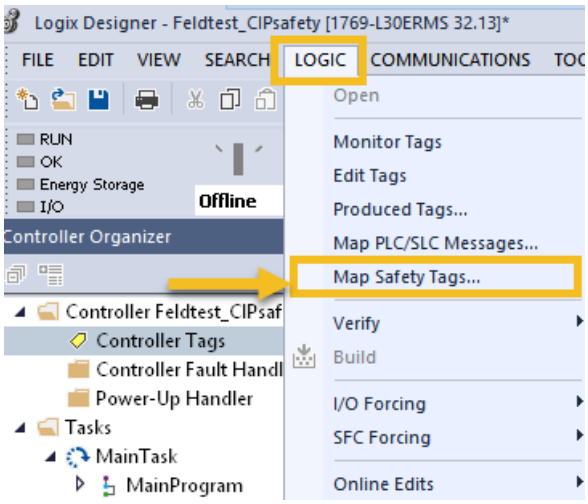

34928609291

Here, the previously defined standard and safety variables must be mapped to the corresponding variable.

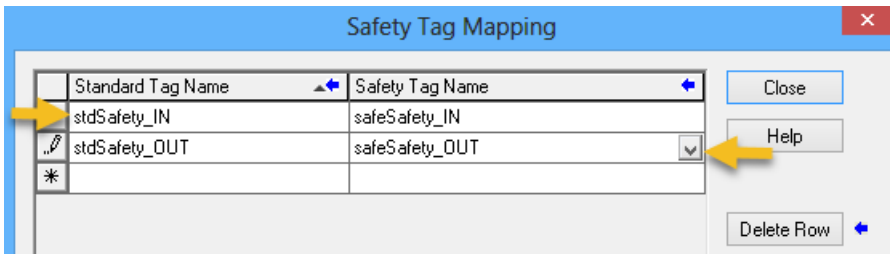

34929175819

Creating a safety program

The following routine is the minimum realizable program that must be written to transfer information from the safety interface to the program or to send information from the program to the safety interface.

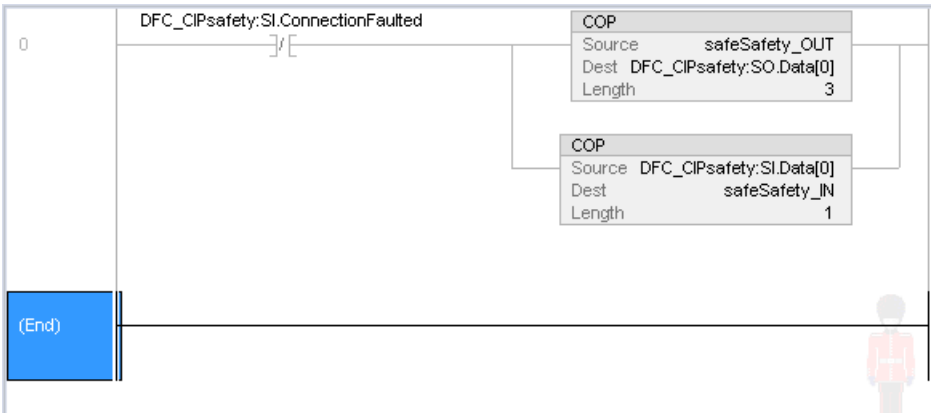

34929180171

33955948/EN – 05/2026

11.17.8 Safety-relevant acceptance



⚠ DANGER

Proper functioning of the safety subfunctions is not guaranteed without a safety-related acceptance.

Death or severe injuries

- Check each individual safety subfunction.
- An individual acceptance report may be created only when the system is in idle state.

To ensure that the safety subfunctions have been parameterized correctly, you must perform validation and documentation of the parameters once startup and parameterization have been completed. This is supported by the "Assist CS.." parameterization tool, which is integrated in MOVISUITE® in the form of an acceptance report. The acceptance report can only be created with valid parameterization. If the parameterization is invalid, the creation of the acceptance report is rejected.

The safety concept relies on the following basic assumptions. Parameters stored in the flash memory of the safety option cannot change the "Not accepted" bit by themselves. Online tests and appropriate signatures safeguard this during the course of basic measures on the assembly. However, the configuration cannot be evaluated by the assembly. This affects the parameterization of the safe inputs and outputs and the limit values of the safety subfunctions. Verification is performed by means of the acceptance report.

For safety subfunctions that are not used, it is sufficient to verify whether the enable is parameterized to "No".

A device that is not accepted will issue a warning after switching on and after a period of 8 hours (main error 46.50, subcomponent error 66.85) indicating that the device has not been accepted. There is no response by the device. The warning can be acknowledged and reappears again after 8 hours.

The "Not accepted" bit is set in the safe process data.

Sequence

After a successful startup, you must confirm that the data of the acceptance report matches the parameters on the safety option and the requirements. You must prove and protocol the values parameterized for the user units, sensors, and monitoring functions individually. This can be carried out with the aid of function tests. All limit values of the safety option must be verified by exceeding each limit value and then triggering the defined state (safe state = STO + brake de-energized). You must take this into account in the machine or system control system.

Performing a simple acceptance

✓ The unit used is an SI unit (e.g. m, mm)

1. Generate the acceptance report. Enter the value of the *ParCRCBus* parameter in the engineering tool of the F-host.
2. Check the limit values in the report for input or transmission errors.
3. Check the correct calculation of position values. This is also required if only speed and acceleration functions are used.
4. Check the correct calculation of speed and acceleration values.

33955948/EN – 05/2026

5. Check the wiring of inputs and outputs.
6. Select all parameterized safety subfunctions once via the digital inputs and/or via the safety bus. Use the status of the CS..A to check whether the corresponding safety subfunction is selected. In addition, check the LED and the 7-segment display on the inverter for the STO function, as well as the application of the brake.

INFORMATION

In the case of MOVISAFE® CS..A, a fault injection test is not required for acceptance of the safety options. This means that it is not necessary to explicitly test whether, for example, an SLS function triggers when the parameterized limit value is exceeded.

Procedure for acceptance of speed and acceleration

1. Calculations for speed and acceleration are printed on the acceptance report in chapter "Creating an acceptance report".
2. If both values have been calculated correctly, the following is accepted:
   - User unit speed

     4.1. Speed across a distance

     With speed v the distance s is covered in 1 second.

Line	Property	Value	Unit
260	s = v * 1sec	1000	mm
261	v	1000	mm/s

   - User unit acceleration

     4.2. Acceleration across a distance

     From standstill, the distance s is covered in 1 second with acceleration a.

Line	Property	Value	Unit
262	s = (a / 2) * 1sec * 1sec	5000	mm
263	a	10000	mm/s²

INFORMATION

The calculations from the acceptance report are used to verify internal normalizations and are not related to real values. The procedure can only be used with SI units.

Creating an acceptance report

With the Assist CS.. tool integrated in MOVISUITE®, you can generate an individual acceptance report and save it as a PDF. Before creating the report, enter the system-specific data in the Assist CS.. form. The system-specific data is transferred to the PDF file.

Structure of the acceptance report

The acceptance report that is generated as a PDF file contains the following information:

- System information
- Parameters of the safety option
- Overview of checksums
- Communication data

33955948/EN – 05/2026

Publishing acceptance

The acceptance of the safety option can be published after completion of the safety check. To publish the data set, enter the checksum of the report in Assist CS.. (line 7 in the following figure).

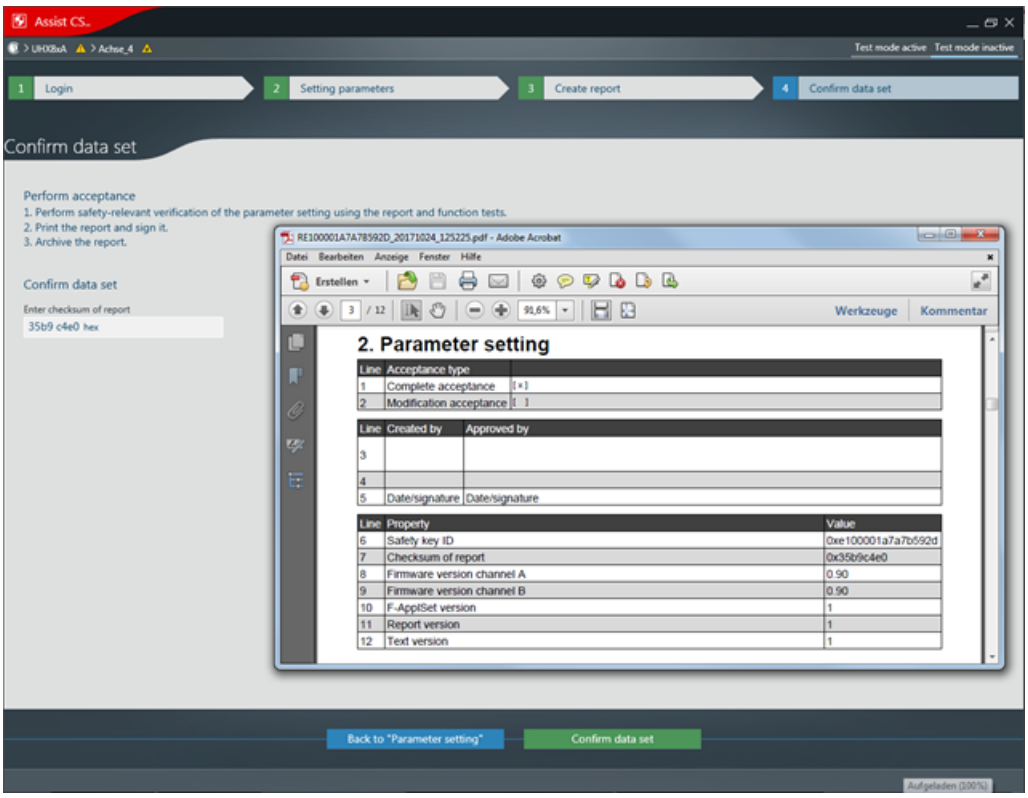

21877787147

This information is not safety-related and does not contain any information about the acceptance of the system in combination with external sensors and actuators.

11.17.9 Restoring the delivery state

⚠ WARNING

Unexpected and unwanted movement of the drive after having restored the delivery state of the safety option.

Severe or fatal injuries.

- Make sure that organizational measures are taken for the protection of personnel and machinery.

Requirements

Before restoring the delivery state, ensure that the system is in idle state and no dangerous movements can be performed.

You have the password for logging in to the "Assist CS.." parameterization tool. The password is not reset when you reset the device to the delivery state.

No safety subfunction is enabled in the delivery state of the safety option. The safety option permanently activates STO.

The parameterization of safe communication is not reset automatically. To do so, set the protocol to "No protocol" in the "Assist CS.." parameterization tool.

The connection (pairing) between a safety encoder with MOVILINK® DDI and a safety option is disconnected. After switching on again, the pairing process is carried out automatically.

Procedure

1. In MOVISUITE®, select "MOVISAFE® CS.. diagnostics" in the "Diagnostics" menu. Select the menu item "General". Click the [Restore delivery state] button.
2. Open the "Assist CS.." parameterization tool and log in.
3. Transfer the data to the device. In the context menu of the axis, select the menu item "Device → PC" to update the data in MOVISUITE®. After this, the data set is valid and behaves like after delivery. "Accepted" is not set.

INFORMATION

The parameters of the F-communication are not reset.

11.17.10 Resetting the password

Proceed as follows:

1. You can find the option-specific master password in plain text on the small system nameplate behind the front flap of the device.
2. Open the "Assist CS.." parameterization tool. To open the main menu, click the red "Assist CS.." tile in the top left.
3. Select the menu item "Manage password". In the "Old password" edit box, enter the master password.

   That the user must ensure that access to the master password of the security option complies with the same authorization guidelines as the password of the system itself.
4. In the edit boxes "New password" and "Enter new password again", enter the new password and confirm your entries.

   You can now parameterize the safety option in the "Assist CS.." parameterization tool.

11.17.11 Changing the password

1. Open the "Assist CS.." parameterization tool. To open the main menu, click the red "Assist CS.." tile in the top left.
2. Select the menu item "Manage password". In the "Old password" edit box, enter the previous password.
3. In the edit boxes "New password" and "Enter new password again", enter the new password and confirm your entries.

33955948/EN – 05/2026

12 Operation

12.1 Manual mode with the CBG01A, CBG11A and CBG21A keypads

To start the manual mode, select the corresponding "Manual mode" icon and start it.

For more information, refer to the respective manuals.

12.2 Manual mode with the CBG22A local keypad

With the CBG22A local keypad, you can intuitively operate the drive unit or device and read out faults using the symbols and functions on the color display.

For more information, refer to the associated manual.

12.3 Operation - Functional safety

12.3.1 Hazard caused by coasting of the drive

⚠ WARNING



Hazard caused by coasting of the drive. Without a mechanical brake or if the brake is faulty, a danger exists of the drive coasting to a halt.

Severe or fatal injuries.

- If the coasting of the drive causes any application-specific dangers, you must provide for additional preventive measures (e.g. guard with guard locking device). The additional preventive measures must cover the danger zone until no further danger to personnel exists. As an alternative, you must equip the drive with a safety brake.
- The additional protective covers must be designed and integrated so that they meet the requirements determined in the risk assessment for the machine.
- After activating the stop command, access to the machine must remain blocked until the drive has reached standstill depending on the hazard involved. As an alternative, you must determine the access or intervention time and then calculate and observe the resulting safety clearance.

12.3.2 Start inhibit

The start inhibit activates the STO function and prevents the automatic startup of the safety option.

The safe digital output F-DO00 behaves as follows depending on the settings of the *Function selection (8709.1)* parameter:

STO or SBC

- The safe digital output F-DO00 is set to the safe state.

None

- The safe digital output F-DO00 is not set to the safe state and can be controlled by the higher-level safety controller.

SBC + F-PA

- The safe digital output F-DO00 is set to the safe state.

33955948/EN – 05/2026

The start inhibit is activated in the following cases:

- Switching on the device with integrated safety option (parameterizable)
- End of a muting function
- Parameterization with pending input, output or encoder fault
- Parameterization with active errors in the EDM safety subfunction
- Restoration of the parameter set, e.g. after device replacement
- Restoration of the delivery state

The start inhibit can be deactivated as follows:

- Through a fault acknowledgment with a safe digital input F-DI or via the *Fault acknowledgment* bit on the safe process data
- For all causes (except for the start inhibit after powering on the device) by switching the device off and on again

Using the *Fault status after startup* parameter (8703.240), you can set whether the start inhibit is activated after the device is powered on.

12.3.3 Operating states of the MOVISAFE® CS..A safety option

The MOVISAFE® CS..A safety option distinguishes between the following operating states:

- Operation
- Parameterization
- Safe state after critical fault

"Operation" operating state

In the "Operation" operating state, the selected safety subfunctions are executed according to the parameterization. For further information, refer to chapter "Parameterizing the safety subfunctions" (→ 🗎 426). The safety subfunctions are selected either via the safe digital inputs or the F-process data. The external, safe digital outputs can be controlled directly via the F-process data if no function has been assigned to the safe digital outputs in the function assignment.

Operating state "Parameterization"

In the "Parameterization" operating state, the MOVISAFE® CS..A safety option is in a safe state. The MOVISAFE® CS..A can be parameterized in this state. If a fault occurs during the parameterization, e.g. a violation of a plausibility rule, the MOVISAFE® CS..A remains in the "Parameterization" operating state.

"Safe state" operating state after critical error

No F-process data communication occurs in the "Safe state" operating state. All safe digital inputs and outputs are disconnected. The "Safe state" operating state can be resolved only by deactivation and reactivation.

33955948/EN – 05/2026

12.4 IT security

12.4.1 Hardening measures



Perform the following hardening measures:

- Regularly check if updates are available for your products.
- Report incidents regarding cybersecurity by e-mail to cert@sew-eurodrive.com or via the contact form on the Product Security Management website (http://go.sew/psm).
- Regularly check which security advisories are available in the Online Support of SEW-EURODRIVE.
- Evaluate the fault memories and diagnostics information of your products regularly and check whether there are entries that affect IT security.

12.4.2 Guidelines for secure operation



The engineering protocol from SEW-EURODRIVE allows authorized personnel to activate various service accesses on the device. Authentication is implemented by using static access data. This data is not used to defend against attacks on IT security but to protect against unintentional modification. This is the reason why it cannot be changed.

To prevent misuse of these service accesses, network access must be restricted according to the state of the art. For more information, refer to section "IT security of the environment" (→ 🗎 12).

12.4.3 Guidelines for user account management



Devices with firmware versions prior to V20.00 do not have user accounts.

As of firmware version V20.00, the device has user account management. For further information, refer to the following documentation: Manual "Cybersecurity for inverters of the MOVI-C® modular automation system – Applies to firmware versions as of V20.00".

33955948/EN – 05/2026

13 Service

13.1 Evaluating fault messages

13.1.1 MOVISUITE®

The following section shows a sample evaluation of an error message in MOVISUITE®:

1. Open the parameter tree in MOVISUITE®.
2. In the parameter tree, select the "Status" node [7].
   - ⇨ The **current error messages** can be found in the "Fault status" group [5].
   - ⇨ **Additional information** on the causes for the "Not ready" status can be found in the "Device status" group [6].
   - ⇨ Information on the **history of the error messages** can be found in the "Fault memory" node [4].

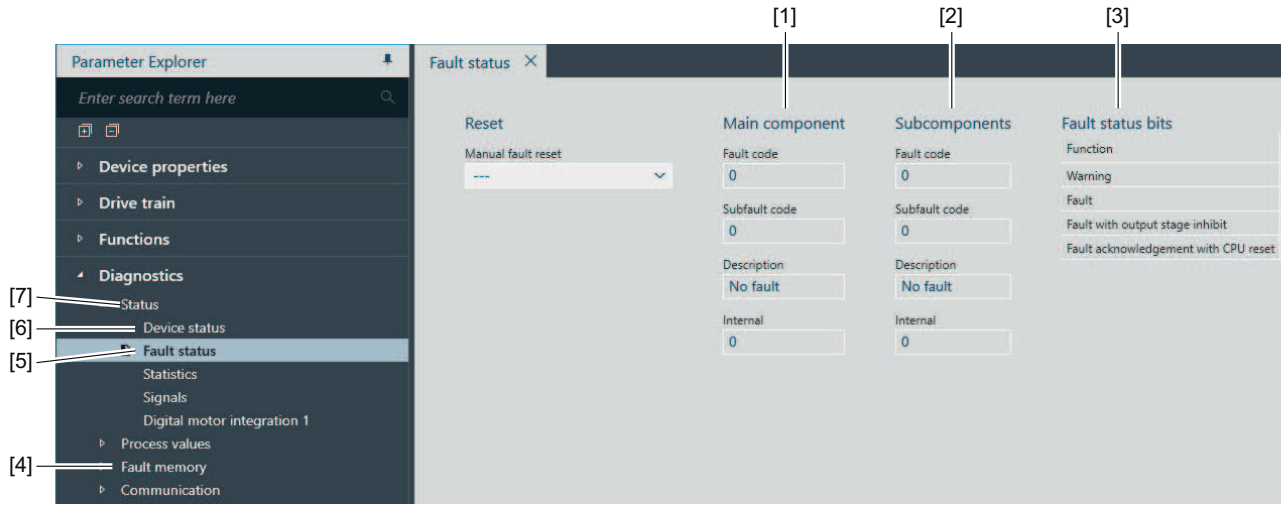

36028818994022283

[1] Fault status of the main component
[2] Fault status of the subcomponent
[3] Display of the status bits
[4] Fault memory
[5] Fault status
[6] Device status
[7] Status

13.2 Resetting fault messages



⚠ WARNING

Removing the source of the malfunction or performing a reset can result in an automatic restart of the connected drives.

Severe or fatal injuries.

- Prevent the system from performing an unintentional startup.

33955948/EN – 05/2026

Acknowledge the fault message by:

- Switching the device off and on again.
- Send "Reset command" via the controller or PLC.

13.3 Error responses

The following table describes the following fault responses:

Error response	Description
No response	The inverter ignores the event
Warning with self reset	The inverter issues a warning message with self-reset. The error is automatically reset after the cause of error is eliminated.
Warning	The inverter issues a warning message.
Application stop (with output stage inhibit)	The inverter stops with the deceleration set for the application limit. Parameter set 1 Index 8375.0-13 Parameter set 2 Index 8375.8-13 If n = 0: Brake "applied" and output stage "off".
Application stop (with output stage inhibit) with self-reset	
Emergency stop (with output stage inhibit)	The inverter stops with the set emergency stop deceleration. Parameter set 1 Index 8375.0-20 Parameter set 2 Index 8375.8-20
Emergency stop (with output stage inhibit) with self-reset	
Inhibit output stage with self-reset	The output stage is deactivated and the brake is applied.
Inhibit output stage	

Self-reset means: Eliminating the cause of the error results in acknowledgment of the fault. The inverter automatically resumes the operation before the error occurred. The drive can restart automatically.

13.4 Error messages with parameterizable response

Parameterizable errors	Description	Index no.	Possible error response
Manual mode – timeout response	This parameter is used to set the response to a bus timeout during manual mode.	8504.3	• Application stop (with output stage inhibit) • Emergency stop (with output stage inhibit) • Inhibit output stage
Heat sink overtemperature – prewarning	Here you can set the device response when the prewarning threshold for heat sink utilization is exceeded (index 8336.1).	8622.2	• No response • Warning

33955948/EN – 05/2026

Parameterizable errors	Description	Index no.	Possible error response
Positioning lag error	Here you can set the device response to a lag error (lag error window exceeded, index 8509.4).	8622.3	• No response • Warning • Application stop (with output stage inhibit) • Emergency stop (with output stage inhibit) • Inhibit output stage.
Line phase failure	Here you can set the device response to a line phase failure (values below threshold defined by the user, index 8351.5).	8622.4	• No response • Warning • Application stop (with output stage inhibit) • Emergency stop (with output stage inhibit) • Inhibit output stage.
External fault	Here you can set the device response to an external fault (e.g. triggered by terminal or control word).	8622.5	• No response • Warning • Application stop (with output stage inhibit) • Emergency stop (with output stage inhibit) • Inhibit output stage.
Fieldbus – timeout	Here you can set the device response to a bus timeout on the EtherCAT®/SBus^{PLUS} (timeout period, index 8455.3).	8622.6	• Warning • Application stop (with output stage inhibit) • Emergency stop (with output stage inhibit) • Inhibit output stage. • Warning with self-reset • Application stop (with output stage inhibit) with self-reset • Emergency stop (with output stage inhibit) with self-reset • Inhibit output stage with self-reset

33955948/EN – 05/2026

Parameterizable errors	Description	Index no.	Possible error response
External synchronization	Here you can set the device response to loss of external synchronization.	8622.7	• No response • Warning • Application stop (with output stage inhibit) • Emergency stop (with output stage inhibit) • Inhibit output stage. • Warning with self-reset • Application stop (with output stage inhibit) with self-reset • Emergency stop (with output stage inhibit) with self-reset • Inhibit output stage with self-reset
Motor temperature prewarning	Motor temperature current parameter set – prewarning.	8442.5	• No response • Warning • Application stop (with output stage inhibit) • Emergency stop (with output stage inhibit) • Inhibit output stage.
Electromechanical capacity utilization – prewarning	Here you can set the device response to an exceeded prewarning threshold for electromechanical capacity utilization (index 8336.2).	8622.10	• No response • Warning • Application stop (with output stage inhibit) • Emergency stop (with output stage inhibit) • Inhibit output stage.
HW limit switches – current parameter set		8622.11	• No response • Emergency stop (with output stage inhibit) • Emergency stop (with output stage inhibit) with self-reset
SW limit switches – current parameter set		8622.12	• No response • Emergency stop (with output stage inhibit) • Emergency stop (with output stage inhibit) with self-reset

33955948/EN – 05/2026

Parameterizable errors	Description	Index no.	Possible error response
Encoder – warning	Here you can set the device response to an encoder warning.	8622.13	• Warning • Application stop (with output stage inhibit) • Emergency stop (with output stage inhibit) • Inhibit output stage.
Encoder – fault	Here you can set the device response to an encoder fault.	8622.14	• Application stop (with output stage inhibit) • Emergency stop (with output stage inhibit) • Inhibit output stage
Additional encoder	Here you can set the device response to a fault of an encoder that is not used for control purposes (speed or positioning control).	8622.15	• Warning • Application stop (with output stage inhibit) • Emergency stop (with output stage inhibit) • Inhibit output stage.
Encoder 1 – latest error		8622.16	• No response
Encoder 2 – latest error		8622.17	• No response
Encoder 1 – latest critical fault		8622.18	• No response • Inhibit output stage.
Encoder 2 – latest critical fault		8622.19	• No response • Inhibit output stage.
Application heartbeat timeout	Here you can set the device response to a timeout of the application heartbeat.	8622.21	• Warning • Application stop (with output stage inhibit) • Emergency stop (with output stage inhibit) • Inhibit output stage.
Undershooting of 4 mA limit at analog input	Here you can set the device response to undershooting the 4 mA limit at the analog input.	8622.25	• Application stop (with output stage inhibit) • Emergency stop (with output stage inhibit) • Inhibit output stage. • Warning with self reset

13.5 Responses to error acknowledgement

13.5.1 Error acknowledgement

When acknowledging an error, the error end state determines which reset type (system restart or warm start) is executed.

33955948/EN – 05/2026

13.6 Status and operating displays of the 7-segment display

13.6.1 Description

INFORMATION

The 7-segment display is only available when the CDM11A diagnostic module is used.

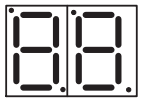

- The two 7-segment displays indicate the operating state of the inverter.

13.6.2 Operating displays of the 7-segment display

Display	Description	State	Remark/action
b0	Device passes through several states when loading the firmware (boot) in order to become ready for operation.	• Status: Not ready • Output stage is inhibited. • Communication is not possible.	• Wait until the boot procedure is complete. • Device stays in this state: Device defective
b1			
b2			
b3			
br			
.	Energy-saving mode	–	Energy-saving mode active
00	DC link voltage missing.	• Status: Not ready • Output stage is inhibited. • Communication is possible.	Check the supply system.
C0 flashing	Module bus is not ready.	–	Check the module bus connection.
C1 flashing	Startup state	–	Startup state is active.
C2 flashing	STO active	• Status: Not ready • Output stage is inhibited. • Communication is possible.	The Safe Torque Off function is active.
C3 flashing	Synchronization with the bus is not OK. Process data processing is not ready.		• Check the bus connection. • Check the synchronization setting at the device and controller. • Check the process data settings at the device and controller.
C4 flashing	Encoder evaluation is not ready.		• Encoders are being initialized. • Device stays in this state: - No encoder selected. - "Source actual speed" or "Actual position" parameter shows an encoder that does not exist.
C5 flashing	Motor management is not ready.	–	–

33955948/EN – 05/2026

Display	Description	State	Remark/action
C6 flashing	Internal device supply is incomplete.	–	–
C7 flashing	The power section is not ready.	–	–
C8 flashing	External device is not ready.	–	–
C9 flashing	Data flexibilization layer is not ready.	–	–
Cd flashing	Parameter download is running.	–	–
CA	MOVILINK® DDI is not ready.	–	Determination of the cause via the MOVISUITE® engineering software under status or digital motor integration.
bo	Start of the firmware download	• Status: Not ready • Output stage is inhibited.	The device passes through various states during a firmware update.
u	Waiting for update		
u.	Deleting firmware		
u[1)]	Data is being transmitted.		
br	Conclusion of the firmware download and reboot		
d0 flashing	Basic initialization	• Status: Not ready • Output stage is inhibited. • Communication is possible.	Waiting for initialization to finish.
d1 flashing	Initialization at delivery state		
01	Output stage inhibit	Output stage is inhibited.	The drive is not controlled by the output stage. The brake is applied; without the brake, the motor coasts to a halt. FCB 01 can be selected from various sources.
AC	Auto Configuration	Data is transferred to the inverter via the MOVILINK® DDI interface.	Motor is started up via the MOVILINK® DDI interface.

33955948/EN – 05/2026

Display	Description	State	Remark/action
02	Default stop	For further information, refer to the description of the FCBs.	Drive function (FCB) "Default stop" active if no other FCB is selected and the system is ready.
04	Manual mode		Manual mode active
05	Speed control		Speed control with internal ramp generator
06	Interpolated speed control		Speed control with setpoints cyclically via bus. The ramp generator is located externally; for example, in a higher-level controller.
07	Torque control		Torque control
08	Interpolated torque control		Torque control with setpoints cyclically via bus
09	Position control		Positioning mode with internal ramp generator
10	Interpolated position control		Positioning mode with setpoints cyclically via bus. The ramp generator is located externally; for example, in a higher-level controller.
12	Reference travel		The drive performs a reference travel.
13	Stop at application limits		Deceleration at the application limit. FCB 13 is also active if no FCB is selected other than the default FCB 02.
14	Emergency stop	For further information, refer to the description of the FCBs.	Deceleration at the emergency stop limit
18	Rotor position identification		Encoder commutation for synchronous motors
19	Position hold control		Position control on current position
20	Jog		Jog mode active
21	Brake test		Brake is tested by applying a torque while the brake is closed.
25	Motor parameter measurement		Motor parameter measurement active
26	Stop at user limits		Serves to stop at user limits.

1) Outer segment parts are switched off and on in clockwise order.

13.6.3 Error displays of the 7-segment display (CDM11A required)

The inverter detects any errors that occur and displays them as an error code. Each error is clearly defined by its error code and the associated attributes:

- Error response
- The final status after executing the error response
- Type of reset response

33955948/EN – 05/2026

The error codes are displayed as flashing numerical values in the inverter display. The error code appears in the following display sequence:

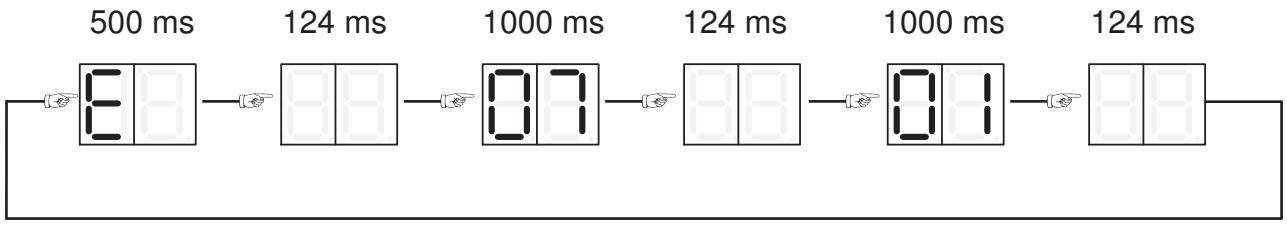

9007211336799115

In the example shown, a two-digit error code with suberror is displayed (error 07.01).

13.7 Status and operating displays of the LEDs

You will find the positions of the LEDs in the **Product manual** > chapter "Device structure" (→ 🗎 276).

13.7.1 Overview of the LEDs

The device label depends on the device variant or function. Consequently, not all LEDs are labeled for all device variants. The following labeling shows the maximum expansion of the respective variant.

PROFINET IO, EtherNet/IP™, Modbus TCP	SBus^{PLUS}/ EtherCAT®	POWERLINK	Binary control
DRIVE	DRIVE	DRIVE	DRIVE
US1/MS	RUN	BE	–
BF/NS	ERR	BS	–
L/A X40	L/A IN	L/A X40	–
L/A X41	L/A OUT	L/A X41	–
F-RUN	F-RUN	F-RUN	–
F-ERR	F-ERR	F-ERR	–

13.7.2 General LEDs

"F-ERR" LED

INFORMATION

The "flashing sequence" state means that both LEDs of the assembly alternately flash in yellow or green. The LED color is alternately assigned to the LEDs, e.g. the "F-RUN" LED flashes green, the "F-ERR" LED flashes yellow, and vice versa.

The following table describes the display functions of the "F-ERR" LED:

Status	Meaning
Flashing sequence	Device identification for safety key ID query

33955948/EN – 05/2026

Status	Meaning
Red **Illuminated**	Critical error, cannot be acknowledged
Red **Flashing (0.5 Hz)**	• Error can be acknowledged • Error outside the device, cabling system error, internal memory data error • Response to limit value violation active
Yellow **Flashing (2 Hz)**	• Error suppression (muting) active • Emergency mode active
Yellow **Illuminated**	Warning: Error connection basic device
Green **Flashing (0.5 Hz)**	Error in the "Parameterization" operating state: • Error in parameterization • No parameterization exists • Current parameter set not consistent with the safety key • Inconsistent parameterization
Green **Illuminated**	Fault-free operation
Off	Device off

"F-RUN" LED

INFORMATION

The "flashing sequence" state means that both LEDs of the assembly alternately flash in yellow or green. The LED color is alternately assigned to the LEDs, e.g. the "F-RUN" LED flashes green, the "F-ERR" LED flashes yellow, and vice versa.

The following table describes the display functions of the "F-RUN" LED:

Status	Meaning
Flashing sequence	Device identification for safety key ID query
Red **Flashing (0.5 Hz)**	Device identification for parameterization
Red **Flashing (2 Hz)**	Firmware update, do not switch the device off
Red **Illuminated**	Critical error (cannot be acknowledged)
Yellow **Illuminated**	STO safety subfunction is active
Yellow **Flashing (0.5 Hz)**	Device in operating state with one or more of the following constraints: • The assembly controls inverters • Test mode • Referencing active

33955948/EN – 05/2026

Status	Meaning
Green **Flashing (0.5 Hz)**	Acceptance of the assembly has not yet taken place
Green **Flashing (2 Hz)**	• Device booting up or initializing • Device in parameterization state
Green **Illuminated**	Device in operating state and parameter set approved
Off	Device off

"DRIVE" LED

The following frequencies always refer to a certain period duration, i.e. a phase-in and phase-out of the LED and not to the entire pattern. For states in which the LED lights up in multiple colors, the following pattern is used:

Color 1 → off → color 1 → off → color 2 → off → color 2 → off = 4 periods

LED	Operating state	Meaning	Measure
Off	Not ready for operation	The supply and/or backup voltage is not connected.	Enable voltage
Yellow **Flashing, 4 Hz**	Not ready for operation	Initialization phase/system startup	Wait until the procedure is complete.
Yellow **Pulse** **250 ms on, 5 s off**	Not ready for operation	The inverter is in standby mode.	Exit standby mode.
Red **Flashing, 1 Hz**	Not ready for operation	An error has occurred, the cause of which can be eliminated by the user.	Refer to chapter "Basic device fault description" for possible measures.
Red **Steady light**	Not ready for operation	An error has occurred, the cause of which cannot be eliminated by the user.	Refer to chapter "Basic device fault description" for how to proceed further.
Yellow/red **Flashing with changing colors, 0.5 Hz** (2 × yellow, 2 × red)	Ready	A warning is present. The output stage is inhibited.	Refer to chapter "Basic device fault description" for possible measures.
Green/red **Flashing with changing colors, 0.5 Hz** (2 × green, 2 × red)	Ready	A warning is present. The output stage is enabled.	Refer to chapter "Basic device fault description" for possible measures.
Green/yellow **Flashing with changing colors, 4 Hz** (2 × green, 2 × yellow)	Not ready for operation	Automatic startup is being performed via the MOVILINK® DDI interface.	Wait until startup is complete.

33955948/EN – 05/2026

LED	Operating state	Meaning	Measure
Green/yellow **Flashing with changing colors, 0.5 Hz** (2 × green, 2 × yellow)	Ready Device inhibited	STO is active.	Deactivate STO.
Yellow **Flashing, 0.5 Hz**	Not ready for operation	The system is not ready for operation.	Check the cause why "not ready" was issued using the MOVISUITE® engineering software, via the keypad or the controller.
Yellow **Flashing, 1 Hz**	Ready State of manual mode/local mode/ prioritized terminal control	The device is ready for operation, waiting for enable.	–
Green **Flashing, 1 Hz**	Device enabled State of manual mode/local mode/ prioritized terminal control	The output stage is enabled.	–
Yellow **Flashing, 2 Hz**	Ready	The brake is released without drive enable.	–
Yellow **Steady light**	Ready Device inhibited	The device is ready for operation, the output stage is inhibited.	–
Green **Flashing, 4 Hz**	Device enabled Current limit active	The drive is at the current limit.	Reduce the load.
Green **Steady light**	Device enabled	The output stage is enabled.	–

"RUN" LED

Status	Meaning
Off	"INIT" state The interface is in the "INIT" state.
Green **Flashing**	"PRE_OPERATIONAL" state Mailbox communication is possible. Process data communication is not possible.
Green **Flashing (1 Hz)**	"SAFE_OPERATIONAL" state Mailbox and process data communication is possible. Safety-related output signals are not output.
Green **Illuminated**	"OPERATIONAL Mode" state Mailbox and process data communication is possible.

33955948/EN – 05/2026

"ERR" LED

Status	Meaning
Off	No error The interface is in operating state.
Red **Flickering**	Boot error A BOOT error has occurred. "INIT" state has been reached. However the "Change" parameter is set to "0x01:change/error".
Red **Flashing**	Invalid configuration A general configuration error has occurred.
Red **Flashing once**	Unrequested state change The slave application has changed the state automatically. The "Change" parameter is set to "0x01:change/error".
Red **Flashing twice**	Application watchdog timeout A watchdog timeout error has occurred in the application.
Red **Illuminated**	PDI[1)] Watchdog Timeout A PDI watchdog timeout error has occurred.

1) PDI = Process Data Interface

LED "LINK/ACT"

Status	Meaning
Off	No link available. No physical connection to a neighboring device was detected.
Green **Illuminated**	Link available, no bus activity. A physical connection to a neighboring device was detected. No data is being exchanged via the Ethernet port.
Green **Flickering**	Link available, bus activity. A physical connection to a neighboring device was detected. Data is being exchanged via the Ethernet port.

13.7.3 Bus-specific LEDs for PROFINET IO CFN

"BF" LED

This LED indicates the status of the PROFINET interface. The state includes communication link, bus error and process data configuration.

Status	Possible cause	Measure
Off	Error-free operating state. The PROFINET device is exchanging data with the PROFINET controller (Data Exchange state).	–

33955948/EN – 05/2026

Status	Possible cause	Measure
Red **Flashing**	Faulty topology, media redundancy, interface settings (baud rate, half/full duplex).	Check and correct the topology, media redundancy, interface settings (baud rate, half/full duplex) if necessary.
Red **Permanently lit**	Connection to the PROFINET controller has failed. Bus communication has been interrupted.	Check the PROFINET connection of the PROFINET device. Check all the cables in the PROFINET network.
	The PROFINET controller is not in operation.	Check the PROFINET controller.
	The PROFINET device does not detect a PROFINET baud rate.	Check the configuration of the PROFINET controller.
Yellow **Permanently lit**	There is a connection to the PROFINET controller, but the configuration of the PROFINET network is faulty. The following errors may have occurred: • A hardware module was selected that does not support the PROFINET interface. • The standard process data and the safe process data were mixed and assigned to to the PROFINET device.	Check the configuration of the PROFINET controller.

"US1" LED

This LED indicates the status of the PROFINET interface. The state includes the start-up, normal operation, error mode and energy-saving operation operating modes.

Status	Possible cause	Measure
Yellow **Flashing** Switch-on time: 250 ms Switch-off time: 250 ms	The PROFINET interface is just starting up after a reset.	–
Green **Permanently lit**	The PROFINET interface is operating without errors.	–
Green **Flashing** Switch-on time: 500 ms Switch-off time: 3000 ms	The PROFINET interface is in energy-saving mode (PROFIenergy mode).	–
Red **Permanently lit**	The PROFINET interface has detected a fault. **Note:** A timeout of the PROFINET connection is not an internal fault.	Switch the device off and back on again. If the fault occurs repeatedly, contact SEW-EURODRIVE Service.

33955948/EN – 05/2026

"LNK/ACT" LED

Status	Meaning
All LEDs **Green** **Permanently lit**	A physical connection to another Ethernet node was detected. Currently, no data is being exchanged via the Ethernet port.
All LEDs **Flashing green** Cyclic duration factor: 500 ms Switch-off time: 500 ms	The flashing test has been activated to localize the Ethernet nodes visually.
All LEDs **Off**	No physical connection to further Ethernet nodes was detected.
LED at the respective Ethernet port **Green/yellow** **Flashing**	Data is being sent or received via the Ethernet port.

13.7.4 EtherNet/IP™ and Modbus TCP CFE fieldbus variant

"NS" LED

Status	Possible cause	Measure
– **Off**	The device is switched off. No DC 24 V supply.	• Check the DC 24 V supply. • Switch on the device again.
	The IP address is not set.	• Set the IP address.
Green **Flashing**	The connection to the Ethernet master has failed. The device does not detect a connection to the Ethernet master (bus error).	• Check the Ethernet connection of the device. • Check all Ethernet connections.
Green **Illuminated**	The IP address is set. The Ethernet connection has been established.	–
Red **Flashing**	The timeout time of the controlling connection has expired. The status is reset by restarting communication.	• Check the fieldbus connection. • Check the master/scanner. • Check all Ethernet connections.
Red **Illuminated**	A conflict was detected during IP address assignment.	• Check whether another device with the same IP address is available in the network. • Change the IP address of the device. • Check the DHCP settings for IP address assignment of the DHCP server (only when using a DHCP server).

33955948/EN – 05/2026

Status	Possible cause	Measure
Red/green **Flashing**	The device is performing an LED test. This state may only be active for a short time during startup.	–
	The device has received the designated target unit network ID (TUNID). The LED will keep flashing until the device has received the APPLY_TUNID service and the validation is successfully completed.	

"MS" LED

State	Possible cause	Measure
– **Off**	No power supply or DC 24 V supply.	• Check the voltage supply.
Green **Flashing**	The device has not been configured yet.	• Configure the device. • Check the DHCP server connection (only if DHCP is activated and the state is persistent).
Green **Illuminated**	Device OK.	–
Red **Flashing**	A recoverable error has occurred on the device.	• Check whether another device with the same IP address is available in the network. • Change the IP address of the device. • Check the DHCP settings for IP address assignment of the DHCP server (only when using a DHCP server).
Red **Illuminated**	An unrecoverable error has occurred on the device.	• Switch on the device again. • Reset the device to the factory settings. • If this error occurs repeatedly, replace the device or contact SEW-EURODRIVE Service.
Red/green **Flashing**	The device is performing an LED test. This state may only be active for a short time during startup.	–
	The device is waiting for a target unit network ID (TUNID).	Assign a target unit network ID (TUNID) to the device.
	Parameterization of the device is required.	Check the parameterization of the safety option.

33955948/EN – 05/2026

"LNK/ACT" LED

Status	Meaning
All LEDs **Green** **Permanently lit**	A physical connection to another Ethernet node was detected. Currently, no data is being exchanged via the Ethernet port.
All LEDs **Flashing green** Cyclic duration factor: 500 ms Switch-off time: 500 ms	The flashing test has been activated to localize the Ethernet nodes visually.
All LEDs **Off**	No physical connection to further Ethernet nodes was detected.
LED at the respective Ethernet port **Green/yellow, flashing**	Data is being sent or received via the Ethernet port.

13.7.5 Bus-specific LEDs for POWERLINK CFL

"BS" LED

LED	Meaning
Off	"INIT" state The interface is in "INIT" state.
Green **Flickering**	"BASIC ETHERNET Mode" state None of the SoA, SoC, PReq, or PRes message types detected.
Green **Flashing once**	"PRE_OPERATIONAL_1Mode" state Only acyclic communication is possible.
Green **Flashing twice**	"PRE_OPERATIONAL_2Mode" state Acyclic and cyclic communication are possible. Process data not valid.
Green **Flashing three times**	"READY_TO_OPERATE_Mode" state
Green **Flashing**	"STOPPED_Mode" state
Green **Illuminated**	"OPERATIONAL Mode" state

33955948/EN – 05/2026

"BE" LED

LED	Meaning	Measure
Off	Transition to "OPERATIONAL_Mode" state	–
	Software reset of the NMT state machine (start basic node initialization)	–
	Transition to "BASIC_ETHERNET_Mode" state after a timeout of the SoC, PReq, PRes, and SoA message types.	–
Red **Illuminated**	POWERLINK cycle time exceeded.	Check/adjust the network.
	The number of managing nodes (MN) in the POWERLINK network is > 1.	Check/adjust the network. Configure only 1 managing node.
	Invalid Ethernet frame format, such as incorrect Ethernet CRC (redundancy checksum)	Check/adjust the network.
	Loss of frame	Check/adjust the network.
	Frame collision	Check/adjust the network.
	Invalid IP address	Set a valid IP address.

"LNK/ACT" LED

Status	Meaning
All LEDs **Green** **Permanently lit**	A physical connection to another Ethernet node was detected. Currently, no data is being exchanged via the Ethernet port.
All LEDs **Flashing green** Cyclic duration factor: 500 ms Switch-off time: 500 ms	The flashing test has been activated to localize the Ethernet nodes visually.
All LEDs **Off**	No physical connection to further Ethernet nodes was detected.
LED at the respective Ethernet port **Green/yellow, flashing**	Data is being sent or received via the Ethernet port.

33955948/EN – 05/2026

13.8 Fault description for basic device

13.8.1 Error 1 Output stage monitoring

Error: 01.01 (0101hex | 257dec) Description: Overcurrent on motor output terminals	
Response: Output stage inhibit	
Cause	Measure
Short circuit at the motor output.	– Check motor cable for short circuit. – Remove the short circuit.
Power output stage defective.	Contact SEW-EURODRIVE Service.
Motor current too high.	Connect a smaller motor.

Error: 01.02 (0102hex | 258dec) Description: Overcurrent in output stage	
Response: Output stage inhibit	
Cause	Measure
Motor current too high.	Connect a smaller motor.
Current controller of intelligent supply module set incorrectly.	Contact SEW-EURODRIVE Service.
Ramp time too short.	Increase the ramp time.
One of the following components is defective: – Internal current supply – Current measurement – Phase module	Contact SEW-EURODRIVE Service.
The external supply voltage DC 24 V is unstable.	Check the DC 24 V supply voltage.
The voltage fluctuations are too strong. The current controller of the intelligent power supply module cannot compensate for them.	– Stabilize the voltage. – Check the supply. – Check the project planning.

33955948/EN – 05/2026

13.8.2 Error 3 Ground error

Error: 03.01 (0301hex | 769dec) Description: Ground fault		
	Response: Output stage inhibit	
	Cause	Measure
	Ground fault in the motor cable.	Eliminate the ground fault.
	Ground fault in the inverter.	Contact SEW-EURODRIVE Service.
	Ground fault in the motor.	Eliminate the ground fault.
	Ground fault in line components.	Eliminate the ground fault.
	Ground fault detected in the storage line.	Eliminate the ground fault.
	Ground fault detected in the storage.	Contact the service department of the respective storage manufacturer.

13.8.3 Error 4 Brake chopper

Error: 04.01 (0401hex | 1025dec) Description: Overcurrent in brake chopper		
	Response: Output stage inhibit	
	Cause	Measure
	Excessive regenerative power.	Decrease deceleration.
	Short circuit in braking resistor circuit.	Check supply cable to braking resistor.
	Braking resistor impedance too low.	Check the minimum permitted resistance value of the braking resistor and connected a suitable braking resistor.

Error: 04.02 (0402hex | 1026dec) Description: Brake chopper defective		
	Response: Output stage inhibit	
	Cause	Measure
	Brake chopper defective.	Contact SEW-EURODRIVE Service.

13.8.4 Error 6 Line error

Error: 06.01 (0601hex | 1537dec) Description: Line phase failure		
	Response: Line phase failure	
	Cause	Measure
	Line phase missing.	Check the supply system cable.
	Poor line voltage quality.	Check supply (fuses, contactor, line components).
	DC link voltage periodically too low.	Check the line voltage.

13.8.5 Error 7 DC link

Error: 07.01 (0701hex | 1793dec) Description: DC link overvoltage		
	Response: Output stage inhibit	
	Cause	Measure
	Maximum permitted DC link voltage limit exceeded.	– Check the connection of the braking resistor. – Decrease deceleration. – Check the configuration of the braking resistor (resistance value).

Error: 07.02 (0702hex | 1794dec) Description: DC link discharge failed		
	Response: Warning	
	Cause	Measure
	DC link voltage level not dropped below discharge threshold within discharge time.	Contact SEW-EURODRIVE Service.

13.8.6 Error 8 Speed monitoring

Error: 08.01 (0801hex | 2049dec) Description: Speed monitoring – motor mode		
	Response: Output stage inhibit	
	Cause	Measure
	Speed controller operates at setting limit (mechanical overload or phase failure in supply system or motor).	– Increase delay time of speed monitoring. – Reduce the load. – Increase current limiting/torque limiting. – Reduce the acceleration. – Check the motor cable, motor, and line phases.
	Encoder not connected correctly.	Check the encoder connection.
	Encoder has incorrect direction of rotation.	Check the direction of rotation.

33955948/EN – 05/2026

Error: 08.02 (0802hex | 2050dec) Description: Speed monitoring – generator mode		
	Response: Output stage inhibit	
	Cause	Measure
	Speed controller operates at setting limit (mechanical overload or phase failure in supply system or motor).	– Increase delay time of speed monitoring. – Reduce the load. – Increase current limiting/torque limiting. – Decrease deceleration. – Check the motor cable, motor, and line phases.
	Encoder not connected correctly.	Check the encoder connection.
	Encoder has incorrect direction of rotation.	Check the direction of rotation.

Error: 08.03 (0803hex | 2051dec) Description: Maximum speed at motor shaft exceeded		
	Response: Output stage inhibit	
	Cause	Measure
	The actual speed has exceeded the limit value "Maximum speed at motor shaft". This limit value is set to match the motor and gear unit at startup.	Reduce the maximum motor speed.
	The setpoint is too high.	Reduce the setpoint.
	The motor is driven by the load.	Check the project planning of the drive.

13.8.7 Fault 9 Control mode

Error: 09.01 (0901hex | 2305dec) Description: Magnetization of motor not possible		
	Response: Output stage inhibit	
	Cause	Measure
	The user-defined current limit or the output stage monitoring has reduced the available current too much, so that the required magnetizing current or the required measuring current cannot be set.	– Reduce output stage utilization by reducing the PWM frequency or the load. – Increase user-defined current limit. – Connect a smaller motor.

Error: 09.02 (0902hex | 2306dec) Description: Operating mode not possible with active control mode		
	Response: Output stage inhibit	
	Cause	Measure
	The active control mode does not support the operating mode selected in the current FCB. EXAMPLE: The V/f control mode does not support the FCB "Position control" or "Torque control".	– Use a control mode that supports the required operating mode. If necessary, connect an encoder. or – Select an operating mode that is supported by the current control mode.

Error: 09.03 (0903hex | 2307dec) Description: Absolute rotor position not available		
	Response: Output stage inhibit	
	Cause	Measure
	The active control mode requires an absolute rotor position. The encoder set as the source of the actual speed does not provide an absolute rotor position.	– Use an absolute encoder. or – Identify the rotor position using FCB 18.

Error: 09.04 (0904hex | 2308dec) Description: Correct current supply of motor not possible		
	Response: Output stage inhibit	
	Cause	Measure
	With active current monitoring during premagnetization, the required current could not be impressed into the motor.	– Check motor cable. – Check the motor winding connection (star, delta). – If the error occurs repeatedly, contact SEW-EURODRIVE Service. Information for SEW-EURODRIVE Service: Check output stage.

Error: 09.05 (0905hex | 2309dec) Description: Maximum output frequency exceeded		
	Response: Output stage inhibit	
	Cause	Measure
	Maximum output frequency exceeded.	– Reduce maximum rotation speed/maximum speed. – Reduce setpoint.

Error: 09.06 (0906hex | 2310dec) Description: Maximum model speed exceeded		
	Response: Output stage inhibit	
	Cause	Measure
	The motor speed calculated in ELSM® control mode is too high for motor control.	– Reduce the sampling cycle ("Sampling cycle n/x control" parameter). – Reduce the speed.

33955948/EN – 05/2026

Error: 09.07 (0907hex | 2311dec) Description: Correct motor current supply not possible during operation		
	Response: Output stage inhibit	
	Cause	Measure
	With active current monitoring during operation, the required current could not be applied to the motor.	– Check motor cable. – Check motor windings. – If the error occurs repeatedly, contact SEW-EURODRIVE Service. Information for SEW-EURODRIVE Service: Check output stage.

Error: 09.08 (0908hex | 2312dec) Description: Motor protection function – demagnetization		
	Response: Output stage inhibit	
	Cause	Measure
	The motor is blocked.	Check the motor for blockage.
	Motor has already been operated at a speed below the transition speed for too long.	Check the drive selection.
	Motor has not been started up properly.	Perform motor startup again and run the drive function "FCB 25 Motor parameter measurement".

Error: 09.09 (0909hex | 2313dec) Description: Parameter measurement not possible with active motor type		
	Response: Output stage inhibit	
	Cause	Measure
	Only the parameters of an asynchronous motor or synchronous motor can be measured.	Omit parameter measurement.

Error: 09.10 (090Ahex | 2314dec) Description: Rotor stall monitoring		
	Response: Output stage inhibit	
	Cause	Measure
	Current control cannot hold load torque.	Reduce the load.

Error: 09.11 (090Bhex | 2315dec) Description: Standstill current function not possible		
	Response: Output stage inhibit	
	Cause	Measure
	In ELSM® control mode, the standstill current function can only be used if the rotor position can be measured.	Activate rotor position measurement and perform the drive function "FCB 25 Motor parameter measurement".

33955948/EN – 05/2026

Error: 09.13 (090Dhex | 2317dec) Description: Torque control not within valid speed range		
	Response: Output stage inhibit	
	Cause	Measure
	Motor speed too low.	– Perform motor startup again and run the drive function "FCB 25 Motor parameter measurement". – If the error occurs repeatedly, contact SEW-EURODRIVE Service.
	The flying start function is deactivated.	Activate the flying start function.
	The motor is blocked.	Check the motor for blockage.

Error: 09.14 (090Ehex | 2318dec) Description: Transition of open-loop speed control to closed-loop speed control failed		
	Response: Output stage inhibit	
	Cause	Measure
	The motor is blocked.	Check the motor for blockage.
	The motor accelerates too slowly.	Check the setting of the speed controller parameter "Load moment of inertia".
	Ohmic resistance was measured incorrectly.	If the ohmic resistance of the motor cable is smaller than 10% of the ohmic resistance of the motor winding, deactivate the parameter "Measure stator resistance".
	Motor has not been started up properly.	Perform motor startup again and run the drive function "FCB 25 Motor parameter measurement".
	The drive is overloaded by mechanical sluggishness.	– Reduce the load. – Check the mechanical components. – Check the drive selection.

Error: 09.15 (090Fhex | 2319dec) Description: Timeout		
	Response: Output stage inhibit	
	Cause	Measure
	The parameterization of the motor model is implausible.	– Perform motor startup again and run the drive function "FCB 25 Motor parameter measurement". – If the error occurs repeatedly, contact SEW-EURODRIVE Service.

33955948/EN – 05/2026

Error: 09.16 (0910hex | 2320dec) Description: Deviation of motor inductance too large		
	Response: Output stage inhibit	
	Cause	Measure
	The measured motor inductance differs greatly from the inductance in the motor data set.	– Check motor startup and perform again. – Check the connection type of the motor winding (star/delta).

13.8.8 Error 10 Data Flexibility

Error: 10.01 (0A01hex | 2561dec) Description: Initialization error		
	Response: Application stop + output stage inhibit	
	Cause	Measure
	Error detected in the init task. The return code is not equal to 0.	Check the program. Contact SEW-EURODRIVE Service.

Error: 10.02 (0A02hex | 2562dec) Description: Illegal operation code		
	Response: Application stop + output stage inhibit	
	Cause	Measure
	Unknown program command (illegal opcode) detected in Data Flexibility program.	Check the program. Contact SEW-EURODRIVE Service.
	The version of the MOVIKIT® software module in use does not run with the current firmware version of the device.	– Adjust the firmware version of the device according to the version overview in the installation notes. or – Adjust the version of the MOVIKIT® software module according to the version overview in the installation notes. In the context menu of the device, execute the [Adjust version and device] menu command.

Error: 10.03 (0A03hex | 2563dec) Description: Access to memory defective		
	Response: Application stop + output stage inhibit	
	Cause	Measure
	Memory area violated while accessing array. For example, an address that does not exist or is not permitted was addressed.	Check the program. Contact SEW-EURODRIVE Service.

Error: 10.04 (0A04hex | 2564dec) Description: Stack overflow		
	Response: Application stop + output stage inhibit	
	Cause	Measure
	Overflow of Data Flexibility stack detected.	Check the program. Contact SEW-EURODRIVE Service.

Error: 10.05 (0A05hex | 2565dec) Description: Division by 0		
	Response: Application stop + output stage inhibit	
	Cause	Measure
	Division by 0 was performed in the program.	Check the program. Contact SEW-EURODRIVE Service.

Error: 10.06 (0A06hex | 2566dec) Description: Runtime error		
	Response: Application stop + output stage inhibit	
	Cause	Measure
	The watchdog has detected an error. The program runtime exceeds the permitted time.	Check the program. Contact SEW-EURODRIVE Service.
	Execution time of PDI task or PDO task exceeds permitted time.	– Use slicing mode. – Check the program. Contact SEW-EURODRIVE Service.

Error: 10.07 (0A07hex | 2567dec) Description: Calculation result too large		
	Response: Application stop + output stage inhibit	
	Cause	Measure
	Calculation result of multiplication/division command exceeds 32 bits.	Check the program. Contact SEW-EURODRIVE Service.
	Failed to write calculation result of multiplication/ division command into result variable.	Check the program. Contact SEW-EURODRIVE Service.

Error: 10.08 (0A08hex | 2568dec) Description: Illegal connection		
	Response: Application stop + output stage inhibit	
	Cause	Measure
	The parameter index to be linked with the connect command in the init task does not exist or is not permitted for access via process data (see parameter list).	Check the program. Contact SEW-EURODRIVE Service.

33955948/EN – 05/2026

Error: 10.09 (0A09hex | 2569dec) Description: CRC error		
	Response: Application stop + output stage inhibit	
	Cause	Measure
	The checksum (CRC) is incorrect. This can be due to the following reasons: – The program memory is corrupt. – Unauthorized write access was executed on the program memory.	Adjust the program and load it again.

Error: 10.10 (0A0Ahex | 2570dec) Description: Setpoint cycle time not supported		
	Response: Application stop + output stage inhibit	
	Cause	Measure
	The set setpoint cycle time is not supported.	Set the setpoint cycle time to the default value of 1 ms.

Error: 10.11 (0A0Bhex | 2571dec) Description: No application program loaded		
	Response: Output stage inhibit	
	Cause	Measure
	No Data Flexibility application program loaded.	– Load program. or – Deactivate Data Flexibility.

Error: 10.12 (0A0Chex | 2572dec) Description: Runtime warning		
	Response: Warning	
	Cause	Measure
	The program requires more runtime than has been configured.	Check the program. Contact SEW-EURODRIVE Service.

Error: 10.20 (0A14hex | 2580dec) Description: Application error – warning		
	Response: Warning	
	Cause	Measure
	Error detected in the application program.	Check the program. Contact SEW-EURODRIVE Service.

33955948/EN – 05/2026

Error: 10.21 (0A15hex | 2581dec) **Description: Application error – application stop + output stage inhibit**		
	Response: Application stop + output stage inhibit	
	Cause	Measure
	Error detected in the application program.	Check the program. Contact SEW-EURODRIVE Service.

Error: 10.22 (0A16hex | 2582dec) **Description: Application error – emergency stop + output stage inhibit**		
	Response: Emergency stop + output stage inhibit	
	Cause	Measure
	Error detected in the application program.	Check the program. Contact SEW-EURODRIVE Service.

Error: 10.23 (0A17hex | 2583dec) **Description: Application error – output stage inhibit**		
	Response: Output stage inhibit	
	Cause	Measure
	Error detected in the application program.	Check the program. Contact SEW-EURODRIVE Service.

Error: 10.24 (0A18hex | 2584dec) **Description: Application error – warning with self-reset**		
	Response: Warning with self-reset	
	Cause	Measure
	Error detected in the application program.	Check the program. Contact SEW-EURODRIVE Service.

Error: 10.25 (0A19hex | 2585dec) **Description: Application error – application stop + output stage inhibit with self-reset**		
	Response: Application stop + output stage inhibit with self-reset	
	Cause	Measure
	Error detected in the application program.	Check the program. Contact SEW-EURODRIVE Service.

Error: 10.26 (0A1Ahex | 2586dec) **Description: Application error – emergency stop + output stage inhibit with self-reset**		
	Response: Emergency stop + output stage inhibit with self reset	
	Cause	Measure
	Error detected in the application program.	Check the program. Contact SEW-EURODRIVE Service.

33955948/EN – 05/2026

Error: 10.27 (0A1Bhex | 2587dec) Description: Application error – output stage inhibit with self-reset		
	Response: Output stage inhibit with self reset	
	Cause	Measure
	Error detected in the application program.	Check the program. Contact SEW-EURODRIVE Service.

Error: 10.99 (0A63hex | 2659dec) Description: Unknown error		
	Response: Application stop + output stage inhibit	
	Cause	Measure
	Unknown Data Flexibility error.	Contact SEW-EURODRIVE Service.

13.8.9 Fault 11 Temperature monitoring

Error: 11.01 (0B01hex | 2817dec) Description: Heat sink overtemperature		
	Response: Output stage inhibit	
	Cause	Measure
	The capacity utilization is too high. Maximum permitted heat sink temperature exceeded.	– Reduce the load. – Reduce the PWM frequency. – Reduce the ambient temperature.
	Air circulation disrupted. Maximum permitted heat sink temperature exceeded.	– Check air circulation. – Ensure sufficient cooling.
	The fan (if available) is defective. Maximum permitted heat sink temperature exceeded.	Contact SEW-EURODRIVE Service.
	Temperature sensor defective. Maximum permitted heat sink temperature exceeded.	Contact SEW-EURODRIVE Service.
	The fan (if available) is blocked or dirty.	– Remove foreign objects. – Clean the fan.

33955948/EN – 05/2026

Error: 11.02 (0B02hex | 2818dec) Description: Heat sink utilization – prewarning		
	Response: Heat sink utilization – prewarning	
	Cause	Measure
	High thermal load on heat sink of device. The prewarning threshold has been reached.	– Reduce the load. – Reduce the PWM frequency. – Reduce the ambient temperature.
	Air circulation disrupted. The prewarning threshold has been reached.	– Check air circulation. – Ensure sufficient cooling.
	The fan (if available) is defective. The prewarning threshold has been reached.	Contact SEW-EURODRIVE Service.
	Temperature sensor defective. The prewarning threshold has been reached.	Contact SEW-EURODRIVE Service.
	Unfavorable air convection.	Check the air convection.
	The fan (if available) is blocked or dirty.	– Remove foreign objects. – Clean the fan.

Error: 11.03 (0B03hex | 2819dec) Description: Device utilization		
	Response: Output stage inhibit	
	Cause	Measure
	The mean output current is too high. The device utilization has reached or exceeded the switch-off threshold.	– Reduce the load. – Check motor/inverter combination.
	The PWM frequency is too high. The device utilization has reached or exceeded the switch-off threshold.	Reduce the PWM frequency.
	The ambient temperature is too high. The device utilization has reached or exceeded the switch-off threshold.	Reduce the ambient temperature.
	Air circulation disrupted. The device utilization has reached or exceeded the switch-off threshold.	– Check air circulation. – Ensure sufficient cooling.
	The fan (if available) is defective. The device utilization has reached or exceeded the switch-off threshold.	Contact SEW-EURODRIVE Service.
	The fan (if available) is blocked or dirty.	– Remove foreign objects. – Clean the fan.

33955948/EN – 05/2026

Error: 11.05 (0B05hex | 2821dec) Description: Electromechanical utilization		
	Response: Output stage inhibit	
	Cause	Measure
	Electromechanical components of device overloaded by excessive continuous current.	Reduce the load.

Error: 11.06 (0B06hex | 2822dec) Description: Electromechanical utilization – prewarning		
	Response: Electromechanical utilization – prewarning	
	Cause	Measure
	High load on electromechanical components of the device due to high continuous current. The prewarning threshold has been reached.	Reduce the load.

Error: 11.07 (0B07hex | 2823dec) Description: Wire break at temperature sensor of heat sink		
	Response: Output stage inhibit	
	Cause	Measure
	Wire break at temperature sensor of heat sink.	Contact SEW-EURODRIVE Service.

Error: 11.08 (0B08hex | 2824dec) Description: Short circuit at temperature sensor of heat sink		
	Response: Output stage inhibit	
	Cause	Measure
	Short circuit at temperature sensor of heat sink.	Contact SEW-EURODRIVE Service.

Error: 11.09 (0B09hex | 2825dec) Description: Overtemperature of signal electronics		
	Response: Output stage inhibit	
	Cause	Measure
	Maximum permitted signal electronics temperature exceeded.	– Reduce the load. – Reduce the ambient temperature.

Error: 11.10 (0B0Ahex | 2826dec) Description: Wire break at temperature sensor of signal electronics		
	Response: Output stage inhibit	
	Cause	Measure
	Wire break at temperature sensor of signal electronics.	Contact SEW-EURODRIVE Service.

33955948/EN – 05/2026

Error: 11.11 (0B0Bhex | 2827dec) Description: Short circuit at temperature sensor of signal electronics		
	Response: Output stage inhibit	
	Cause	Measure
	Short circuit at temperature sensor of signal electronics.	Contact SEW-EURODRIVE Service.

Error: 11.24 (0B18hex | 2840dec) Description: Overtemperature of rectifier		
	Response: Output stage inhibit	
	Cause	Measure
	The maximum permitted rectifier temperature has been exceeded.	– Ensure sufficient cooling. – Reduce the ambient temperature.
	Air circulation disrupted.	– Check air circulation. – Ensure sufficient cooling.
	The fan (if available) is defective.	Contact SEW-EURODRIVE Service.
	Temperature sensor defective.	Contact SEW-EURODRIVE Service.
	Unfavorable air convection.	Check the air convection.
	The heat sink of the rectifier is subject to a high thermal load.	Reduce the ambient temperature.
	The fan (if available) is blocked or dirty.	– Remove foreign objects. – Clean the fan.

Error: 11.25 (0B19hex | 2841dec) Description: Rectifier utilization – prewarning		
	Response: Heat sink utilization – prewarning	
	Cause	Measure
	Air circulation disrupted. The prewarning threshold has been reached.	– Check air circulation. – Ensure sufficient cooling.
	The fan (if available) is defective. The prewarning threshold has been reached.	Contact SEW-EURODRIVE Service.
	Temperature sensor defective. The prewarning threshold has been reached.	Contact SEW-EURODRIVE Service.
	Unfavorable air convection.	Check the air convection.
	The heat sink of the rectifier is subject to a high thermal load. The prewarning threshold has been reached.	Reduce the ambient temperature.
	The fan (if available) is blocked or dirty.	– Remove foreign objects. – Clean the fan.

33955948/EN – 05/2026

Error: 11.26 (0B1Ahex | 2842dec) Description: Brake chopper overtemperature		
	Response: Output stage inhibit	
	Cause	Measure
	The maximum permitted temperature of the brake chopper has been exceeded.	– Reduce the regenerative energy of the system. – Ensure sufficient cooling. – Reduce the ambient temperature.
	Air circulation disrupted.	– Check air circulation. – Ensure sufficient cooling.
	The fan (if available) is defective.	Contact SEW-EURODRIVE Service.
	Temperature sensor defective.	Contact SEW-EURODRIVE Service.
	Unfavorable air convection.	Check the air convection.
	The heat sink of the brake chopper is subject to a high thermal load.	Reduce the ambient temperature.
	The fan (if available) is blocked or dirty.	– Remove foreign objects. – Clean the fan.

Error: 11.27 (0B1Bhex | 2843dec) Description: Brake chopper utilization – prewarning		
	Response: Heat sink utilization – prewarning	
	Cause	Measure
	Air circulation disrupted. The prewarning threshold has been reached.	– Check air circulation. – Ensure sufficient cooling.
	The fan (if available) is defective. The prewarning threshold has been reached.	Contact SEW-EURODRIVE Service.
	Temperature sensor defective. The prewarning threshold has been reached.	Contact SEW-EURODRIVE Service.
	Unfavorable air convection.	Check the air convection.
	The heat sink of the brake chopper is subject to a high thermal load. The prewarning threshold has been reached.	Reduce the ambient temperature.
	The fan (if available) is blocked or dirty.	– Remove foreign objects. – Clean the fan.

33955948/EN – 05/2026

13.8.10 Fault 12 Brake

Error: 12.01 (0C01hex | 3073dec) Description: Brake output fault		
	Response: Application stop + output stage inhibit	
	Cause	Measure
	No brake connected.	– Check the brake connection. – Check the startup.
	Brake cable disconnected in switched-on state.	Check the connection of the brake.
	The brake was overloaded by an overcurrent > 2 A.	– Make sure that the connected brake is permitted. – Check the brake.
	The brake was overloaded by frequent connection (> 0.5 Hz).	Reduce the switching frequency of the brake.

Error: 12.02 (0C02hex | 3074dec) Description: DC 24 V brake voltage outside tolerance range		
	Response: Application stop + output stage inhibit	
	Cause	Measure
	The DC 24 V supply voltage is outside the tolerance range of 24 – 26.4 V.	Check the DC 24 V supply voltage.

Error: 12.20 (0C14hex | 3092dec) Description: Digital motor integration – critical error		
	Response: Output stage inhibit with self reset	
	Cause	Measure
	The integrated brake control has detected a critical error.	Observe the error message of the subslave. Identify the exact cause of this error message and take the appropriate measures to eliminate the error.

Error: 12.21 (0C15hex | 3093dec) Description: Digital motor integration – error		
	Response: Emergency stop + output stage inhibit with self reset	
	Cause	Measure
	The integrated brake control has detected an error.	Observe the error message of the subslave. Identify the exact cause of this error message and take the appropriate measures to eliminate the error.

33955948/EN – 05/2026

Error: 12.22 (0C16hex | 3094dec) Description: Digital motor integration – warning		
	Response: Warning with self-reset	
	Cause	Measure
	The integrated brake control signaled a warning.	Observe the warning of the subslave. Identify the exact cause of this warning and take the appropriate measures for elimination.

Error: 12.23 (0C17hex | 3095dec) Description: Digital motor integration – timeout		
	Response: Output stage inhibit	
	Cause	Measure
	Communication with the integrated brake control is disrupted.	Check the connection.

Error: 12.24 (0C18hex | 3096dec) Description: Digital motor integration – initialization error		
	Response: Output stage inhibit	
	Cause	Measure
	Initialization of integrated brake control failed.	– Acknowledge the error. – If the error occurs repeatedly, contact SEW-EURODRIVE Service.

13.8.11 Fault 13 Encoder 1

Error: 13.01 (0D01hex | 3329dec) Description: Error during position comparison check		
	Response: Encoder 1 – latest critical error	
	Cause	Measure
	Fault detected when comparing raw position and track counter of absolute encoder.	– Check the wiring of the track signals. – Check for EMC-compliant installation. – Replace the encoder. – Replace the encoder card. Note that in the manual mode "emergency mode", you can move the drive using the motor encoder even if the external position encoder is faulty.

Error: 13.02 (0D02hex | 3330dec) Description: Unknown encoder type		
	Response: Encoder 1 – latest critical error	
	Cause	Measure
	Encoder type not known and not supported by device.	– Check the encoder type. – Contact SEW-EURODRIVE Service. Note that in the manual mode "emergency mode", you can move the drive using the motor encoder even if the external position encoder is faulty.

Error: 13.03 (0D03hex | 3331dec) Description: Invalid data		
	Response: Encoder 1 – latest critical error	
	Cause	Measure
	Invalid encoder nameplate data (measuring steps/pulses per revolution/multi-turn).	Use a different encoder type. Note that in the manual mode "emergency mode", you can move the drive using the motor encoder even if the external position encoder is faulty.
	The ratio of motor encoder resolution and external encoder resolution is too large.	– Check the startup. – Check the project planning. – Check whether a suitable encoder is being used. Note that in the manual mode "emergency mode", you can move the drive using the motor encoder even if the external position encoder is faulty.
	The number of pole pairs of the resolver is not equal to 1 in "Single-turn absolute position" position mode.	– Change the positioning mode of the encoder. – Use a resolver that has 1 as its number of pole pairs.

Error: 13.04 (0D04hex | 3332dec) Description: Track measurement error		
	Response: Encoder 1 – latest critical error	
	Cause	Measure
	Error during track measurement.	– Switch the device off and on again. – Check the wiring. – Check for EMC-compliant installation. – Check the encoder. Replace if necessary. Note that in the manual mode "emergency mode", you can move the drive using the motor encoder even if the external position encoder is faulty.

3955948/EN – 05/2026

Error: 13.05 (0D05hex | 3333dec) Description: Internal warning		
	Response: Encoder – warning	
	Cause	Measure
	Encoder signaled a warning.	– Check the wiring. – Check interference sources (light beam interrupted, reflector, signal cables, etc.). – Clean the sensor.

Error: 13.06 (0D06hex | 3334dec) Description: Signal level too low		
	Response: Encoder 1 – latest critical error	
	Cause	Measure
	The amount resulting from the level of the two track signals A and B is lower than the permissible limit.	– Check the wiring. – Check for EMC-compliant installation. – Check the encoder. Note that in the manual mode "emergency mode", you can move the drive using the motor encoder even if the external position encoder is faulty.

Error: 13.07 (0D07hex | 3335dec) Description: Signal level too high		
	Response: Encoder 1 – latest critical error	
	Cause	Measure
	The amount resulting from both or one of the two track signals A and B exceeds the permitted limit.	Check the transmission ratio of the resolver in use.

Error: 13.08 (0D08hex | 3336dec) Description: Error during level monitoring		
	Response: Encoder 1 – latest critical error	
	Cause	Measure
	The amount resulting from the level of the two track signals A and B exceeds the permissible limit.	Check the mounting position of the resolver.

33955948/EN – 05/2026

Error: 13.09 (0D09hex | 3337dec) Description: Error during quadrant check		
	Response: Encoder 1 – latest critical error	
	Cause	Measure
	Error checking quadrants (sine tracks/cosine tracks).	– Switch the device off and on again. – Check the wiring. – Check for EMC-compliant installation. – Check the encoder. Replace if necessary. Note that in the manual mode "emergency mode", you can move the drive using the motor encoder even if the external position encoder is faulty.

Error: 13.10 (0D0Ahex | 3338dec) Description: Position tolerance range exceeded		
	Response: Encoder 1 – latest critical error	
	Cause	Measure
	Jump in position impermissibly large.	– Check the startup parameters. – Check the wiring. – Check interference sources (light beam interrupted, reflector, signal cables, etc.). – Replace the encoder. Note that in the manual mode "emergency mode", you can move the drive using the motor encoder even if the external position encoder is faulty.

Error: 13.11 (0D0Bhex | 3339dec) Description: Encoder data timeout	
	Response: Encoder 1 – latest critical error
Cause	Measure
Internal error detected in resolver evaluation.	Check for EMC-compliant installation.
Communication to the encoder has failed.	Contact SEW-EURODRIVE Service.

Error: 13.12 (0D0Chex | 3340dec) Description: Emergency		
	Response: Encoder 1 – latest critical error	
	Cause	Measure
	CANopen encoder signals emergency.	For measures to correct the error, refer to the documentation of the respective encoder. Note that in the manual mode "emergency mode", you can move the drive using the motor encoder even if the external position encoder is faulty.

33955948/EN – 05/2026

Error: 13.13 (0D0Dhex | 3341dec) Description: Initialization error		
	Response: Encoder 1 – latest error	
	Cause	Measure
	Communication error detected on RS485 interface during initialization.	– Check the wiring. – Check the startup parameters. – Check the encoder settings. Note that in the manual mode "emergency mode", you can move the drive using the motor encoder even if the external position encoder is faulty.

Error: 13.14 (0D0Ehex | 3342dec) Description: Communication error		
	Response: Encoder 1 – latest error	
	Cause	Measure
	Faulty communication with encoder.	– Check the voltage supply. – Check for EMC-compliant installation. – Check the wiring. – Replace the encoder. Note that in the manual mode "emergency mode", you can move the drive using the motor encoder even if the external position encoder is faulty.

Error: 13.15 (0D0Fhex | 3343dec) Description: System error		
	Response: Encoder 1 – latest critical error	
	Cause	Measure
	System error while evaluating encoder.	– Check the setting of the encoder numerator/denominator factors. – Check whether the frame length matches the set transmission rate. Note that in the manual mode "emergency mode", you can move the drive using the motor encoder even if the external position encoder is faulty.

33955948/EN – 05/2026

Error: 13.16 (0D10hex | 3344dec) **Description: High level in data line – critical fault**	
Response: Encoder 1 – latest critical error	
Cause	Measure
Permanent high level of data signal.	– Check the wiring. – Check the encoder. Note that in the manual mode "emergency mode", you can move the drive using the motor encoder even if the external position encoder is faulty.

Error: 13.17 (0D11hex | 3345dec) **Description: High level in data line – fault**	
Response: Encoder 1 – latest error	
Cause	Measure
Permanent high level of data signal.	– Check the wiring. – Check the encoder. Note that in the manual mode "emergency mode", you can move the drive using the motor encoder even if the external position encoder is faulty.

Error: 13.18 (0D12hex | 3346dec) **Description: Low level in data line – critical error**	
Response: Encoder 1 – latest critical error	
Cause	Measure
Permanent low level of data signal.	– Check the wiring. – Check the encoder. Note that in the manual mode "emergency mode", you can move the drive using the motor encoder even if the external position encoder is faulty.

Error: 13.19 (0D13hex | 3347dec) **Description: Low level in data line – error**	
Response: Encoder 1 – latest error	
Cause	Measure
Permanent low level of data signal.	– Check the wiring. – Check the encoder. Note that in the manual mode "emergency mode", you can move the drive using the motor encoder even if the external position encoder is faulty.

33955948/EN – 05/2026

Error: 13.20 (0D14hex | 3348dec) Description: SSI encoder – critical fault		
	Response: Encoder 1 – latest critical error	
	Cause	Measure
	SSI encoder detected a critical fault.	– Check the startup parameters. – Check the settings on the SSI encoder. – Check the wiring. – Check interference sources (light beam interrupted, reflector, signal cables, etc.). – Replace the encoder. Note that in the manual mode "emergency mode", you can move the drive even if the external position encoder is faulty.

Error: 13.21 (0D15hex | 3349dec) Description: SSI encoder – fault		
	Response: Encoder 1 – latest error	
	Cause	Measure
	SSI encoder detected an error.	– Check the startup parameters. – Check the settings on the SSI encoder. – Check the wiring. – Check interference sources (light beam interrupted, reflector, signal cables, etc.). – Replace the encoder. Note that in the manual mode "emergency mode", you can move the drive even if the external position encoder is faulty.

Error: 13.22 (0D16hex | 3350dec) Description: Critical internal error		
	Response: Encoder 1 – latest critical error	
	Cause	Measure
	Encoder signaled internal fault.	– Check the wiring. – Check interference sources (light beam interrupted, reflector, signal cables, etc.). – Replace the encoder. Note that in the manual mode "emergency mode", you can move the drive using the motor encoder even if the external position encoder is faulty.

Error: 13.23 (0D17hex | 3351dec) Description: Internal error		
	Response: Encoder 1 – latest error	
	Cause	Measure
	Encoder signaled internal fault. The encoder error code is displayed in MOVISUITE® in the [Diagnostics] > [Error memory T.] parameter group in the "Internal" parameter.	– Check the wiring. – Check interference sources (light beam interrupted, reflector, signal cables, etc.). – Replace the encoder. Note that in the manual mode "emergency mode", you can move the drive using the motor encoder even if the external position encoder is faulty.

Error: 13.24 (0D18hex | 3352dec) Description: Travel range exceeded		
	Response: Encoder 1 – latest error	
	Cause	Measure
	Current position mode does not enable larger travel range.	– Ensure that the multi-turn encoder remains within the configured track range. – Check the limits. – Check the "Position mode" parameter. Note that in the manual mode "emergency mode", you can move the drive using the motor encoder even if the external position encoder is faulty.

Error: 13.25 (0D19hex | 3353dec) Description: Error during encoder startup		
	Response: Output stage inhibit	
	Cause	Measure
	Error during encoder start-up.	Switch the device off, check the connection of the encoder, and switch the device on again.

Error: 13.26 (0D1Ahex | 3354dec) Description: Digital motor integration – critical error		
	Response: Encoder 1 – latest critical error	
	Cause	Measure
	The encoder of the digital motor integration has detected an error. The exact cause of the fault is displayed in the fault status of the subslave.	– Check for EMC-compliant installation. – Replace the encoder.

33955948/EN – 05/2026

Error: 13.27 (0D1Bhex | 3355dec) Description: Digital motor integration – error		
	Response: Encoder 1 – latest error	
	Cause	Measure
	The encoder of the digital motor integration has detected an error. The exact cause of the fault is displayed in the fault status of the subslave.	– Check for EMC-compliant installation. – Replace the encoder.

Error: 13.28 (0D1Chex | 3356dec) Description: Digital motor integration – warning	
Response: Encoder – warning	
Cause	Measure
The encoder of the digital motor integration has signaled a warning. The exact cause is displayed in the status of the subslave.	Check for EMC-compliant installation.

Error: 13.29 (0D1Dhex | 3357dec) Description: Absolute position invalid	
Response: Encoder 1 – latest error	
Cause	Measure
A diagnostics error was detected while evaluating the absolute encoder position. Referencing has been canceled.	– Reference the drive again. – If the error occurs repeatedly, contact SEW-EURODRIVE Service. Note that in the manual mode "emergency mode", you can move the drive using the motor encoder even if the external position encoder is faulty.

13.8.12 Fault 16 Startup

Error: 16.01 (1001hex | 4097dec) Description: Writing motor parameters with active FCB 25	
Response: Output stage inhibit	
Cause	Measure
A motor parameter has been written while FCB 25 is still active.	Deactivate FCB 25.

Error: 16.02 (1002hex | 4098dec) Description: Cannot calculate controller parameters	
Response: Output stage inhibit	
Cause	Measure
The long dead time of the encoder used prevents the calculation of the required filter coefficients.	Use an encoder with a shorter dead time.

33955948/EN – 05/2026

Error: 16.03 (1003hex | 4099dec) Description: Thermal motor model not possible		
	Response: Output stage inhibit	
	Cause	Measure
	Starting up thermal model not yet completed or its parameterization invalid.	Perform startup again.

Error: 16.05 (1005hex | 4101dec) Description: Current limit smaller than magnetizing current of the motor		
	Response: Output stage inhibit	
	Cause	Measure
	Current limit smaller than magnetizing current of motor calculated by active control mode.	Increase the current limit.

Error: 16.06 (1006hex | 4102dec) Description: Control mode not possible		
	Response: Output stage inhibit	
	Cause	Measure
	Wrong control mode selected for the motor.	Choose a suitable control mode.
	When starting up a synchronous third-party motor, some control modes and drive functions are only permitted after motor parameter measurement.	Perform a motor parameter measurement using the FCB 25 drive function.

Error: 16.07 (1007hex | 4103dec) Description: PWM frequency not possible		
	Response: Output stage inhibit	
	Cause	Measure
	The set speed controller sampling cycle of 1 ms is not possible with the set PWM frequency.	– Set a PWM frequency of 4, 8, or 16 kHz. or – Adjust the sampling cycle.
	The motor requires a higher PWM frequency than the inverter can provide.	Use an inverter with suitable PWM frequency.
	The ELSM® control mode can only be used with an inverter that supports PWM frequencies of 2.5, 4 or 8 kHz.	Use an inverter with suitable PWM frequency.
	The FCB 25 drive function can only be used with an inverter that supports PWM frequencies of 2.5, 4 or 8 kHz.	Use an inverter with suitable PWM frequency.
	The FCB 18 drive function can only be used with an inverter that supports PWM frequencies of 2.5, 4 or 8 kHz.	Use an inverter with suitable PWM frequency option.

33955948/EN – 05/2026

Error: 16.08 (1008hex | 4104dec) Description: Temperature sensor motor 1 – startup error		
	Response: Output stage inhibit	
	Cause	Measure
	Error taking into operation the temperature sensor of motor 1.	Check the startup parameters.

Error: 16.09 (1009hex | 4105dec) Description: Temperature sensor motor 2 – startup error		
	Response: Output stage inhibit	
	Cause	Measure
	Error taking into operation the temperature sensor of motor 2.	Check the startup parameters.

Error: 16.10 (100Ahex | 4106dec) Description: Actual position source not assigned		
	Response: Application stop + output stage inhibit	
	Cause	Measure
	In the selected drive function, an encoder is required for position control that is used as the source for calculating the actual position.	– Assign an encoder for the position control in the drive train configuration. – If no encoder is present, only use FCBs without positioning control.

Error: 16.11 (100Bhex | 4107dec) Description: Error calculating motor data		
	Response: Output stage inhibit	
	Cause	Measure
	Motor startup cannot be performed because of inconsistent motor data or wrong device configuration data.	– Check the startup. – If the error occurs repeatedly, contact SEW-EURODRIVE Service.

Error: 16.12 (100Chex | 4108dec) Description: Motor data write sequence not adhered to		
	Response: Output stage inhibit	
	Cause	Measure
	Write sequence not adhered to before writing electrical startup parameters.	Perform startup again.

33955948/EN – 05/2026

Error: 16.13 (100Dhex | 4109dec) Description: Several motor protection models active		
	Response: Output stage inhibit	
	Cause	Measure
	Several motor protection models are active in one of the thermal motor monitorings.	– Perform startup again. – If the error occurs repeatedly, contact SEW-EURODRIVE Service.

Error: 16.20 (1014hex | 4116dec) Description: Nominal speed too high or nominal frequency too low		
	Response: Output stage inhibit	
	Cause	Measure
	No plausible value could be determined when calculating the number of pole pairs from the nominal speed and nominal frequency.	– Check the settings for nominal speed and nominal frequency. – Perform startup again.

Error: 16.21 (1015hex | 4117dec) Description: Negative nominal slip determined		
	Response: Output stage inhibit	
	Cause	Measure
	Negative slip determined at startup.	– Check the settings for nominal speed and nominal frequency. – Perform startup again.

Error: 16.22 (1016hex | 4118dec) Description: Number of pole pairs cannot be determined		
	Response: Output stage inhibit	
	Cause	Measure
	It is not possible to calculate the number of pole pairs accurately from nominal frequency and nominal speed.	Enter the number of pole pairs.

Error: 16.23 (1017hex | 4119dec) Description: Plausibility check failed		
	Response: Output stage inhibit	
	Cause	Measure
	The estimated nominal power does not match the nominal power entered at startup.	– Check the entered data. – Perform startup again.

33955948/EN – 05/2026

Error: 16.24 (1018hex | 4120dec) Description: Speed controller sampling cycle not possible with PWM frequency or control mode	
Response: Application stop + output stage inhibit	
Cause	Measure
The set speed controller sampling cycle of 2 ms is not possible with the set PWM frequency.	– Set the PWM frequency to match the sampling cycle. or – Set sampling cycle to 2 ms (suitable for PWM frequency).
For ELSM® control mode, the only permitted speed controller sampling times are 1 ms and 2 ms.	Set the sampling cycle to 1 ms or 2 ms.

Error: 16.25 (1019hex | 4121dec) Description: User-defined current limit too low for standstill current	
Response: Output stage inhibit	
Cause	Measure
User-defined current limit value too low for configured standstill current.	– Increase user-defined current limit. or – Reduce standstill current.

Error: 16.26 (101Ahex | 4122dec) Description: Nominal values incomplete or not plausible	
Response: Output stage inhibit	
Cause	Measure
One or all of the following parameters are not set or are not plausible: – Nominal voltage – Nominal current – Nominal speed – Nominal torque	– Check the entered data. – Perform startup again.

Error: 16.27 (101Bhex | 4123dec) Description: Maximum current or maximum torque not plausible	
Response: Output stage inhibit	
Cause	Measure
The following parameters are not set or are not plausible: – Maximum current – Maximum torque	– Check the entered data. – Perform startup again.

33955948/EN – 05/2026

Error: 16.30 (101Ehex | 4126dec) Description: Faulty EtherCAT® EEPROM configuration state		
	Response: Warning	
	Cause	Measure
	EtherCAT®/SBusPLUS EEPROM not configured correctly.	Contact SEW-EURODRIVE Service.

Error: 16.55 (1037hex | 4151dec) Description: PID controller – source of actual value not defined		
	Response: Output stage inhibit	
	Cause	Measure
	The PID controller has been activated but the source of the actual value has not been defined yet.	Define the source of the actual value.

Error: 16.60 (103Chex | 4156dec) Description: Parameter setting for 3-wire control not valid		
	Response: Warning	
	Cause	Measure
	No 3-wire control stop terminal configured.	Set stop terminal parameters.

13.8.13 Fault 17 Internal processor error

Error: 17.07 (1107hex | 4359dec) Description: Exception error		
	Response: Output stage inhibit	
	Cause	Measure
	Internal computing error (trap) in CPU.	– Switch the device off and on again. – If the error occurs repeatedly, contact SEW-EURODRIVE Service.

Error: 17.08 (1108hex | 4360dec) Description: Non-volatile data not loaded		
	Response: Output stage inhibit System state: Fault acknowledgment with CPU reset	
	Cause	Measure
	The CPU has been restarted several times without firmware being fully initialized. The non-volatile data is not loaded, the default values remain active.	– Acknowledge the error. – Check the voltage supply. – If the error occurs repeatedly, contact SEW-EURODRIVE Service.

33955948/EN – 05/2026

13.8.14 Fault 18 Software error

Error: 18.01 (1201hex | 4609dec) Description: Error in motor management interface		
	Response: Output stage inhibit System state: Fault acknowledgment with CPU reset	
	Cause	Measure
	Error at motor management interface.	– Switch the device off and on again. – If the error occurs repeatedly, contact SEW-EURODRIVE Service.

Error: 18.03 (1203hex | 4611dec) Description: Task system – warning		
	Response: Warning	
	Cause	Measure
	Error detected while processing internal task system.	– Acknowledge the warning. – If the warning occurs repeatedly, contact SEW-EURODRIVE Service.

Error: 18.04 (1204hex | 4612dec) Description: Task system – error		
	Response: Output stage inhibit System state: Fault acknowledgment with CPU reset	
	Cause	Measure
	Error detected while processing internal task system.	– Switch the device off and on again. – If the error occurs repeatedly, contact SEW-EURODRIVE Service.

Error: 18.07 (1207hex | 4615dec) Description: Fatal software error		
	Response: Output stage inhibit System state: Fault acknowledgment with CPU reset	
	Cause	Measure
	Fatal software error.	– Switch the device off and on again. – If the error occurs repeatedly, contact SEW-EURODRIVE Service.

Error: 18.08 (1208hex | 4616dec) Description: Invalid error code		
	Response: Output stage inhibit	
	Cause	Measure
	Invalid error code requested.	– Switch the device off and on again. – If the error occurs repeatedly, contact SEW-EURODRIVE Service.

Error: 18.09 (1209hex | 4617dec) Description: Internal software error		
	Response: Output stage inhibit System state: Fault acknowledgment with CPU reset	
	Cause	Measure
	The software signaled an unexpected event.	– Switch the device off and on again. – If the error occurs repeatedly, contact SEW-EURODRIVE Service.

Error: 18.10 (120Ahex | 4618dec) Description: Watchdog error		
	Response: Output stage inhibit	
	Cause	Measure
	The watchdog has detected an error. The software is not operating within the intended cycle time.	– Switch the device off and on again. – If the error occurs repeatedly, contact SEW-EURODRIVE Service.

Error: 18.12 (120Chex | 4620dec) Description: Configuration data faulty		
	Response: Output stage inhibit	
	Cause	Measure
	Configuration data not plausible or cannot be interpreted by active firmware version.	– Perform a firmware update. – Contact SEW-EURODRIVE Service.

Error: 18.13 (120Dhex | 4621dec) Description: Calibration data not plausible		
	Response: Output stage inhibit	
	Cause	Measure
	Calibration data not plausible.	Contact SEW-EURODRIVE Service.

Error: 18.14 (120Ehex | 4622dec) Description: Energy management error		
	Response: Output stage inhibit System state: Fault acknowledgment with CPU reset	
	Cause	Measure
	An application that switches supply voltages (e.g. standby mode) off or on could not be stopped or started.	– Switch the device off and on again. – If the error occurs repeatedly, contact SEW-EURODRIVE Service.

33955948/EN – 05/2026

13.8.15 Fault 19 Process data

Error: 19.01 (1301hex | 4865dec) Description: Torque profile value violation		
	Response: Application stop + output stage inhibit	
	Cause	Measure
	The set torque profile values are not plausible. The torque limit may only be specified as an absolute value.	Correct the profile values.

Error: 19.02 (1302hex | 4866dec) Description: Position setpoint violation		
	Response: Application stop + output stage inhibit	
	Cause	Measure
	Position setpoint outside software limit switches.	Check the position setpoint.
	Position setpoint outside modulo positioning range.	Check the position setpoint.
	Position in user unit generates number overflow in system unit.	Check position in user unit.

Error: 19.03 (1303hex | 4867dec) Description: Speed setpoint violation		
	Response: Application stop + output stage inhibit	
	Cause	Measure
	The speed setpoints in the profile value connection are not plausible. The speed limit may only be specified as an absolute value.	Correct the setpoint.

Error: 19.04 (1304hex | 4868dec) Description: Acceleration setpoint violation		
	Response: Emergency stop + output stage inhibit	
	Cause	Measure
	The acceleration setpoint in the profile value connection is not plausible. The acceleration limit may only be specified as an absolute value.	Correct the setpoint.

Error: 19.05 (1305hex | 4869dec) Description: Drive function not available		
	Response: Application stop + output stage inhibit	
	Cause	Measure
	Non-existent drive function (FCB) selected.	Enter the available FCB number.

33955948/EN – 05/2026

Error: 19.06 (1306hex | 4870dec) Description: Mass moment of inertia setpoint violation		
	Response: Emergency stop + output stage inhibit	
	Cause	Measure
	The mass moment of inertia setpoint is not plausible. The mass moment of inertia may only be specified as an absolute value.	Correct the setpoint.

Error: 19.07 (1307hex | 4871dec) Description: Referencing missing		
	Response: Application stop + output stage inhibit	
	Cause	Measure
	The activated function can only be performed with a referenced drive.	Reference the drive.

Error: 19.08 (1308hex | 4872dec) Description: Drive train changeover not allowed		
	Response: Application stop + output stage inhibit	
	Cause	Measure
	Drive train changeover requested while output stage is enabled.	Inhibit the output stage before changing to another drive train.

Error: 19.09 (1309hex | 4873dec) Description: Jerk setpoint violation		
	Response: Application stop + output stage inhibit	
	Cause	Measure
	The jerk time is not plausible. The jerk time may only be specified as an absolute value	Adjust the jerk time.

Error: 19.11 (130Bhex | 4875dec) Description: Direction of rotation reversal – signal error at enable time		
	Response: Output stage inhibit	
	Cause	Measure
	At the time of enable, the signal levels of the signals "Activate external direction of rotation reversal" and "External direction of rotation reversal reference signal" are not plausible (not inverted to each other).	Check control signal or cabling.
	A reference signal is parameterized for the external direction of rotation reversal, but no signal for activating the function.	Adapt parameterization.

33955948/EN – 05/2026

Error: 19.12 (130Chex | 4876dec) Description: Direction of rotation reversal – signal error during enable	
Response: External direction of rotation reversal	
Cause	Measure
The signal levels for activating the external direction of rotation reversal have changed for an enabled drive.	Check control signal or cabling.

13.8.16 Fault 20 Device monitoring

Error: 20.01 (1401hex | 5121dec) Description: Supply voltage error	
Response: Output stage inhibit System state: Fault acknowledgment with CPU reset	
Cause	Measure
The internal electronics supply voltage or the externally connected DC 24 V supply voltage is not within the permitted voltage range.	– Check the voltage level of the external DC 24 V supply voltage and check for correct connection. – Acknowledge the error. – If the error occurs repeatedly, contact SEW-EURODRIVE Service.
24 V power supply unit overloaded.	Check the project planning for the power demand.

Error: 20.02 (1402hex | 5122dec) Description: Supply voltage overloaded	
Response: Output stage inhibit	
Cause	Measure
The current load on the current paths of the DC 24 V supply voltage inside the device is too high. The signal outputs of the device were therefore de-energized.	– Remove all external consumers: – from the digital outputs of the basic device – from any options that may be present – from all encoder connections – from other consumers at the DC 24 V output voltage terminals – Acknowledge the error. – Reconnect the consumers with the device, one after the other, until the error message appears once again. – Connect a consumer with a lower current consumption or eliminate the short circuit.

Error: 20.07 (1407hex | 5127dec) Description: Internal hardware fault		
	Response: Output stage inhibit System state: Fault acknowledgment with CPU reset	
	Cause	Measure
	Error in device hardware.	– Acknowledge the error. – Check for EMC-compliant installation. – If the error occurs repeatedly, replace the device.

Error: 20.08 (1408hex | 5128dec) Description: Fan – warning		
	Response: Warning with self-reset	
	Cause	Measure
	Fan function impaired.	– Check fan for contamination. – If the warning occurs repeatedly, contact SEW-EURODRIVE Service.

Error: 20.09 (1409hex | 5129dec) Description: Fan – error		
	Response: Application stop + output stage inhibit	
	Cause	Measure
	Fan defective.	Contact SEW-EURODRIVE Service.

Error: 20.10 (140Ahex | 5130dec) Description: Fan – supply voltage error		
	Response: Emergency stop + output stage inhibit	
	Cause	Measure
	Supply voltage of fan missing.	Contact SEW-EURODRIVE Service.

Error: 20.11 (140Bhex | 5131dec) Description: STO – diagnostics		
	Response: Output stage inhibit	
	Cause	Measure
	Only for devices with SIL3-STO (inputs F-STO_P1 and F-STO_P2 available): A switching delay has occurred between the signals.	– Check the STO wiring. – Make sure that both STO signals F-STO_P1 and F-STO_P2 are switched simultaneously. – Make sure that both STO signals F-STO_P1 and F-STO_P2 are switched to low level. Then acknowledge the error.
	The state change of the STO signal(s) is too slow.	Ensure steeper switching edge.
	An internal defect has occurred in the STO circuit.	Contact SEW-EURODRIVE Service.

33955948/EN – 05/2026

Error: 20.21 (1415hex | 5141dec) Description: External 24 V backup voltage missing		
	Response: Output stage inhibit System state: Fault acknowledgment with CPU reset	
	Cause	Measure
	In the current configuration, the device is only fully functional with external backup voltage.	Connect backup voltage and energize.

Error: 20.23 (1417hex | 5143dec) Description: Temperature detection in power section faulty		
	Response: Output stage inhibit	
	Cause	Measure
	Error in device hardware. Power section does not provide temperature data.	– Acknowledge the error. – Contact SEW-EURODRIVE Service.

13.8.17 Fault 21 Digital motor integration 1

Error: 21.01 (1501hex | 5377dec) Description: Communication error		
	Response: Output stage inhibit	
	Cause	Measure
	Communication error at interface of digital motor integration.	Check the cabling.

Error: 21.02 (1502hex | 5378dec) Description: Slave required		
	Response: Digital motor integration	
	Cause	Measure
	Device started up with a drive with digital motor integration but no drive with digital motor integration is connected.	– Check the connection of the digital motor integration. – Perform startup again.

Error: 21.03 (1503hex | 5379dec) Description: Incompatible drive		
	Response: Output stage inhibit	
	Cause	Measure
	The connected drive does not match the drive that was started up.	– Connect an appropriate drive. – Perform startup again.

33955948/EN – 05/2026

Error: 21.04 (1504hex | 5380dec) Description: Invalid label		
	Response: Output stage inhibit	
	Cause	Measure
	The connected drive contains invalid data.	Replace the drive.

Error: 21.05 (1505hex | 5381dec) Description: Incompatible slave		
	Response: Output stage inhibit	
	Cause	Measure
	The firmware versions of the slaves used are not compatible with one another.	Update the inverter and/or the slave.

Error: 21.06 (1506hex | 5382dec) Description: Overload/short circuit on the interface		
	Response: Output stage inhibit	
	Cause	Measure
	Short circuit in the cabling of a slave of digital motor integration.	Check the cabling of the slave.
	The voltage of the slave of digital motor integration is too low.	Check the permitted cable length.

Error: 21.07 (1507hex | 5383dec) Description: High current demand of slave		
	Response: Output stage inhibit	
	Cause	Measure
	The current consumption of the slave is too high.	Use a slave with lower current consumption.

Error: 21.08 (1508hex | 5384dec) Description: Parameter error		
	Response: Output stage inhibit	
	Cause	Measure
	Error while processing data from slave of digital motor integration.	Repeat the process in configuration state.
	The connected drive contains invalid data.	Replace the drive.

33955948/EN – 05/2026

Error: 21.09 (1509hex | 5385dec) Description: Illegal hot plug		
	Response: Emergency stop + output stage inhibit	
	Cause	Measure
	A slave of digital motor integration was connected while the drive was enabled.	– Activate the configuration state of the inverter, e.g. by inhibiting the output stage. – Switch the inverter off and on again. – Connect the slave when it is de-energized.
	A slave of digital motor integration was connected while the inverter was in standby mode without switching off the encoder supply.	– Switch off the encoder supply in standby mode. – Connect the slave when it is de-energized.

Error: 21.10 (150Ahex | 5386dec) Description: Connection type not configured correctly		
	Response: Output stage inhibit	
	Cause	Measure
	The connection type of the connected drive cannot be determined.	Set the connection type on the drive correctly.

Error: 21.11 (150Bhex | 5387dec) Description: Illegal subslave		
	Response: Output stage inhibit	
	Cause	Measure
	The device cannot be operated with a subslave connected via digital motor integration.	Connect another subslave.

Error: 21.12 (150Chex | 5388dec) Description: Slave/subslave not accessible – error		
	Response: Emergency stop + output stage inhibit	
	Cause	Measure
	A slave/subslave of digital motor integration is in the Device Update Manager.	– Update the firmware of the slave/subslave. – If the error occurs repeatedly, contact SEW-EURODRIVE Service.

Error: 21.13 (150Dhex | 5389dec) Description: Slave/subslave not accessible – warning		
	Response: Warning	
	Cause	Measure
	A slave/subslave of digital motor integration is in the Device Update Manager.	– Update the firmware of the slave/subslave. – If the warning occurs repeatedly, contact SEW-EURODRIVE Service.

33955948/EN – 05/2026

Error: 21.14 (150Ehex | 5390dec) Description: Missing startup of the brake control		
	Response: Output stage inhibit	
	Cause	Measure
	Brake control not started up.	Start up brake control or connect another drive.

Error: 21.15 (150Fhex | 5391dec) Description: Motor temperature detection not available		
	Response: Output stage inhibit	
	Cause	Measure
	The drive does not have a motor temperature detection.	– Deactivate temperature evaluation. or – Connect a different drive.

Error: 21.20 (1514hex | 5396dec) Description: Slave – critical fault		
	Response: Output stage inhibit	
	Cause	Measure
	A slave of digital motor integration detected a critical fault.	Observe the error message of the subslave. Identify the exact cause of this error message and take the appropriate measures to eliminate the error.

Error: 21.21 (1515hex | 5397dec) Description: Slave – fault		
	Response: Emergency stop + output stage inhibit	
	Cause	Measure
	A slave of digital motor integration detected a fault.	Observe the error message of the subslave. Identify the exact cause of this error message and take the appropriate measures to eliminate the error.

Error: 21.22 (1516hex | 5398dec) Description: Slave – warning		
	Response: Warning	
	Cause	Measure
	A slave of digital motor integration signaled a warning.	Observe the warning of the subslave. Identify the exact cause of this warning and take the appropriate measures for elimination.

33955948/EN – 05/2026

13.8.18 Fault 23 Power section

Error: 23.01 (1701hex | 5889dec) Description: Warning		
	Response: Warning with self-reset	
	Cause	Measure
	Power section signaled a warning.	Observe the warning of the power section subcomponent. Identify the exact cause of this warning and take the appropriate measures to eliminate the error.

Error: 23.02 (1702hex | 5890dec) Description: Fault		
	Response: Emergency stop + output stage inhibit	
	Cause	Measure
	Power section detected an error.	Observe the error message of the power section subcomponent. Identify the exact cause of this error message and take the appropriate measures to eliminate the error.

Error: 23.03 (1703hex | 5891dec) Description: Critical error		
	Response: Output stage inhibit	
	Cause	Measure
	Power section detected critical error.	Observe the error message of the power section subcomponent. Identify the exact cause of this error message and take the appropriate measures to eliminate the error.

Error: 23.04 (1704hex | 5892dec) Description: Hardware error		
	Response: Output stage inhibit	
	Cause	Measure
	An error was detected on a component of the power section.	– Check for short circuit/ground fault at the output of the inverter. – Reduce the line capacity at the output of the inverter. – If the error occurs repeatedly, contact SEW-EURODRIVE Service.
	Error detected on switched-mode power supply.	Check the DC 24 V supply voltage.
	Error detected at the gate driver of a power semiconductor.	Contact SEW-EURODRIVE Service.

Error: 23.06 (1706hex | 5894dec) Description: Process data transfer timed out		
	Response: Emergency stop + output stage inhibit	
	Cause	Measure
	Timeout of process data transfer at the communication interface of the power section.	– Switch the device off and on again. – If the error occurs repeatedly, contact SEW-EURODRIVE Service.

Error: 23.07 (1707hex | 5895dec) Description: Parameter communication timeout		
	Response: Emergency stop + output stage inhibit	
	Cause	Measure
	Timeout in parameter communication at the communication interface of the power section.	– Switch the device off and on again. – If the error occurs repeatedly, contact SEW-EURODRIVE Service.

Error: 23.08 (1708hex | 5896dec) Description: Parameter communication error		
	Response: Emergency stop + output stage inhibit	
	Cause	Measure
	Parameter communication error detected at the communication interface of the power section.	– Switch the device off and on again. – If the error occurs repeatedly, contact SEW-EURODRIVE Service.

Error: 23.09 (1709hex | 5897dec) Description: Firmware of power section corrupt		
	Response: Output stage inhibit	
	Cause	Measure
	Failed to update firmware on power section.	– Update the firmware again. – If the error occurs repeatedly, contact SEW-EURODRIVE Service.

13.8.19 Fault 25 Parameter memory monitoring

Error: 25.01 (1901hex | 6401dec) Description: Timeout warning		
	Response: Warning with self-reset	
	Cause	Measure
	Access to memory (read/write) takes longer than expected.	No measure required. The warning will be reset automatically after completed memory access.

33955948/EN – 05/2026

Error: 25.02 (1902hex | 6402dec) Description: Non-volatile memory system — runtime error		
	Response: Output stage inhibit System state: Fault acknowledgment with CPU reset	
	Cause	Measure
	Runtime error in non-volatile memory system.	– Switch the device off and on again. – Restore delivery state. Note that doing so will reset all data in the non-volatile memory to the values at delivery. – If the error occurs repeatedly, replace the device/memory module. Contact SEW-EURODRIVE Service. – Perform basic initialization. Contact SEW-EURODRIVE Service for this purpose.

33955948/EN – 05/2026

Error: 25.06 (1906hex | 6406dec) Description: Incompatible device configuration		
	Response: Output stage inhibit	
	Cause	Measure
	The data set of another device was copied in the device, which differs in device family, power or voltage from the current device.	– Acknowledge the error through a manual error reset. To do so, under [Diagnostics] > [Status] > [Error status] in the "Manual error reset" parameter, select the "With parameter set acceptance" setting. – Restore delivery state. Note that doing so will reset all data in the non-volatile memory to the values at delivery.
	The replaceable memory module of another device that differs from the current device with regard to the device family, power, voltage or design, for example, has been inserted in the device.	– Insert the correct memory module. – Acknowledge the error through a manual error reset. To do so, under [Diagnostics] > [Status] > [Error status] in the "Manual error reset" parameter, select the "With parameter set acceptance" setting. – Restore delivery state. Note that doing so will reset all data in the non-volatile memory to the values at delivery. – Perform basic initialization. Contact SEW-EURODRIVE Service for this purpose.
	The power section has been replaced and differs in its power rating and voltage from the original power section.	– Insert the correct power section. – Acknowledge the error through a manual error reset. To do so, under [Diagnostics] > [Status] > [Error status] in the "Manual error reset" parameter, select the "With parameter set acceptance" setting. – Restore delivery state. Note that doing so will reset all data in the non-volatile memory to the values at delivery.
	Subcomponent defective.	Contact SEW-EURODRIVE Service.

Error: 25.07 (1907hex | 6407dec) Description: Non-volatile memory system – initialization error		
	Response: Output stage inhibit	
	Cause	Measure
	Initializing non-volatile memory system failed.	– Switch the device off and on again. – Restore delivery state. Note that doing so will reset all data in the non-volatile memory to the values at delivery. – If the error occurs repeatedly, contact SEW-EURODRIVE Service. – Perform basic initialization. Contact SEW-EURODRIVE Service for this purpose.

33955948/EN – 05/2026

Error: 25.10 (190Ahex | 6410dec) Description: Power section configuration data – version conflict		
	Response: Output stage inhibit	
	Cause	Measure
	Wrong version of configuration data of power section.	Contact SEW-EURODRIVE Service.

Error: 25.12 (190Chex | 6412dec) Description: Power section configuration data – CRC error		
	Response: Output stage inhibit	
	Cause	Measure
	Faulty configuration data of power section.	Contact SEW-EURODRIVE Service.

Error: 25.13 (190Dhex | 6413dec) Description: Control electronics configuration data – CRC error		
	Response: Output stage inhibit	
	Cause	Measure
	Faulty configuration data of control electronics.	Contact SEW-EURODRIVE Service.

Error: 25.14 (190Ehex | 6414dec) Description: Calibration data of power section – version conflict		
	Response: Output stage inhibit	
	Cause	Measure
	Wrong version of calibration data of power section.	Contact SEW-EURODRIVE Service.

Error: 25.15 (190Fhex | 6415dec) Description: Calibration data of control electronics – version conflict		
	Response: Output stage inhibit	
	Cause	Measure
	Wrong version of calibration data of control electronics.	Contact SEW-EURODRIVE Service.

Error: 25.16 (1910hex | 6416dec) Description: Calibration data of power section – CRC error		
	Response: Output stage inhibit	
	Cause	Measure
	Faulty calibration data of power section.	Contact SEW-EURODRIVE Service.

33955948/EN – 05/2026

Error: 25.17 (1911hex | 6417dec) Description: Calibration data of control electronics – CRC error		
	Response: Output stage inhibit	
	Cause	Measure
	Faulty calibration data of control electronics.	Contact SEW-EURODRIVE Service.

Error: 25.18 (1912hex | 6418dec) Description: QA data power section – CRC error		
	Response: Warning	
	Cause	Measure
	Faulty quality assurance data of power section.	Contact SEW-EURODRIVE Service.

Error: 25.19 (1913hex | 6419dec) Description: QA data control electronics – CRC error		
	Response: Warning	
	Cause	Measure
	Faulty quality assurance data of control electronics.	Contact SEW-EURODRIVE Service.

Error: 25.20 (1914hex | 6420dec) Description: Basic memory – initialization error		
	Response: Output stage inhibit	
	Cause	Measure
	Initialization of basic device memory failed.	Contact SEW-EURODRIVE Service.

Error: 25.21 (1915hex | 6421dec) Description: Basic unit memory – runtime error		
	Response: Emergency stop + output stage inhibit	
	Cause	Measure
	Runtime error detected in the basic device memory.	Contact SEW-EURODRIVE Service.

Error: 25.30 (191Ehex | 6430dec) Description: Replaceable memory module – initialization error		
	Response: Output stage inhibit	
	Cause	Measure
	The formatting of the replaceable memory module does not match.	– Switch the device off and on again. – Restore delivery state. Note that doing so will reset all data in the replaceable memory module to the values at delivery.
	Initialization of replaceable memory module failed after restoring delivery state.	– Contact SEW-EURODRIVE Service. – Perform basic initialization. Contact SEW-EURODRIVE Service for this purpose.

33955948/EN – 05/2026

Error: 25.31 (191Fhex | 6431dec) Description: Replaceable memory module – runtime error		
	Response: Emergency stop + output stage inhibit	
	Cause	Measure
	Runtime error detected in replaceable memory module.	– Insert new memory module and perform startup again. – If the error occurs repeatedly, contact SEW-EURODRIVE Service.

Error: 25.32 (1920hex | 6432dec) Description: Incompatible replaceable memory module	
	Response: Output stage inhibit System state: Fault acknowledgment with CPU reset
Cause	Measure
The replaceable memory module is not compatible with the device.	Replace the memory module.

Error: 25.33 (1921hex | 6433dec) Description: Replaceable memory module – incompatible device category	
	Response: Output stage inhibit
Cause	Measure
The replaceable memory module is formatted, but it contains data from a device of a different equipment category. The data is not compatible and cannot be used.	– Replace the memory module. – Restore delivery state. Note that doing so will reset all data in the replaceable memory module to the values at delivery.

Error: 25.50 (1932hex | 6450dec) Description: Replaceable memory module of safety option – runtime error	
	Response: Output stage inhibit System state: Fault acknowledgment with CPU reset
Cause	Measure
Runtime error detected in the replaceable memory module of the safety option.	Contact SEW-EURODRIVE Service.

Error: 25.51 (1933hex | 6451dec) Description: Replaceable memory module of safety option – initialization error	
	Response: Warning
Cause	Measure
Initialization of the replaceable memory module of the safety option failed.	Contact SEW-EURODRIVE Service.

33955948/EN – 05/2026

Error: 25.61 (193Dhex | 6461dec) Description: Restore point – failure		
	Response: Emergency stop + output stage inhibit	
	Cause	Measure
	Failed to create restore point.	Create the restore point again.

Error: 25.70 (1946hex | 6470dec) Description: Incompatible card configuration		
	Response: Emergency stop + output stage inhibit	
	Cause	Measure
	The current configuration of the cards does not match the configuration state saved during start-up. For example, a card was removed that was still present during startup.	– Restore the original configuration of the cards. – Acknowledge the error through a manual error reset. To do so, under [Diagnostics] > [Status] > [Error status] in the "Manual error reset" parameter, select the "With parameter set acceptance" setting.

13.8.20 Fault 26 External fault

Error: 26.01 (1A01hex | 6657dec) Description: External fault via digital input/control bit		
	Response: External fault	
	Cause	Measure
	An error was triggered via a digital input or a bit of a control word.	– Eliminate the external fault. or – Change the response to an external fault under [Functions] > [Setpoints] > [Basic settings].

Error: 26.03 (1A03hex | 6659dec) Description: Power section emergency shutdown		
	Response: Output stage inhibit	
	Cause	Measure
	Power section detected critical error and requested external emergency shutdown.	Contact SEW-EURODRIVE Service.

33955948/EN – 05/2026

Error: 26.04 (1A04hex | 6660dec) Description: Error while monitoring temperature of external braking resistor		
	Response: Error response to external braking resistor error	
	Cause	Measure
	The connected temperature switch of the external braking resistor has tripped.	– Check the mounting position of the braking resistor. – Clean the braking resistor. – Check the configuration of the braking resistor. – Install a larger braking resistor. – Check the external trip switch settings. – Optimize the travel cycle so that less regenerative energy is created. – Check the settings of the storage unit discharge function in the affected MOVIKIT® software module. – Check plug-in connections.

13.8.21 Fault 28 FCB drive functions

Error: 28.01 (1C01hex | 7169dec) Description: FCB 11/12 – Searching zero pulse timeout		
	Response: Emergency stop + output stage inhibit	
	Cause	Measure
	Failed to find zero pulse of encoder's C track within specified search time during reference travel.	Check the encoder wiring.

Error: 28.02 (1C02hex | 7170dec) Description: FCB 11/12 – Hardware limit switch before reference cam		
	Response: Emergency stop + output stage inhibit	
	Cause	Measure
	The hardware limit switch was reached during reference travel. The reference cam was not detected.	Make sure that the reference cam is not installed behind the hardware limit switch.

Error: 28.03 (1C03hex | 7171dec) Description: FCB 11/12 – Hardware limit switch and reference cam not flush		
	Response: Emergency stop + output stage inhibit	
	Cause	Measure
	Hardware limit switch and reference cam not mounted flush.	Make sure that reference cam and hardware limit switch are installed so they overlap.

33955948/EN – 05/2026

Error: 28.04 (1C04hex | 7172dec) Description: FCB 11/12 – Faulty reference offset		
	Response: Emergency stop + output stage inhibit	
	Cause	Measure
	Error determining reference offset.	– Make sure that the reference offset is smaller than the "Modulo maximum" limit value. – When using a single-turn absolute encoder, make sure that the reference offset is not larger than one encoder revolution. – Make sure that an encoder has been set as the source of the actual position when assigning the encoder.

Error: 28.05 (1C05hex | 7173dec) Description: FCB 11/12 – Referencing not possible		
	Response: Emergency stop + output stage inhibit	
	Cause	Measure
	In the active drive train during encoder assignment, no encoder was specified as the source of the actual position.	– Set an encoder as the source of the actual position. – Activate the "Referencing all encoders of the drive train" parameter.
	The reference travel type "Absolute encoder position" is only permitted for absolute encoders in the position mode "Linear mode" or "Single-turn absolute position".	– Adjust the position mode of the encoder. – Use a different reference travel type
	No encoder is assigned in the active drive train.	Assign encoder.

Error: 28.06 (1C06hex | 7174dec) Description: FCB 11/12 – Limit switch/reference cam not flush/overlapping with fixed stop		
	Response: Emergency stop + output stage inhibit	
	Cause	Measure
	A hardware limit switch and a reference cam was hit at the same time during reference travel to fixed stop.	Check whether the position of hardware limit switches and reference cams for reference travel have been set correctly.
	During reference travel to fixed stop and active speed changeover at hardware limit switch or reference cam, the fixed stop has been reached without the hardware limit switch or reference cam being hit.	Check whether the position of hardware limit switches and reference cams for reference travel have been set correctly.

33955948/EN – 05/2026

Error: 28.07 (1C07hex | 7175dec) Description: FCB 21 – Required total torque too high		
	Response: Output stage inhibit	
	Cause	Measure
	The required total torque is greater than the permitted maximum torque at the motor shaft. The total torque is calculated from the torque specification and the determined/specified load torque.	– Reduce the torque specification. – Change the direction of rotation. – Increase the power of the drive.

Error: 28.08 (1C08hex | 7176dec) Description: FCB 21 – Total torque not reached		
	Response: Output stage inhibit	
	Cause	Measure
	The required total torque (at least 90%) was not reached. The total torque is calculated from the torque specification and the determined/specified load torque.	– Reduce the torque specification. – Check the limit values of the inverter. – Check the motor connection.

Error: 28.09 (1C09hex | 7177dec) Description: FCB 18 – Rotor position identification not possible		
	Response: Output stage inhibit	
	Cause	Measure
	Rotor position identification with an incremental encoder was aborted.	– Restart the rotor position identification. – Check whether the encoder is connected correctly. – Check whether the encoder is defective.
	Result of rotor position identification (measured encoder offset) cannot be stored in encoder.	Store the measured encoder offset in the inverter
	In the "Automatic" operating mode, the result of rotor position identification (measured encoder offset) cannot be stored in the encoder. In this operating mode, the measured value can only be stored in the inverter	– Set the operating mode to "Manual". or – Store the measured encoder offset in the inverter.

Error: 28.10 (1C0Ahex | 7178dec) Description: FCB 25 – Unbalanced motor phases		
	Response: Output stage inhibit	
	Cause	Measure
	Significantly different values determined in the three phases while measuring stator resistances.	– Check whether the motor is connected correctly. – Check all contact points on the motor and inverter. – Check the motor and motor cable for damage.

Error: 28.11 (1C0Bhex | 7179dec) Description: FCB 25 – High impedance motor phase		
	Response: Output stage inhibit	
	Cause	Measure
	At least one motor phase could not be measured during motor parameter measurement.	– Check whether the motor is connected correctly. – Check all contact points on the motor and inverter. – Check the motor and motor cable for damage.

Error: 28.12 (1C0Chex | 7180dec) Description: FCB 25 – Stator resistance measurement timeout		
	Response: Output stage inhibit	
	Cause	Measure
	Motor parameter measurement activated while motor is turning.	– Stop motor. – Start motor parameter measurement when the motor is at standstill.

Error: 28.13 (1C0Dhex | 7181dec) Description: FCB 25 – Characteristic curve identification not possible		
	Response: Output stage inhibit	
	Cause	Measure
	The characteristic curve cannot be clearly identified by the motor parameter measurement.	Contact SEW-EURODRIVE Service.

Error: 28.14 (1C0Ehex | 7182dec) Description: Modulo minimum and modulo maximum not plausible		
	Response: Emergency stop + output stage inhibit	
	Cause	Measure
	The value of the "Modulo minimum" parameter is greater than the value of the "Modulo maximum" parameter.	Correct the parameter values.

Error: 28.15 (1C0Fhex | 7183dec) Description: FCB 25 – Timeout		
	Response: Output stage inhibit	
	Cause	Measure
	Measuring of rotor resistance, leakage inductance, and stator inductance not completed.	Contact SEW-EURODRIVE Service.

33955948/EN – 05/2026

Error: 28.17 (1C11hex | 7185dec) Description: FCB only possible for drive train 1		
	Response: Output stage inhibit	
	Cause	Measure
	The activate FCB can only be operated if drive train 1 is set as the active drive train.	Select drive train 1 as the active drive train.

Error: 28.18 (1C12hex | 7186dec) Description: FCB 21 – Brake missing		
	Response: Application stop + output stage inhibit	
	Cause	Measure
	No brake has been parameterized in the inverter. However, a brake is required to perform the brake test.	– Parameterize the brake in drive train 1. – Start FCB 21 again.

Error: 28.19 (1C13hex | 7187dec) Description: FCB 21 – Encoder missing		
	Response: Application stop + output stage inhibit	
	Cause	Measure
	No encoder has been parameterized in the inverter. However, an encoder is required to detect a movement of the drive.	– Parameterize the encoder in drive train 1. – Use an encoder for speed control or position control. – Start FCB 21 again.

Error: 28.20 (1C14hex | 7188dec) Description: FCB 21 – Load torque not within tolerance range		
	Response: Application stop + output stage inhibit	
	Cause	Measure
	The measured load torque is outside the permitted range. The permitted range is defined by the "Load torque" and "Permitted load torque tolerance" parameters as follows: Load torque ± permitted load torque tolerance	– Check the load torque of the system. – Check the "Load torque" parameter value. – Check the "Permitted load torque tolerance" parameter value.

Error: 28.21 (1C15hex | 7189dec) Description: FCB 09 – Position overshoot through changes to the active travel job		
	Response: Application stop + output stage inhibit	
	Cause	Measure
	Due to changing of the target position or profile values during an active travel order, the drive must travel beyond the target and then reverse to adhere to the profile. Reversing is prohibited in the current operating mode, so when the target position is overrun, the drive triggers a fault and stops in the permitted direction.	Change the target position/profile values in such a way that it is still possible to stop at the target position.

Error: 28.22 (1C16hex | 7190dec) Description: FCB 09 – Wrong Touchprobe data source		
	Response: Application stop + output stage inhibit	
	Cause	Measure
	For the "Remaining distance from Touchprobe 1" operating mode, the data source of the Touchprobe used must be set to "Actual position in user unit".	Change the data source of the Touchprobe.

Error: 28.23 (1C17hex | 7191dec) Description: Minimum speed too high		
	Response: Output stage inhibit	
	Cause	Measure
	Minimum speed greater than application limit of the speed.	– Reduce the minimum speed. or – Increase the application limit.

Error: 28.24 (1C18hex | 7192dec) Description: FCB 05 – Limits of skip range outside setpoint limits		
	Response: Output stage inhibit	
	Cause	Measure
	The speed range of the active speed resonance skip function is larger than the permitted setpoint range. Both the minimum speed and the application limit are within the skip range. As such, each setpoint falls within the skip range.	– Adjust the range of the speed resonance skip function. – Adjust the minimum speed. – Adjust the application limit.

Error: 28.25 (1C19hex | 7193dec) Description: FCB 11/12 – Faulty reference offset of encoder 1		
	Response: Emergency stop + output stage inhibit	
	Cause	Measure
	Error determining reference offset for encoder 1.	– Make sure that the reference offset is smaller than the "Modulo maximum" limit value. – When using a single-turn absolute encoder, make sure that the reference offset is not larger than one encoder revolution.

Error: 28.27 (1C1Bhex | 7195dec) Description: FCB 11/12 – Reference cams and hardware limit switches active		
	Response: Emergency stop + output stage inhibit	
	Cause	Measure
	During reference travel, the hardware limit switch was hit when the reference cam was active.	– Check the position of the reference cam to the hardware limit switch. – Check the signal of the reference cam.

33955948/EN – 05/2026

Error: 28.28 (1C1Chex | 7196dec) Description: FCB 11/12 – Homing not possible		
	Response: Emergency stop + output stage inhibit	
	Cause	Measure
	Position control cannot be performed with the active control mode and the active encoder setting. Homing is performed exclusively in position control.	– Parameterize the encoder as the source of the actual position. or – Deactivate the "Approach home position" parameter.

13.8.22 Fault 29 HW limit switches

Error: 29.01 (1D01hex | 7425dec) Description: Positive limit switch hit		
	Response: HW limit switches – current drive train	
	Cause	Measure
	The positive hardware limit switch was hit.	– Check the wiring of the hardware limit switch. – Check the target position. – Leave the hardware limit switch in the opposite direction.

Error: 29.02 (1D02hex | 7426dec) Description: Negative limit switch hit		
	Response: HW limit switches – current drive train	
	Cause	Measure
	The negative hardware limit switch was hit.	– Check the wiring of the hardware limit switch. – Check the target position. – Leave the hardware limit switch in the opposite direction.

Error: 29.03 (1D03hex | 7427dec) Description: Limit switch missing		
	Response: Emergency stop + output stage inhibit	
	Cause	Measure
	Positive and negative hardware limit switches hit at the same time.	– Check the wiring of the hardware limit switches. – Check the parameter setting of the digital inputs. – Check the parameter setting of the process output data.

Error: 29.04 (1D04hex | 7428dec) Description: Limit switches reversed		
	Response: Emergency stop + output stage inhibit	
	Cause	Measure
	The error can be caused as follows: – The positive hardware limit switch was hit with negative direction of rotation or – The negative hardware limit switch was hit with positive direction of rotation.	Check whether the hardware limit switch connections are swapped.

13.8.23 Fault 30 SW limit switches

Error: 30.01 (1E01hex | 7681dec) Description: Positive limit switch hit		
	Response: SW limit switches – current drive train	
	Cause	Measure
	Positive software limit switch hit.	– Check the position of the software limit switch. – Check the target position. – Leave the software limit switch in the opposite direction.

Error: 30.02 (1E02hex | 7682dec) Description: Negative limit switch hit		
	Response: SW limit switches – current drive train	
	Cause	Measure
	Negative software limit switch hit.	– Check the position of the software limit switch. – Check the target position. – Leave the software limit switch in the opposite direction.

Error: 30.03 (1E03hex | 7683dec) Description: Limit switches reversed		
	Response: Emergency stop + output stage inhibit	
	Cause	Measure
	Position of negative software limit switch greater than position of positive software limit switch.	Check the positions of the software limit switches.

33955948/EN – 05/2026

Error: 30.04 (1E04hex | 7684dec) Description: Distance of software limit switches too small/noise suppression window too large		
	Response: Emergency stop + output stage inhibit	
	Cause	Measure
	The range limited by the positive and negative software limit switches is smaller than the range set in the "SW limit switch noise suppression window" parameter.	– Check the positions of the software limit switches. or – Adjust the width of the noise suppression window.

13.8.24 Fault 31 Thermal motor protection

Error: 31.01 (1F01hex | 7937dec) Description: Temperature sensor motor 1 – wire break	
Response: Application stop + output stage inhibit	
Cause	Measure
Wire break detected at the temperature sensor of the motor.	Check the wiring of the temperature sensor.

Error: 31.02 (1F02hex | 7938dec) Description: Temperature sensor motor 1 – short circuit	
Response: Application stop + output stage inhibit	
Cause	Measure
Short circuit at temperature sensor of motor.	Check the wiring of the temperature sensor.

Error: 31.03 (1F03hex | 7939dec) Description: Temperature sensor motor 1 – overtemperature	
Response: Output stage inhibit	
Cause	Measure
The motor temperature determined by the temperature sensor exceeds the maximum permitted motor temperature.	– Let the motor cool down. – Check the motor for overload. – Check whether the correct temperature sensor has been configured.

Error: 31.04 (1F04hex | 7940dec) Description: Temperature model motor 1 – overtemperature	
Response: Output stage inhibit	
Cause	Measure
The motor temperature determined by the temperature model exceeds the maximum permitted motor temperature.	– Let the motor cool down. – Check the motor for overload. – Check whether the correct temperature sensor has been configured.

Error: 31.05 (1F05hex | 7941dec) Description: Temperature sensor motor 1 – prewarning		
	Response: Thermal motor protection 1 – prewarning threshold	
	Cause	Measure
	Motor temperature determined via temperature sensor exceeded prewarning threshold.	Check the motor for overload.

Error: 31.06 (1F06hex | 7942dec) Description: Temperature model motor 1 – prewarning		
	Response: Thermal motor protection 1 – prewarning threshold	
	Cause	Measure
	Motor temperature determined via motor model exceeded prewarning threshold.	Check the motor for overload.

Error: 31.07 (1F07hex | 7943dec) Description: UL temperature model – overtemperature		
	Response: Output stage inhibit	
	Cause	Measure
	The temperature of the active motor determined via the UL temperature model exceeds the maximum permitted motor temperature.	Check the motor for overload.

Error: 31.08 (1F08hex | 7944dec) Description: Temperature sensor motor 1 – communication timeout		
	Response: Output stage inhibit	
	Cause	Measure
	Communication with temperature sensor is disrupted (e.g. via MOVILINK® DDI).	Check the wiring of the temperature sensor.

Error: 31.09 (1F09hex | 7945dec) Description: Temperature sensor motor 1 – temperature too low		
	Response: Output stage inhibit	
	Cause	Measure
	Temperature detected by temperature sensor of fell below -50 °C.	– Check whether the correct temperature sensor has been configured. – Heat the motor.
	Short circuit in the long connection to the temperature sensor of the motor.	Check the wiring of the temperature sensor.

33955948/EN – 05/2026

Error: 31.11 (1F0Bhex | 7947dec) Description: Temperature sensor motor 2 – wire break		
	Response: Application stop + output stage inhibit	
	Cause	Measure
	Wire break detected at the temperature sensor of the motor.	Check the wiring of the temperature sensor.

Error: 31.12 (1F0Chex | 7948dec) Description: Temperature sensor motor 2 – short circuit		
	Response: Application stop + output stage inhibit	
	Cause	Measure
	Short circuit at temperature sensor of motor.	Check the wiring of the temperature sensor.

Error: 31.13 (1F0Dhex | 7949dec) Description: Temperature sensor motor 2 – overtemperature		
	Response: Output stage inhibit	
	Cause	Measure
	The motor temperature determined by the temperature sensor exceeds the maximum permitted motor temperature.	– Let the motor cool down. – Check the motor for overload. – Check whether the correct temperature sensor has been configured.

Error: 31.14 (1F0Ehex | 7950dec) Description: Temperature model motor 2 – overtemperature		
	Response: Output stage inhibit	
	Cause	Measure
	The motor temperature determined by the temperature model exceeds the maximum permitted motor temperature.	– Let the motor cool down. – Check the motor for overload. – Check whether the correct temperature sensor has been configured.

Error: 31.15 (1F0Fhex | 7951dec) Description: Temperature sensor motor 2 – prewarning		
	Response: Thermal motor protection 2 – prewarning threshold	
	Cause	Measure
	Motor temperature determined via temperature sensor exceeded prewarning threshold.	Check the motor for overload.

Error: 31.16 (1F10hex | 7952dec) Description: Temperature model motor 2 – prewarning		
	Response: Thermal motor protection 2 – prewarning threshold	
	Cause	Measure
	Motor temperature determined via motor model exceeded prewarning threshold.	Check the motor for overload.

Error: 31.18 (1F12hex | 7954dec) Description: Temperature sensor motor 2 – communication timeout		
	Response: Output stage inhibit	
	Cause	Measure
	Communication with temperature sensor is disrupted (e.g. via MOVILINK® DDI).	Check the wiring of the temperature sensor.

Error: 31.19 (1F13hex | 7955dec) Description: Temperature sensor motor 2 – temperature too low		
	Response: Output stage inhibit	
	Cause	Measure
	Temperature detected by temperature sensor of fell below -50 °C.	– Check whether the correct temperature sensor has been configured. – Heat the motor.
	Short circuit in the long connection to the temperature sensor of the motor.	Check the wiring of the temperature sensor.

Error: 31.50 (1F32hex | 7986dec) Description: Error at temperature sensor 1		
	Response: Output stage inhibit	
	Cause	Measure
	Error detected at temperature sensor 1 of the motor.	Observe the error code of the main component. Identify the exact cause of this error message and take the appropriate measures to eliminate the error.

Error: 31.51 (1F33hex | 7987dec) Description: Error at temperature sensor 2		
	Response: Output stage inhibit	
	Cause	Measure
	Error detected at temperature sensor 2 of the motor.	Observe the error code of the main component. Identify the exact cause of this error message and take the appropriate measures to eliminate the error.

Error: 31.52 (1F34hex | 7988dec) Description: Error at temperature sensor 3		
	Response: Output stage inhibit	
	Cause	Measure
	Error detected at temperature sensor 3 of the motor.	Observe the error code of the main component. Identify the exact cause of this error message and take the appropriate measures to eliminate the error.

33955948/EN – 05/2026

Error: 31.53 (1F35hex | 7989dec) Description: Unknown thermal motor protection model		
	Response: Output stage inhibit	
	Cause	Measure
	A motor protection model that is not supported by the firmware has been set in the parameterization.	– Perform firmware update and startup again via DMI label. – Update the firmware and download the parameter set again. – Adjust the parameterization (without the unknown motor protection model).

13.8.25 Fault 32 Communication

Error: 32.01 (2001hex | 8193dec) Description: CBus communication timeout		
	Response: Fieldbus – timeout response	
	Cause	Measure
	A timeout occurred in the process data transfer during communication via the CBus communication option.	– Check the wiring of the system bus. – Make sure that the communication option is set correctly. – Check the set timeout time of the CBus communication option.

Error: 32.02 (2002hex | 8194dec) Description: EtherCAT®/SBusPLUS communication timeout		
	Response: Fieldbus – timeout response	
	Cause	Measure
	Timeout in process data transfer during EtherCAT®/SBusPLUS communication.	– Check the wiring of system bus and module bus. – Make sure that the EtherCAT®/SBusPLUS configuration in the controller is set correctly. – Check the set timeout time of the EtherCAT®/SBusPLUS interface.

Error: 32.03 (2003hex | 8195dec) Description: Faulty synchronization signal		
	Response: External synchronization	
	Cause	Measure
	Synchronization signal period is not correct.	Make sure that the EtherCAT®/SBusPLUS configuration in the controller is set correctly.

Error: 32.04 (2004hex | 8196dec) Description: Missing synchronization signal		
	Response: External synchronization	
	Cause	Measure
	No synchronization signal present.	Make sure that the EtherCAT®/SBusPLUS configuration in the controller is set correctly.

Error: 32.05 (2005hex | 8197dec) Description: Synchronization timeout		
	Response: External synchronization	
	Cause	Measure
	Timeout while synchronizing to synchronization signal.	Make sure that the EtherCAT®/SBusPLUS configuration in the controller is set correctly.

Error: 32.06 (2006hex | 8198dec) Description: Error while transferring parameter set		
	Response: Output stage inhibit	
	Cause	Measure
	Error while downloading parameter set to device.	– Check the wiring of system bus and module bus. – Restart the transfer.

Error: 32.07 (2007hex | 8199dec) Description: Application heartbeat timeout		
	Response: Application heartbeat – timeout response	
	Cause	Measure
	Communication between the application program (e.g. IEC program or MOVIKIT® from the Drive category) and the device was interrupted.	– Check the status of the application program. – Restart the application program.

Error: 32.08 (2008hex | 8200dec) Description: User-timeout timeout		
	Response: User timeout – timeout response	
	Cause	Measure
	The timeout time of the user timeout function has expired.	– Check communication. – If the error occurs repeatedly, contact SEW-EURODRIVE Service.

33955948/EN – 05/2026

Error: 32.12 (200Chex | 8204dec) Description: Manual mode timeout		
	Response: Manual mode – timeout response	
	Cause	Measure
	Communication connection to inverter interrupted in manual mode.	– Check whether too many programs are open on the engineering PC. – Increase the timeout time in manual mode.
	New Scope project created.	– Acknowledge the error. – Restart manual mode.
	Scope measurement transferred from inverter to project.	– Acknowledge the error. – Restart manual mode.

13.8.26 Fault 33 System initialization

Error: 33.01 (2101hex | 8449dec) Description: Error during offset determination of current measurement	
Response: Output stage inhibit System state: Fault acknowledgment with CPU reset	
Cause	Measure
Error detected during current measurement.	Contact SEW-EURODRIVE Service.

Error: 33.02 (2102hex | 8450dec) Description: Firmware – checksum error	
Response: Output stage inhibit System state: Fault acknowledgment with CPU reset	
Cause	Measure
Error calculating firmware checksum.	Contact SEW-EURODRIVE Service.

Error: 33.06 (2106hex | 8454dec) Description: Faulty FPGA configuration	
Response: Output stage inhibit	
Cause	Measure
Error in FPGA configuration.	Contact SEW-EURODRIVE Service.

Error: 33.07 (2107hex | 8455dec) Description: Function block compatibility error	
Response: Output stage inhibit	
Cause	Measure
Error checking compatibility of function block.	Contact SEW-EURODRIVE Service.

33955948/EN – 05/2026

Error: 33.08 (2108hex | 8456dec) Description: Software function block not configured correctly		
	Response: Output stage inhibit	
	Cause	Measure
	Error detected in the configuration of the software function block.	Contact SEW-EURODRIVE Service.

Error: 33.09 (2109hex | 8457dec) Description: Hardware compatibility error of the power section		
	Response: Output stage inhibit	
	Cause	Measure
	The firmware is not compatible with the hardware of the power section.	Contact SEW-EURODRIVE Service.

Error: 33.10 (210Ahex | 8458dec) Description: Boot timeout		
	Response: Output stage inhibit System state: Fault acknowledgment with CPU reset	
	Cause	Measure
	Timeout during system boot.	Contact SEW-EURODRIVE Service.

Error: 33.11 (210Bhex | 8459dec) Description: Hardware compatibility error		
	Response: Output stage inhibit	
	Cause	Measure
	The firmware is not compatible with the device.	Contact SEW-EURODRIVE Service.

Error: 33.12 (210Chex | 8460dec) Description: Memory module plugged		
	Response: Output stage inhibit System state: Fault acknowledgment with CPU reset	
	Cause	Measure
	A plugged-in memory module was detected during device start. However, the internal memory was set as the storage location.	Switch off the device. Remove the memory module and restart the device.

33955948/EN – 05/2026

Error: 33.13 (210Dhex | 8461dec) Description: Memory module removed		
	Response: Output stage inhibit System state: Fault acknowledgment with CPU reset	
	Cause	Measure
	Memory module removed from device parameterized for operation with replaceable memory module.	Switch off the device, insert the memory module, and switch on the device again.
	Replaceable memory module removed during ongoing operation.	Switch off the device, insert the memory module, and switch on the device again.
	Memory module missing for a device that can only be operated with replaceable memory module.	Switch off the device, insert the memory module, and switch on the device again.

Error: 33.14 (210Ehex | 8462dec) Description: EtherCAT® slave controller cannot be accessed		
	Response: Output stage inhibit System state: Fault acknowledgment with CPU reset	
	Cause	Measure
	EtherCAT® slave controller cannot be accessed.	Contact SEW-EURODRIVE Service.

Error: 33.15 (210Fhex | 8463dec) Description: Firmware configuration conflict in the Device Update Manager		
	Response: Output stage inhibit System state: Fault acknowledgment with CPU reset	
	Cause	Measure
	The firmware does not correspond with the expected configuration in the Device Update Manager.	– Acknowledge the error. Doing so will update the configuration data of the Device Update Manager. – If the error occurs again after a reset, contact SEW-EURODRIVE Service

Error: 33.18 (2112hex | 8466dec) Description: Incompatible fieldbus configuration		
	Response: Output stage inhibit System state: Fault acknowledgment with CPU reset	
	Cause	Measure
	The fieldbus used is not compatible with the basic unit.	– For devices with a pluggable fieldbus card, replace the card. – If the error occurs repeatedly, contact SEW-EURODRIVE Service.

Error: 33.22 (2116hex | 8470dec) Description: Function status too low		
	Response: Output stage inhibit	
	Cause	Measure
	The parameter set to be loaded into the device requires a higher function status.	– Perform a firmware update. – Use a parameter set that matches the device. – Acknowledge the error with parameter set acceptance. This applies the data and overwrites the parameter set in the device with a lower function status.
	The parameter set in the replaceable memory module requires a higher function status.	– Perform a firmware update. – Use a memory module with a parameter set that matches the device. – Acknowledge the error with parameter set acceptance. This applies the data and overwrites the replaceable memory module with a lower function status.

13.8.27 Fault 34 Process data configuration

Error: 34.01 (2201hex | 8705dec) Description: Changed process data configuration		
	Response: Application stop + output stage inhibit	
	Cause	Measure
	Process data configuration changed during active process data operation.	Perform a reset. Doing so will stop the process data, apply the changes, and restart the process data.

13.8.28 Fault 35 Function activation

Error: 35.01 (2301hex | 8961dec) Description: Activation level – invalid activation key		
	Response: Emergency stop + output stage inhibit	
	Cause	Measure
	Activation key not entered properly.	Enter the activation key again.
	Activation key not created for this device.	Check the activation key.
	For a double-axis, the activation key of the wrong instance was entered in the device.	Enter the activation key for the assigned instance.
	Activation key entered for technology level in parameter "Application level – activation key".	Enter the activation key in the correct parameter.

33955948/EN – 05/2026

Error: 35.02 (2302hex | 8962dec) Description: Application level too low		
	Response: Emergency stop + output stage inhibit	
	Cause	Measure
	The activated software module requires a higher application level.	Determine the required application level ("Application level – required level" parameter) and enter its activation key.

Error: 35.03 (2303hex | 8963dec) Description: Technology level too low		
	Response: Emergency stop + output stage inhibit	
	Cause	Measure
	An activated technology function requires a higher technology level.	Determine the required technology level ("Technology level – required level" parameter) and enter its activation key.

Error: 35.04 (2304hex | 8964dec) Description: Technology level – invalid activation key		
	Response: Emergency stop + output stage inhibit	
	Cause	Measure
	Activation key not entered properly.	Enter the activation key again.
	Activation key not created for this device.	Check the activation key.
	For a double-axis, the activation key of the wrong instance was entered in the device.	Enter the activation key for the assigned instance.
	Activation key entered for application level in parameter "Technology level – activation key".	Enter the activation key in the correct parameter.

13.8.29 Fault 37 Brake control

Error: 37.01 (2501hex | 9473dec) Description: Brake control 1 – switching state not consistent		
	Response: Brake control 1 – status	
	Cause	Measure
	The switching state of the input signal "Brake control 1 – status" differs from the switching state of the brake control (DB 00/SBC).	– Check the connection and function of brake control 1. – Check whether the selected connection is compatible with brake control monitoring. – Check the connection and configuration of the input signal "Brake control 1 – status".

Error: 37.02 (2502hex | 9474dec) Description: Brake control 1 – switching frequency exceeded		
	Response: Brake control 1 – switching frequency	
	Cause	Measure
	Permitted switching frequency of brake control 1 exceeded.	– Check the application. – Check the permitted switching frequency of brake control and the limit value of monitoring.

Error: 37.03 (2503hex | 9475dec) Description: Brake control 2 – switching state not consistent		
	Response: Brake control 2 – status	
	Cause	Measure
	The switching state of the input signal "Brake control 2 – status" differs from the switching state of the brake control (DB 00/SBC).	– Check the connection and function of brake control 2. – Check whether the selected connection is compatible with brake control monitoring. – Check the connection and configuration of the input signal "Brake control 2 – status".

Error: 37.04 (2504hex | 9476dec) Description: Brake control 2 – switching frequency exceeded		
	Response: Brake control 2 – switching frequency	
	Cause	Measure
	Permitted switching frequency of brake control 2 exceeded.	– Check the application. – Check the permitted switching frequency of brake control and the limit value of monitoring.

33955948/EN – 05/2026

13.8.30 Fault 42 Lag error

Error: 42.01 (2A01hex | 10753dec) Description: Positioning lag error		
	Response: Positioning lag error	
	Cause	Measure
	Encoder not connected correctly.	Check the encoder wiring.
	Position encoder inverted or not installed correctly on the track.	Check the installation and connection of the position encoder.
	Motor phases not connected properly.	Check the wiring of the motor.
	Acceleration too high.	– Check the profile values. – Increase the torque limit and/or current limit. – Check the project planning.
	P component of position controller too small.	Increase the P component of the position controller.
	Speed controller parameterized incorrectly.	Check controller parameters.
	Lag error window too small.	Increase the lag error window.
	Mechanical components cannot move freely or are blocked.	– Check the mechanical components for stiffness. – Check the mechanical components for blockage.
	Supply voltage too low or line phase missing.	Check supply voltage.

Error: 42.02 (2A02hex | 10754dec) Description: Jog mode lag error		
	Response: Output stage inhibit	
	Cause	Measure
	Encoder not connected correctly.	Check the encoder wiring.
	Position encoder inverted or not installed correctly on the track.	Check the installation and connection of the position encoder.
	Motor phases not connected properly.	Check the wiring of the motor.
	Acceleration too high.	– Check the profile values. – Increase the torque limit and/or current limit. – Check the project planning.
	P component of position controller too small.	Increase the P component of the position controller.
	Speed controller parameterized incorrectly.	Check controller parameters.
	Lag error window too small.	Increase the lag error window.
	Mechanical components cannot move freely or are blocked.	– Check the mechanical components for stiffness. – Check the mechanical components for blockage.
	Supply voltage too low or line phase missing.	Check supply voltage.

Error: 42.03 (2A03hex | 10755dec) Description: Standard lag error		
	Response: Output stage inhibit	
	Cause	Measure
	Encoder not connected correctly.	Check the encoder wiring.
	Position encoder inverted or not installed correctly on the track.	Check the installation and connection of the position encoder.
	Motor phases not connected properly.	Check the wiring of the motor.
	Acceleration too high.	– Check the profile values. – Increase the torque limit and/or current limit. – Check the project planning.
	P component of position controller too small.	Increase the P component of the position controller.
	Speed controller parameterized incorrectly.	Check controller parameters.
	Lag error window too small.	Increase the lag error window.
	Supply voltage too low or line phase missing.	Check supply voltage.

13.8.31 Fault 44 Power section subcomponent

Error: 44.02 (2C02hex | 11266dec) Description: Overcurrent phase U		
	Response: Remote – critical error	
	Cause	Measure
	The connected motor is too large.	Connect a smaller motor.
	Acceleration too high.	Reduce the acceleration.
	A short circuit occurred.	– Remove the short circuit on the motor connection. – Check the motor phases.
	There is a problem with the output filter.	– Activate the output filter during startup of the drive train. – Check assignment of output filter and inverter.
	Output stage defective.	Contact SEW-EURODRIVE Service.

33955948/EN – 05/2026

Error: 44.03 (2C03hex | 11267dec) Description: Overcurrent phase V		
	Response: Remote – critical error	
	Cause	Measure
	The connected motor is too large.	Connect a smaller motor.
	Acceleration too high.	Reduce the acceleration.
	A short circuit occurred.	– Remove the short circuit on the motor connection. – Check the motor phases.
	There is a problem with the output filter.	– Activate the output filter during startup of the drive train. – Check assignment of output filter and inverter.
	Output stage defective.	Contact SEW-EURODRIVE Service.

Error: 44.04 (2C04hex | 11268dec) Description: Overcurrent phase W		
	Response: Remote – critical error	
	Cause	Measure
	The connected motor is too large.	Connect a smaller motor.
	Acceleration too high.	Reduce the acceleration.
	A short circuit occurred.	– Remove the short circuit on the motor connection. – Check the motor phases.
	There is a problem with the output filter.	– Activate the output filter during startup of the drive train. – Check assignment of output filter and inverter.
	Output stage defective.	Contact SEW-EURODRIVE Service.

13.8.32 Error 45 Fieldbus interface

Error: 45.01 (2D01hex | 11521dec) Description: No response from fieldbus interface		
	Response: Emergency stop + output stage inhibit	
	Cause	Measure
	Fieldbus interface does not start properly and is therefore not functional.	– Switch the device off and on again. – If the error occurs repeatedly, contact SEW-EURODRIVE Service.

Error: 45.02 (2D02hex | 11522dec) Description: Fieldbus interface – error		
	Response: Fieldbus – timeout response	
	Cause	Measure
	Error detected on device-internal connection to fieldbus interface.	– Switch the device off and on again. – If the error occurs repeatedly, contact SEW-EURODRIVE Service.

Error: 45.03 (2D03hex | 11523dec) Description: Process output data timeout		
	Response: Fieldbus – timeout response	
	Cause	Measure
	Timeout in process data transfer during fieldbus communication.	– Check the communication connection between the fieldbus master and the fieldbus interface for interruption. – Check the configuration of the fieldbus master. – Adjust the timeout monitoring of the fieldbus interface.

Error: 45.05 (2D05hex | 11525dec) Description: Engineering error		
	Response: Warning	
	Cause	Measure
	Engineering via fieldbus interface no longer works or only works to a limited extent.	– Switch the device off and on again. – Check the network load in the communication network. – Close unneeded engineering connections that are open in parallel (e.g. parameter access via managing EDGE devices, asset management tools, network scanners, etc.). – If the warning occurs repeatedly, contact SEW-EURODRIVE Service.

Error: 45.07 (2D07hex | 11527dec) Description: Invalid process output data		
	Response: Fieldbus – timeout response	
	Cause	Measure
	– The fieldbus master sends invalid process output data. – The fieldbus interface has detected an internal failure of the process data exchange and marks the process output data as invalid.	– Check whether the PLC is in "Stop" state. – Restart the PLC. – Check the configuration of the fieldbus master. – In the event of a failure of the internal process data exchange, switch the device off and then on again.

33955948/EN – 05/2026

Error: 45.09 (2D09hex | 11529dec) Description: Warning		
	Response: Warning	
	Cause	Measure
	Inverter detected non-critical error on device-internal connection to fieldbus interface.	– Switch the device off and on again. – If the warning occurs repeatedly, contact SEW-EURODRIVE Service.

Error: 45.50 (2D32hex | 11570dec) Description: Warning		
	Response: Warning with self-reset	
	Cause	Measure
	Fieldbus interface signals a warning.	Observe the warning of the fieldbus interface subcomponent. Identify the exact cause of this warning and take the appropriate measures for elimination.

Error: 45.51 (2D33hex | 11571dec) Description: Fault		
	Response: Fieldbus – timeout response	
	Cause	Measure
	Fieldbus interface detected an error.	Observe the error code of the fieldbus interface subcomponent. Identify the exact cause of this error message and take the appropriate measures to eliminate the error.

Error: 45.52 (2D34hex | 11572dec) Description: Critical error		
	Response: Fieldbus – timeout response	
	Cause	Measure
	Fieldbus interface detected a critical error.	Observe the error code of the fieldbus interface subcomponent. Identify the exact cause of this error message and take the appropriate measures to eliminate the error.

33955948/EN – 05/2026

13.8.33 Error 46 MOVISAFE® CS..

Error: 46.01 (2E01hex | 11777dec) Description: MOVISAFE® CS..A safety option no longer responding		
	Response: Output stage inhibit	
	Cause	Measure
	No synchronization could be performed with the safety option.	– When using a pluggable safety option, check the device assignment of the basic device and the safety option. – When using a pluggable safety option, check the slot and installation of the safety option. – Switch the device off and on again. – A previously started firmware update was aborted. – Restart the firmware update of the MOVISAFE® CS..A safety option via the firmware loader. – If the error occurs repeatedly, contact SEW-EURODRIVE Service.

Error: 46.02 (2E02hex | 11778dec) Description: Invalid variant		
	Response: Output stage inhibit	
	Cause	Measure
	Safety option variant does not match inverter type.	Use the correct safety option variant.
	In a double axis of the MOVIDRIVE® modular application inverter, only safety options without encoder interface must be used.	Use the correct safety option variant.

Error: 46.03 (2E03hex | 11779dec) Description: MOVISAFE® CS..A safety option no longer responding		
	Response: Output stage inhibit with self reset	
	Cause	Measure
	Communication between inverter and safety option interrupted.	– When using a pluggable safety option, check the installation. – If the error occurs repeatedly, contact SEW-EURODRIVE Service.
	Safety option signaled a warning.	– When using a pluggable safety option, check the installation. – If the error occurs repeatedly, contact SEW-EURODRIVE Service.

33955948/EN – 05/2026

Error: 46.50 (2E32hex | 11826dec) Description: Warning		
	Response: Warning with self-reset	
	Cause	Measure
	Safety option signaled a warning	Observe the warning of the safety option subcomponent. Identify the exact cause of this warning and take the appropriate measures for elimination.

Error: 46.51 (2E33hex | 11827dec) Description: Fault		
	Response: Emergency stop + output stage inhibit with self reset	
	Cause	Measure
	Safety option detected an error.	Observe the error code of the safety option subcomponent. Identify the exact cause of this error message and take the appropriate measures to eliminate the error.

Error: 46.52 (2E34hex | 11828dec) Description: System error/data error/critical error		
	Response: Output stage inhibit with self reset	
	Cause	Measure
	The MOVISAFE® CS..A safety option has detected an error.	Open the error status of the safety option in section [Diagnostics] > [MOVISAFE® CS..]. Identify the exact cause of this error message of highest priority and take the appropriate measures to eliminate the error.

13.8.34 Fault 51 Analog processing

Error: 51.01 (3301hex | 13057dec) Description: Current at analog current input too small		
	Response: Analog input – 4 mA limit undershot	
	Cause	Measure
	Input current at analog input below 4 mA.	– Check the wiring. – Check the parameterization of the analog input.

Error: 51.02 (3302hex | 13058dec) Description: Voltage/current changeover faulty		
	Response: Output stage inhibit	
	Cause	Measure
	The hardware configuration for switching between voltage input and current input on the basic unit does not match the parameterization of the analog input.	– Check the position of the switch for the current/voltage configuration or – Check the parameterization of the analog input.

13.8.35 Fault 52 Ex protection function category 2

Error: 52.01 (3401hex | 13313dec) **Description: Startup error**		
	Response: Output stage inhibit	
	Cause	Measure
	One or several parameters of the explosion protection function have been changed.	Before activating the function, take the explosion protection function into operation.

Error: 52.02 (3402hex | 13314dec) **Description: Invalid function activated**		
	Response: Output stage inhibit	
	Cause	Measure
	The explosion protection function and the "standstill current" function may not be active at the same time.	Disable the "standstill current" function.

Error: 52.03 (3403hex | 13315dec) **Description: Nominal inverter current too large**		
	Response: Output stage inhibit	
	Cause	Measure
	Ratio of nominal inverter current and nominal motor current too large.	Check the assignment of motor and inverter.

Error: 52.04 (3404hex | 13316dec) **Description: Parameterization of current limit characteristic faulty**		
	Response: Output stage inhibit	
	Cause	Measure
	Error setting parameters for current limit characteristic.	– Perform startup again. – If the error occurs repeatedly, contact SEW-EURODRIVE Service.

Error: 52.05 (3405hex | 13317dec) **Description: Time duration exceeded for f < 5 Hz**		
	Response: Emergency stop + output stage inhibit	
	Cause	Measure
	The rotating field frequency must not be below 5 Hz for longer than 60 s. This time period has been exceeded.	– Check the project planning. – Make sure that work is not performed below 5 Hz for a longer period of time. – Check behavior in idle state. For instance, activate the "FCB 01 output stage inhibit" drive function for position hold control on the device.

33955948/EN – 05/2026

13.9 Error description for CS..A safety option

13.9.1 Error 13 Encoder 1

Error: 13.01 (0D01hex | 3329dec) **Description: Error during position comparison check**		
	Response: FS – warning	
	Cause	Measure
	Fault detected when comparing raw position and track counter of absolute encoder.	– Check the wiring of the track signals. – Check for EMC-compliant installation. – Replace the encoder. – Replace the encoder card. Note that in the manual mode "emergency mode", you can move the drive using the motor encoder even if the external position encoder is faulty.

Error: 13.05 (0D05hex | 3333dec) **Description: Internal warning**		
	Response: FS – warning	
	Cause	Measure
	Encoder signaled a warning.	– Check the wiring. – Check interference sources (light beam interrupted, reflector, signal cables, etc.). – Clean the sensor.

Error: 13.10 (0D0Ahex | 3338dec) **Description: Position tolerance range exceeded**		
	Response: FS – warning	
	Cause	Measure
	Jump in position impermissibly large.	– Check the startup parameters. – Check the wiring. – Check interference sources (light beam interrupted, reflector, signal cables, etc.). – Replace the encoder. Note that in the manual mode "emergency mode", you can move the drive using the motor encoder even if the external position encoder is faulty.

33955948/EN – 05/2026

Error: 13.11 (0D0Bhex | 3339dec) Description: Encoder data timeout		
	Response: FS – warning	
	Cause	Measure
	Internal error detected in resolver evaluation.	Check for EMC-compliant installation.
	Communication to the encoder has failed.	Contact SEW-EURODRIVE Service.

Error: 13.13 (0D0Dhex | 3341dec) Description: Initialization error	
Response: FS – encoder fault	
Cause	Measure
Communication error detected on RS485 interface during initialization.	– Check the wiring. – Check the startup parameters. – Check the encoder settings. Note that in the manual mode "emergency mode", you can move the drive using the motor encoder even if the external position encoder is faulty.

Error: 13.14 (0D0Ehex | 3342dec) Description: Communication error	
Response: FS – warning	
Cause	Measure
Faulty communication with encoder.	– Check the voltage supply. – Check for EMC-compliant installation. – Check the wiring. – Replace the encoder. Note that in the manual mode "emergency mode", you can move the drive using the motor encoder even if the external position encoder is faulty.

Error: 13.17 (0D11hex | 3345dec) Description: High level in data line – error	
Response: FS – warning	
Cause	Measure
Permanent high level of data signal.	– Check the wiring. – Check the encoder. Note that in the manual mode "emergency mode", you can move the drive using the motor encoder even if the external position encoder is faulty.

33955948/EN – 05/2026

Error: 13.19 (0D13hex | 3347dec) Description: Low level in data line – error		
	Response: FS – warning	
	Cause	Measure
	Permanent low level of data signal.	– Check the wiring. – Check the encoder. Note that in the manual mode "emergency mode", you can move the drive using the motor encoder even if the external position encoder is faulty.

Error: 13.21 (0D15hex | 3349dec) Description: SSI encoder – fault		
	Response: FS – warning	
	Cause	Measure
	SSI encoder detected an error.	– Check the startup parameters. – Check the settings on the SSI encoder. – Check the wiring. – Check interference sources (light beam interrupted, reflector, signal cables, etc.). – Replace the encoder. Note that in the manual mode "emergency mode", you can move the drive even if the external position encoder is faulty.

Error: 13.23 (0D17hex | 3351dec) Description: Internal error		
	Response: FS – warning	
	Cause	Measure
	Encoder signaled internal fault. The encoder error code is displayed in MOVISUITE® in the [Diagnostics] > [Error memory T.] parameter group in the "Internal" parameter.	– Check the wiring. – Check interference sources (light beam interrupted, reflector, signal cables, etc.). – Replace the encoder. Note that in the manual mode "emergency mode", you can move the drive using the motor encoder even if the external position encoder is faulty.

33955948/EN – 05/2026

Error: 13.50 (0D32hex | 3378dec) Description: Safety card encoder fault		
	Response: FS – encoder fault	
	Cause	Measure
	Encoder fault detected on safety card.	– Check the wiring. – Check interference sources. – Apply the shield of the encoder cable over a large area. – Check the encoder.

Error: 13.51 (0D33hex | 3379dec) Description: Safety card encoder warning		
	Response: FS – warning	
	Cause	Measure
	Encoder fault detected while safety subfunction is inactive.	– Check the wiring. – Check interference sources. – Apply the shield of the encoder cable over a large area. – Check the encoder.

Error: 13.52 (0D34hex | 3380dec) Description: Encoder signal error		
	Response: FS – warning	
	Cause	Measure
	Unexpected encoder signals detected.	– Check the wiring. – Check interference sources. – Apply the shield of the encoder cable over a large area. – Check the encoder.

Error: 13.53 (0D35hex | 3381dec) Description: Maximum frequency exceeded		
	Response: FS – warning	
	Cause	Measure
	Maximum permitted signal frequency exceeded.	– Check the maximum input frequency. – Check the wiring. – Check interference sources. – Apply the shield of the encoder cable over a large area. – Check the encoder.

33955948/EN – 05/2026

Error: 13.54 (0D36hex | 3382dec) Description: Cross comparison error		
	Response: FS – warning	
	Cause	Measure
	Cross comparison error in encoder evaluation.	– Check the wiring. – Check interference sources. – Apply the shield of the encoder cable over a large area. – Check the encoder.

Error: 13.55 (0D37hex | 3383dec) Description: Level monitoring		
	Response: FS – warning	
	Cause	Measure
	Track signal level outside tolerance band.	– Check the wiring. – Check interference sources. – Apply the shield of the encoder cable over a large area. – Check the encoder.

Error: 13.56 (0D38hex | 3384dec) Description: Maximum speed exceeded while encoder fault muting is active		
	Response: FS – system error	
	Cause	Measure
	Permitted maximum speed exceeded while encoder fault muting is active.	– Check the maximum speed of the application while encoder error muting is active and adjust if necessary. – Check the parameterization of the safety card and adjust if necessary.

Error: 13.57 (0D39hex | 3385dec) Description: Maximum speed exceeded		
	Response: FS – encoder fault	
	Cause	Measure
	Permitted maximum speed exceeded.	– Check the maximum speed of the application and adjust if necessary. – Check the parameterization of the safety card and adjust if necessary.

33955948/EN – 05/2026

Error: 13.58 (0D3Ahex | 3386dec) Description: Detection limit exceeded		
	Response: FS – warning	
	Cause	Measure
	Speed exceeded sensing limit.	– Check the maximum speed of the application and adjust if necessary. – Check the parameterization of the safety card and adjust if necessary.

Error: 13.59 (0D3Bhex | 3387dec) Description: Encoder no longer referenced		
	Response: FS – warning	
	Cause	Measure
	Diagnostics error detected during encoder evaluation. Referencing is canceled.	– Remove the cause of the error. – Reference the encoder again.

Error: 13.60 (0D3Chex | 3388dec) Description: Travel limit exceeded		
	Response: FS – encoder fault	
	Cause	Measure
	Travel limit violated for an application with limited travel distance.	– Check the startup parameters. – Check the application. – Perform referencing again.

Error: 13.61 (0D3Dhex | 3389dec) Description: Wrong number of bits per telegram		
	Response: FS – warning	
	Cause	Measure
	The number of bits received per telegram does not match the parameterized number of bits.	– Check the startup parameters. – Check the wiring. – Check interference sources.

Error: 13.62 (0D3Ehex | 3390dec) Description: Wrong clock frequency		
	Response: FS – warning	
	Cause	Measure
	Measured clock does not correspond with parameterized clock.	– Check the startup parameters. – Check the wiring. – Check interference sources.

33955948/EN – 05/2026

Error: 13.64 (0D40hex | 3392dec) Description: Inconsistent or corrupt data		
	Response: FS – warning	
	Cause	Measure
	Inconsistent or corrupt data detected during encoder evaluation.	– Check interference sources (e.g. from the area of EMC). – Check the encoder cable or shield. – Check the startup parameters.

Error: 13.65 (0D41hex | 3393dec) Description: Illumination color error		
	Response: FS – warning	
	Cause	Measure
	The lighting color in the encoder data does not match the lighting color in use.	– Switch the device off and on again. – If the error occurs repeatedly, replace the encoder and send it to SEW-EURODRIVE together with the error number. For further support, contact SEW-EURODRIVE Service.

Error: 13.66 (0D42hex | 3394dec) Description: No position code visible		
	Response: FS – warning	
	Cause	Measure
	Optical encoder cannot decode valid barcode/ matrix code in field of view.	– Check the code tape for damage (e.g. gaps, covering, contamination, reflecting materials, or ambient light sources). – Check the optical system of the encoder for damage or dirt. – Check diagnostic data indicating faulty assembly. – Check the encoder for proper mounting, such as distance to the code tape, lateral offset, or twisting. – To make the system more robust, increase the value of the "Threshold for tolerated faults – PXV encoder" parameter. – If the error occurs repeatedly, replace the encoder and send it to SEW-EURODRIVE together with the error number. For further support, contact SEW-EURODRIVE Service.

33955948/EN – 05/2026

Error: 13.67 (0D43hex | 3395dec) Description: SSI encoder – warning		
	Response: FS – warning	
	Cause	Measure
	The SSI encoder signaled a warning.	– Check the startup parameters. – Check the settings on the SSI encoder. – Check the wiring. – Check interference sources (light beam interrupted, reflector, signal cables, etc.). – Replace the encoder. INFORMATION In "Emergency mode" manual mode, you can move the drive even with a faulty external position encoder.

Error: 13.68 (0D44hex | 3396dec) Description: Internal fault – overflow		
	Response: FS – warning	
	Cause	Measure
	Overflow detected during internal calculation.	Adjust the startup parameters, such as numerator scaling/denominator scaling.

Error: 13.69 (0D45hex | 3397dec) Description: Invalid HIPERFACE® communication		
	Response: FS – warning	
	Cause	Measure
	Failure to establish connection with encoder.	– Acknowledge the encoder fault in the basic device. – Check the voltage supply. – Check interference sources (e.g. from the area of EMC). – Check the wiring. INFORMATION In "Emergency mode" manual mode, you can move the drive using the motor encoder even if the external position encoder is faulty.

33955948/EN – 05/2026

Error: 13.70 (0D46hex | 3398dec) Description: Error detecting low level		
	Response: FS – warning	
	Cause	Measure
	Fault detected while sensing low level.	– Check the wiring. – Check the encoder. – If the error occurs repeatedly, replace the safety card and send it together with the error number to SEW-EURODRIVE. For further support, contact SEW-EURODRIVE Service. INFORMATION In "Emergency mode" manual mode, you can move the drive using the motor encoder even if the external position encoder is faulty.

Error: 13.71 (0D47hex | 3399dec) Description: Response time of safety card exceeded		
	Response: FS – warning	
	Cause	Measure
	The response time for calculating the speed or acceleration cannot be adhered to. This can be due to the following reasons: – The safety card has received more corrupt telegrams from the encoder than the fault tolerance allows. – The actual refresh time of the encoder is greater than parameterized.	– Check the wiring. – Check the encoder. – Adjust the refresh time to the value in the encoder documentation. – If the error occurs repeatedly, replace the safety card and send it together with the error number to SEW-EURODRIVE. For further support, contact SEW-EURODRIVE Service. INFORMATION In "Emergency mode" manual mode, you can move the drive using the motor encoder even if the external position encoder is faulty.

Error: 13.72 (0D48hex | 3400dec) Description: Internal fault – overflow during position calculation		
	Response: FS – warning	
	Cause	Measure
	Overflow detected during internal calculation of the position.	Adjust startup parameters, for example: – Numerator scaling/denominator scaling of the encoder – User units of the position

Error: 13.73 (0D49hex | 3401dec) Description: Encoder range overflow pending		
	Response: FS – warning	
	Cause	Measure
	The encoder is just before overflow. The system is too fast. The position difference is above the 1/4 encoder range. In the case of the 1/2 encoder range, an undetected direction of rotation reversal occurs and consequently a permanent fault in position.	– Reduce the system speed. – Use an encoder with a larger encoder measuring range (resolution/multi-turn range).

Error: 13.75 (0D4Bhex | 3403dec) Description: Internal communication error		
	Response: FS – encoder fault	
	Cause	Measure
	Internal fault detected in encoder communication.	– Check the voltage supply. – Check the slot and plug-in connection. – Check for EMC-compliant installation. – Check the wiring. INFORMATION In "Emergency mode" manual mode, you can move the drive using the motor encoder even if the external position encoder is faulty.

Error: 13.76 (0D4Chex | 3404dec) Description: Incompatible encoder		
	Response: FS – encoder fault	
	Cause	Measure
	The connected encoder is not compatible with the configured encoder.	– Adjust the configuration. – Connect a compatible encoder.

Error: 13.77 (0D4Dhex | 3405dec) Description: Automatic pairing not possible		
	Response: FS – encoder fault	
	Cause	Measure
	Automatic pairing cannot be performed on a MOVIDRIVE® double-axis module.	In the Assist CS.. tool, reset the pairing of the safe MOVILINK® DDI encoder using the menu command [MOVILINK® DDI encoder] > [Perform pairing].
	If the safe MOVILINK® DDI encoder is not new, the error can be triggered once during startup of a MOVIDRIVE® double-axis module.	If the fault occurs repeatedly, contact SEW-EURODRIVE Service.

33955948/EN – 05/2026

Error: 13.78 (0D4Ehex | 3406dec) Description: Invalid process data		
	Response: FS – warning	
	Cause	Measure
	The encoder cannot calculate valid actual values.	– Check the wiring. – Check the encoder. – If the error occurs repeatedly, replace the safety option and send it together with the error number to SEW-EURODRIVE Service. For further support, contact SEW-EURODRIVE Service.

Error: 13.79 (0D4Fhex | 3407dec) Description: Stop of application requested		
	Response: FS – encoder fault	
	Cause	Measure
	A fault has been detected that could result in a defect in the encoder or the system. The encoder has requested that the application be stopped.	– Observe the additional error message of the safety option subcomponent. Identify the exact cause of this error message and take the appropriate measures to eliminate the error. – If the error occurs repeatedly, contact SEW-EURODRIVE Service.

Error: 13.80 (0D50hex | 3408dec) Description: Firmware signature of safe MOVILINK® DDI encoder faulty		
	Response: FS – encoder fault	
	Cause	Measure
	The firmware of the safe MOVILINK® DDI encoder could not be confirmed on one or both channels.	– Generate the firmware checksum of the safe MOVILINK® DDI encoder in the Assist CS..A tool. – If the error occurs repeatedly, contact SEW-EURODRIVE Service.

Error: 13.81 (0D51hex | 3409dec) Description: Safe MOVILINK® DDI encoder – temperature monitoring error		
	Response: FS – warning	
	Cause	Measure
	Error detected during temperature monitoring.	Reduce the motor temperature.

33955948/EN – 05/2026

13.9.2 Error 14 Encoder 2

Error: 14.01 (0E01hex | 3585dec) **Description: Error during position comparison check**		
	Response: FS – warning	
	Cause	Measure
	Fault detected when comparing raw position and track counter of absolute encoder.	– Check the wiring of the track signals. – Check for EMC-compliant installation. – Replace the encoder. – Replace the encoder card. INFORMATION In "Emergency mode" manual mode, you can move the drive using the motor encoder even if the external position encoder is faulty.

Error: 14.10 (0E0Ahex | 3594dec) **Description: Position tolerance range exceeded**		
	Response: FS – warning	
	Cause	Measure
	Jump in position impermissibly large.	– Check the startup parameters. – Check the wiring. – Check interference sources (light beam interrupted, reflector, signal cables, etc.). – Replace the encoder. Note that in the manual mode "emergency mode", you can move the drive using the motor encoder even if the external position encoder is faulty.

Error: 14.11 (0E0Bhex | 3595dec) **Description: Encoder data timeout**		
	Response: FS – warning	
	Cause	Measure
	Communication to the encoder has failed.	Contact SEW-EURODRIVE Service.
	Internal error detected in resolver evaluation.	Check for EMC-compliant installation.

33955948/EN – 05/2026

Error: 14.14 (0E0Ehex | 3598dec) Description: Communication error		
	Response: FS – warning	
	Cause	Measure
	Faulty communication with encoder.	– Check the voltage supply. – Check for EMC-compliant installation. – Check the wiring. – Replace the encoder. Note that in the manual mode "emergency mode", you can move the drive using the motor encoder even if the external position encoder is faulty.

Error: 14.17 (0E11hex | 3601dec) Description: High level in data line – error		
	Response: FS – warning	
	Cause	Measure
	Permanent high level of data signal.	– Check the wiring. – Check the encoder. Note that in the manual mode "emergency mode", you can move the drive using the motor encoder even if the external position encoder is faulty.

Error: 14.19 (0E13hex | 3603dec) Description: Low level in data line – error		
	Response: FS – warning	
	Cause	Measure
	Permanent low level of data signal.	– Check the wiring. – Check the encoder. Note that in the manual mode "emergency mode", you can move the drive using the motor encoder even if the external position encoder is faulty.

33955948/EN – 05/2026

Error: 14.21 (0E15hex | 3605dec) Description: SSI encoder – fault		
	Response: FS – warning	
	Cause	Measure
	SSI encoder detected an error.	– Check the startup parameters. – Check the settings on the SSI encoder. – Check the wiring. – Check interference sources (light beam interrupted, reflector, signal cables, etc.). – Replace the encoder. Note that in the manual mode "emergency mode", you can move the drive even if the external position encoder is faulty.

Error: 14.23 (0E17hex | 3607dec) Description: Internal error		
	Response: FS – warning	
	Cause	Measure
	Encoder signaled internal fault. INFORMATION The encoder error code is displayed in MOVISUITE® in the [Diagnostics] > [Error memory T.] parameter group in the "Internal" parameter.	– Check the wiring. – Check interference sources (light beam interrupted, reflector, signal cables, etc.). – Replace the encoder. Note that in the manual mode "emergency mode", you can move the drive using the motor encoder even if the external position encoder is faulty.

Error: 14.50 (0E32hex | 3634dec) Description: Safety card encoder fault		
	Response: FS – encoder fault	
	Cause	Measure
	Encoder fault detected on safety card.	– Check the wiring. – Check interference sources. – Apply the shield of the encoder cable over a large area. – Check the encoder.

33955948/EN – 05/2026

Error: 14.52 (0E34hex | 3636dec) Description: Encoder signal error		
	Response: FS – warning	
	Cause	Measure
	Unexpected encoder signals detected.	– Check the wiring. – Check interference sources. – Apply the shield of the encoder cable over a large area. – Check the encoder.

Error: 14.53 (0E35hex | 3637dec) Description: Maximum frequency exceeded		
	Response: FS – warning	
	Cause	Measure
	Maximum permitted signal frequency exceeded.	– Check the maximum input frequency. – Check the wiring. – Check interference sources. – Apply the shield of the encoder cable over a large area. – Check the encoder.

Error: 14.54 (0E36hex | 3638dec) Description: Cross comparison error		
	Response: FS – warning	
	Cause	Measure
	Cross comparison error in encoder evaluation.	– Check the wiring. – Check interference sources. – Apply the shield of the encoder cable over a large area. – Check the encoder.

Error: 14.55 (0E37hex | 3639dec) Description: Level monitoring		
	Response: FS – warning	
	Cause	Measure
	Track signal level outside tolerance band.	– Check the wiring. – Check interference sources. – Apply the shield of the encoder cable over a large area. – Check the encoder.

33955948/EN – 05/2026

Error: 14.56 (0E38hex | 3640dec) Description: Maximum speed exceeded while encoder fault muting is active		
	Response: FS – system error	
	Cause	Measure
	Permitted maximum speed exceeded while encoder fault muting is active.	– Check the maximum speed of the application while encoder error muting is active and adjust if necessary. – Check the parameterization of the safety card and adjust if necessary.

Error: 14.57 (0E39hex | 3641dec) Description: Maximum speed exceeded		
	Response: FS – encoder fault	
	Cause	Measure
	Permitted maximum speed exceeded.	– Check the maximum speed of the application and adjust if necessary. – Check the parameterization of the safety card and adjust if necessary.

Error: 14.58 (0E3Ahex | 3642dec) Description: Detection limit exceeded		
	Response: FS – warning	
	Cause	Measure
	Speed exceeded sensing limit.	– Check the maximum speed of the application and adjust if necessary. – Check the parameterization of the safety card and adjust if necessary.

Error: 14.59 (0E3Bhex | 3643dec) Description: Encoder no longer referenced		
	Response: FS – warning	
	Cause	Measure
	Diagnostics error detected during encoder evaluation. Referencing is canceled.	– Remove the cause of the error. – Reference the encoder again.

Error: 14.60 (0E3Chex | 3644dec) Description: Travel limit exceeded		
	Response: FS – encoder fault	
	Cause	Measure
	Travel limit violated for an application with limited travel distance.	– Check the startup parameters. – Check the application. – Perform referencing again.

33955948/EN – 05/2026

Error: 14.61 (0E3Dhex | 3645dec) Description: Wrong number of bits per telegram		
	Response: FS – warning	
	Cause	Measure
	The number of bits received per telegram does not match the parameterized number of bits.	– Check the startup parameters. – Check the wiring. – Check interference sources.

Error: 14.62 (0E3Ehex | 3646dec) Description: Wrong clock frequency		
	Response: FS – warning	
	Cause	Measure
	Measured clock does not correspond with parameterized clock.	– Check the startup parameters. – Check the wiring. – Check interference sources.

Error: 14.64 (0E40hex | 3648dec) Description: Inconsistent or corrupt data		
	Response: FS – warning	
	Cause	Measure
	Inconsistent or corrupt data detected during encoder evaluation.	– Check interference sources (e.g. from the area of EMC). – Check the encoder cable or shield. – Check the startup parameters.

Error: 14.65 (0E41hex | 3649dec) Description: Illumination color error		
	Response: FS – warning	
	Cause	Measure
	The lighting color in the encoder data does not match the lighting color in use.	– Switch the device off and on again. – If the error occurs repeatedly, replace the encoder and send it to SEW-EURODRIVE together with the error number. For further support, contact SEW-EURODRIVE Service.

33955948/EN – 05/2026

Error: 14.66 (0E42hex | 3650dec) Description: No position code visible		
	Response: FS – warning	
	Cause	Measure
	Optical encoder cannot decode valid barcode/ matrix code in field of view.	– Check the code tape for damage (e.g. gaps, covering, contamination, reflecting materials, or ambient light sources). – Check the optical system of the encoder for damage or dirt. – Check diagnostic data indicating faulty assembly. – Check the encoder for proper mounting, such as distance to the code tape, lateral offset, or twisting. – To make the system more robust, increase the value of the "Threshold for tolerated faults – PXV encoder" parameter. – If the error occurs repeatedly, replace the encoder and send it to SEW-EURODRIVE together with the error number. For further support, contact SEW-EURODRIVE Service.

Error: 14.67 (0E43hex | 3651dec) Description: SSI encoder – warning		
	Response: FS – warning	
	Cause	Measure
	The SSI encoder signaled a warning.	– Check the startup parameters. – Check the settings on the SSI encoder. – Check the wiring. – Check interference sources (light beam interrupted, reflector, signal cables, etc.). – Replace the encoder. INFORMATION In "Emergency mode" manual mode, you can move the drive even with a faulty external position encoder.

Error: 14.68 (0E44hex | 3652dec) Description: Internal fault – overflow		
	Response: FS – warning	
	Cause	Measure
	Overflow detected during internal calculation.	Adjust the startup parameters, such as numerator scaling/denominator scaling.

33955948/EN – 05/2026

Error: 14.69 (0E45hex | 3653dec) Description: Invalid HIPERFACE® communication		
	Response: FS – warning	
	Cause	Measure
	Failure to establish connection with encoder.	– Acknowledge the encoder fault in the basic device. – Check the voltage supply. – Check interference sources (e.g. from the area of EMC). – Check the wiring. INFORMATION In "Emergency mode" manual mode, you can move the drive using the motor encoder even if the external position encoder is faulty.

Error: 14.70 (0E46hex | 3654dec) Description: Error detecting low level		
	Response: FS – warning	
	Cause	Measure
	Fault detected while sensing low level.	– Check the wiring. – Check the encoder. – If the error occurs repeatedly, replace the safety card and send it together with the error number to SEW-EURODRIVE. For further support, contact SEW-EURODRIVE Service. INFORMATION In "Emergency mode" manual mode, you can move the drive using the motor encoder even if the external position encoder is faulty.

33955948/EN – 05/2026

Error: 14.71 (0E47hex | 3655dec) Description: Response time of safety card exceeded		
	Response: FS – warning	
	Cause	Measure
	The response time for calculating the speed or acceleration cannot be adhered to. This can be due to the following reasons: – The safety card has received more corrupt telegrams from the encoder than the fault tolerance allows. – The actual refresh time of the encoder is greater than parameterized.	– Check the wiring. – Check the encoder. – Adjust the refresh time to the value in the encoder documentation. – If the error occurs repeatedly, replace the safety card and send it together with the error number to SEW-EURODRIVE. For further support, contact SEW-EURODRIVE Service. INFORMATION In "Emergency mode" manual mode, you can move the drive using the motor encoder even if the external position encoder is faulty.

Error: 14.72 (0E48hex | 3656dec) Description: Internal fault – overflow during position calculation		
	Response: FS – warning	
	Cause	Measure
	Overflow detected during internal calculation of the position.	Adjust startup parameters, for example: – Numerator scaling/denominator scaling of the encoder – User units of the position

Error: 14.73 (0E49hex | 3657dec) Description: Encoder range overflow pending		
	Response: FS – warning	
	Cause	Measure
	The encoder is just before overflow. The system is too fast. The position difference is above the 1/4 encoder range. In the case of the 1/2 encoder range, an undetected direction of rotation reversal occurs and consequently a permanent fault in position.	– Reduce the system speed. – Use an encoder with a larger encoder measuring range (resolution/multi-turn range).

33955948/EN – 05/2026

13.9.3 Error 15 Encoder 3

Error: 15.01 (0F01hex | 3841dec) Description: Position comparison check		
	Response: FS – warning	
	Cause	Measure
	Fault detected when comparing raw position and track counter of absolute encoder.	– Check the wiring of the track signals. – Check interference sources (e.g. from the area of EMC). – Replace the encoder. – Replace the card. INFORMATION In "Emergency mode" manual mode, you can move the drive using the motor encoder even if the external position encoder is faulty.

Error: 15.10 (0F0Ahex | 3850dec) Description: Position tolerance range exceeded		
	Response: FS – warning	
	Cause	Measure
	Position outside tolerance range.	– Check the startup parameters. – Check the wiring. – Check interference sources (light beam interrupted, reflector, signal cables, etc.). – Replace the encoder. INFORMATION In "Emergency mode" manual mode, you can move the drive using the motor encoder even if the external position encoder is faulty.

Error: 15.11 (0F0Bhex | 3851dec) Description: Encoder data timeout		
	Response: FS – warning	
	Cause	Measure
	Encoder process data triggered timeout state.	– Check interference sources (e.g. from the area of EMC). – Check the startup parameters. INFORMATION In "Emergency mode" manual mode, you can move the drive using the motor encoder even if the external position encoder is faulty.

33955948/EN – 05/2026

Error: 15.14 (0F0Ehex | 3854dec) Description: Communication error		
	Response: FS – warning	
	Cause	Measure
	Faulty communication with encoder.	– Check the voltage supply. – Check interference sources (e.g. from the area of EMC). – Check the wiring. – Replace the encoder. INFORMATION In "Emergency mode" manual mode, you can move the drive using the motor encoder even if the external position encoder is faulty.

Error: 15.17 (0F11hex | 3857dec) Description: Permanent high level in data line		
	Response: FS – warning	
	Cause	Measure
	Permanent high level of data signal.	– Check the wiring. – Check the encoder. INFORMATION In "Emergency mode" manual mode, you can move the drive using the motor encoder even if the external position encoder is faulty.

Error: 15.19 (0F13hex | 3859dec) Description: Permanent low level in data line		
	Response: FS – warning	
	Cause	Measure
	Permanent low level of data signal.	– Check the wiring. – Check the encoder. INFORMATION In "Emergency mode" manual mode, you can move the drive using the motor encoder even if the external position encoder is faulty.

33955948/EN – 05/2026

Error: 15.21 (0F15hex | 3861dec) Description: SSI error bit		
	Response: FS – warning	
	Cause	Measure
	SSI encoder detected an error.	– Check the startup parameters. – Check the settings on the SSI encoder (fault bit). – Check the wiring. – Check interference sources (light beam interrupted, reflector, signal cables, etc.). – Replace the encoder. INFORMATION In "Emergency mode" manual mode, you can move the drive even with a faulty external position encoder.

Error: 15.23 (0F17hex | 3863dec) Description: Internal error		
	Response: FS – warning	
	Cause	Measure
	Encoder signaled internal fault.	– Check the wiring. – Check interference sources (light beam interrupted, reflector, signal cables, etc.). – Replace the encoder. INFORMATION In "Emergency mode" manual mode, you can move the drive using the motor encoder even if the external position encoder is faulty.

Error: 15.52 (0F34hex | 3892dec) Description: Encoder signal error		
	Response: FS – warning	
	Cause	Measure
	Unexpected encoder signals detected.	– Check the wiring. – Check interference sources. – Apply the shield of the encoder cable over a large area. – Check the encoder.

Error: 15.53 (0F35hex | 3893dec) Description: Maximum frequency exceeded		
	Response: FS – warning	
	Cause	Measure
	Maximum permitted signal frequency exceeded.	– Check the maximum input frequency. – Check the wiring. – Check interference sources. – Apply the shield of the encoder cable over a large area. – Check the encoder.

Error: 15.54 (0F36hex | 3894dec) Description: Cross comparison error		
	Response: FS – warning	
	Cause	Measure
	Cross comparison error in encoder evaluation.	– Check the wiring. – Check interference sources. – Apply the shield of the encoder cable over a large area. – Check the encoder.

Error: 15.55 (0F37hex | 3895dec) Description: Level monitoring		
	Response: FS – warning	
	Cause	Measure
	Track signal level outside tolerance band.	– Check the wiring. – Check interference sources. – Apply the shield of the encoder cable over a large area. – Check the encoder.

Error: 15.56 (0F38hex | 3896dec) Description: Maximum speed exceeded while encoder fault muting is active		
	Response: FS – system error	
	Cause	Measure
	Permitted maximum speed exceeded while encoder fault muting is active.	– Check the maximum speed of the application while encoder error muting is active and adjust if necessary. – Check the parameterization of the safety card and adjust if necessary.

33955948/EN – 05/2026

Error: 15.57 (0F39hex | 3897dec) Description: Maximum speed exceeded		
	Response: FS – encoder fault	
	Cause	Measure
	Permitted maximum speed exceeded.	– Check the maximum speed of the application and adjust if necessary. – Check the parameterization of the safety card and adjust if necessary.

Error: 15.58 (0F3Ahex | 3898dec) Description: Detection limit exceeded		
	Response: FS – warning	
	Cause	Measure
	Speed exceeded sensing limit.	– Check the maximum speed of the application and adjust if necessary. – Check the parameterization of the safety card and adjust if necessary.

Error: 15.59 (0F3Bhex | 3899dec) Description: Encoder no longer referenced		
	Response: FS – warning	
	Cause	Measure
	Diagnostics error detected during encoder evaluation. Referencing is canceled.	– Remove the cause of the error. – Reference the encoder again.

Error: 15.60 (0F3Chex | 3900dec) Description: Travel limit exceeded		
	Response: FS – encoder fault	
	Cause	Measure
	Travel limit violated for an application with limited travel distance.	– Check the startup parameters. – Check the application. – Perform referencing again.

Error: 15.61 (0F3Dhex | 3901dec) Description: Wrong number of bits per telegram		
	Response: FS – warning	
	Cause	Measure
	The number of bits received per telegram does not match the parameterized number of bits.	– Check the startup parameters. – Check the wiring. – Check interference sources.

33955948/EN – 05/2026

Error: 15.62 (0F3Ehex | 3902dec) Description: Wrong clock frequency		
	Response: FS – warning	
	Cause	Measure
	Measured clock does not correspond with parameterized clock.	– Check the startup parameters. – Check the wiring. – Check interference sources.

Error: 15.64 (0F40hex | 3904dec) Description: Inconsistent or corrupt data		
	Response: FS – warning	
	Cause	Measure
	Inconsistent or corrupt data detected during encoder evaluation.	– Check interference sources (e.g. from the area of EMC). – Check the encoder cable or shield. – Check the startup parameters.

Error: 15.65 (0F41hex | 3905dec) Description: Illumination color error		
	Response: FS – warning	
	Cause	Measure
	The lighting color in the encoder data does not match the lighting color in use.	– Switch the device off and on again. – If the error occurs repeatedly, replace the encoder and send it to SEW-EURODRIVE together with the error number. For further support, contact SEW-EURODRIVE Service.

33955948/EN – 05/2026

Error: 15.66 (0F42hex | 3906dec) Description: No position code visible		
	Response: FS – warning	
	Cause	Measure
	Optical encoder cannot decode valid barcode/ matrix code in field of view.	– Check the code tape for damage (e.g. gaps, covering, contamination, reflecting materials, or ambient light sources). – Check the optical system of the encoder for damage or dirt. – Check diagnostic data indicating faulty assembly. – Check the encoder for proper mounting, such as distance to the code tape, lateral offset, or twisting. – To make the system more robust, increase the value of the "Threshold for tolerated faults – PXV encoder" parameter. – If the error occurs repeatedly, replace the encoder and send it to SEW-EURODRIVE together with the error number. For further support, contact SEW-EURODRIVE Service.

Error: 15.67 (0F43hex | 3907dec) Description: SSI encoder – warning		
	Response: FS – warning	
	Cause	Measure
	The SSI encoder signaled a warning.	– Check the startup parameters. – Check the settings on the SSI encoder. – Check the wiring. – Check interference sources (light beam interrupted, reflector, signal cables, etc.). – Replace the encoder. INFORMATION In "Emergency mode" manual mode, you can move the drive even with a faulty external position encoder.

Error: 15.68 (0F44hex | 3908dec) Description: Internal fault – overflow		
	Response: FS – warning	
	Cause	Measure
	Overflow detected during internal calculation.	Adjust the startup parameters, such as numerator scaling/denominator scaling.

Error: 15.69 (0F45hex | 3909dec) **Description: Invalid HIPERFACE® communication**		
	Response: FS – warning	
	Cause	Measure
	Failure to establish connection with encoder.	– Acknowledge the encoder fault in the basic device. – Check the voltage supply. – Check interference sources (e.g. from the area of EMC). – Check the wiring. INFORMATION In "Emergency mode" manual mode, you can move the drive using the motor encoder even if the external position encoder is faulty.

Error: 15.70 (0F46hex | 3910dec) **Description: Error detecting low level**		
	Response: FS – warning	
	Cause	Measure
	Fault detected while sensing low level.	– Check the wiring. – Check the encoder. – If the error occurs repeatedly, replace the safety card and send it together with the error number to SEW-EURODRIVE. For further support, contact SEW-EURODRIVE Service. INFORMATION In "Emergency mode" manual mode, you can move the drive using the motor encoder even if the external position encoder is faulty.

33955948/EN – 05/2026

Error: 15.71 (0F47hex | 3911dec) Description: Response time of safety card exceeded		
	Response: FS – warning	
	Cause	Measure
	The response time for calculating the speed or acceleration cannot be adhered to. This can be due to the following reasons: – The safety card has received more corrupt telegrams from the encoder than the fault tolerance allows. – The actual refresh time of the encoder is greater than parameterized.	– Check the wiring. – Check the encoder. – Adjust the refresh time to the value in the encoder documentation. – If the error occurs repeatedly, replace the safety card and send it together with the error number to SEW-EURODRIVE. For further support, contact SEW-EURODRIVE Service. INFORMATION In "Emergency mode" manual mode, you can move the drive using the motor encoder even if the external position encoder is faulty.

Error: 15.72 (0F48hex | 3912dec) Description: Internal fault – overflow during position calculation		
	Response: FS – warning	
	Cause	Measure
	Overflow detected during internal calculation of the position.	Adjust startup parameters, for example: – Numerator scaling/denominator scaling of the encoder – User units of the position

Error: 15.73 (0F49hex | 3913dec) Description: Encoder range overflow pending		
	Response: FS – warning	
	Cause	Measure
	The encoder is just before overflow. The system is too fast. The position difference is above the 1/4 encoder range. In the case of the 1/2 encoder range, an undetected direction of rotation reversal occurs and consequently a permanent fault in position.	– Reduce the system speed. – Use an encoder with a larger encoder measuring range (resolution/multi-turn range).

33955948/EN – 05/2026

13.9.4 Error 18 Software error

Error: 18.04 (1204hex | 4612dec) Description: Task system – error		
	Response: FS – system error	
	Cause	Measure
	Error detected while processing internal task system.	– Switch the device off and on again. – If the error occurs repeatedly, contact SEW-EURODRIVE Service.

Error: 18.07 (1207hex | 4615dec) Description: Fatal software error		
	Response: FS – critical fault	
	Cause	Measure
	Fatal software error.	– Switch the device off and on again. – If the error occurs repeatedly, contact SEW-EURODRIVE Service.

Error: 18.09 (1209hex | 4617dec) Description: Internal software error		
	Response: FS – critical fault	
	Cause	Measure
	The software signaled an unexpected event.	– Switch the device off and on again. – If the error occurs repeatedly, contact SEW-EURODRIVE Service.

Error: 18.109 (126Dhex | 4717dec) Description: Internal software error (message)		
	Response: FS – message	
	Cause	Measure
	Software signals unexpected event.	– Switch the device off and on again. – If the message occurs repeatedly, contact SEW-EURODRIVE Service.

33955948/EN – 05/2026

13.9.5 Error 20 Device monitoring

Error: 20.03 (1403hex | 5123dec) Description: Safety card undervoltage DC 24 V		
	Response: FS – system error	
	Cause	Measure
	An undervoltage of the DC 24 V supply voltage was detected.	– Check the DC 24 V supply voltage. – Switch the device off and on again. – If the error occurs repeatedly, replace the safety card and send it together with the error number to SEW-EURODRIVE. For further support, contact SEW-EURODRIVE Service.

Error: 20.04 (1404hex | 5124dec) Description: Safety card overvoltage DC 24 V		
	Response: FS – system error	
	Cause	Measure
	An overvoltage of the DC 24 V supply voltage was detected.	– Check the DC 24 V supply voltage. – Switch the device off and on again. – If the error occurs repeatedly, replace the safety card and send it together with the error number to SEW-EURODRIVE. For further support, contact SEW-EURODRIVE Service.

Error: 20.05 (1405hex | 5125dec) Description: Safety card overvoltage protection DC 24 V		
	Response: FS – system error	
	Cause	Measure
	Error in overvoltage protection circuit.	– Switch the device off and on again. – If the error occurs repeatedly, replace the safety card and send it together with the error number to SEW-EURODRIVE. For further support, contact SEW-EURODRIVE Service.

Error: 20.06 (1406hex | 5126dec) Description: Safety card short-circuit protection DC 24 V		
	Response: FS – system error	
	Cause	Measure
	Error detected during test of overvoltage protection.	– Switch the device off and on again. – If the error occurs repeatedly, replace the safety card and send it together with the error number to SEW-EURODRIVE. For further support, contact SEW-EURODRIVE Service.

33955948/EN – 05/2026

Error: 20.12 (140Chex | 5132dec) **Description: Safety card temperature error**		
	Response: FS – system error	
	Cause	Measure
	Measured temperature outside specified value range.	– Switch the device off and on again. – Take measures to comply with the temperature range specified for the safety module. – If the error occurs repeatedly, replace the safety card and send it together with the error number to SEW-EURODRIVE. For further support, contact SEW-EURODRIVE Service.

Error: 20.13 (140Dhex | 5133dec) **Description: Safety card undervoltage DC 3.3 V**		
	Response: FS – system error	
	Cause	Measure
	An undervoltage of the DC 3.3 V supply voltage was detected.	– Switch the device off and on again. – If the error occurs repeatedly, replace the safety card and send it together with the error number to SEW-EURODRIVE. For further support, contact SEW-EURODRIVE Service.

Error: 20.14 (140Ehex | 5134dec) **Description: Safety card overvoltage DC 3.3 V**		
	Response: FS – system error	
	Cause	Measure
	An overvoltage of the DC 3.3 V supply voltage was detected.	– Switch the device off and on again. – If the error occurs repeatedly, replace the safety card and send it together with the error number to SEW-EURODRIVE. For further support, contact SEW-EURODRIVE Service.

Error: 20.15 (140Fhex | 5135dec) **Description: Safety card DC 12 V encoder supply voltage**		
	Response: FS – encoder fault	
	Cause	Measure
	Upper or lower limit value of DC 12 V encoder supply voltage exceeded.	– Switch the device off and on again. – If the error occurs repeatedly, replace the safety card and send it together with the error number to SEW-EURODRIVE. For further support, contact SEW-EURODRIVE Service.

33955948/EN – 05/2026

Error: 20.16 (1410hex | 5136dec) Description: Safety card DC 12 V encoder voltage supply		
	Response: FS – encoder fault	
	Cause	Measure
	Upper or lower limit value of DC 24 V encoder supply voltage exceeded.	– Switch the device off and on again. – If the error occurs repeatedly, replace the safety card and send it together with the error number to SEW-EURODRIVE. For further support, contact SEW-EURODRIVE Service.

Error: 20.17 (1411hex | 5137dec) Description: Undervoltage encoder reference voltage		
	Response: FS – system error	
	Cause	Measure
	Undervoltage of encoder reference voltage detected.	– Switch the device off and on again. – If the error occurs repeatedly, replace the safety card and send it together with the error number to SEW-EURODRIVE. For further support, contact SEW-EURODRIVE Service.

Error: 20.18 (1412hex | 5138dec) Description: Overvoltage encoder reference voltage		
	Response: FS – system error	
	Cause	Measure
	Overvoltage of encoder reference voltage detected.	– Switch the device off and on again. – If the error occurs repeatedly, replace the safety card and send it together with the error number to SEW-EURODRIVE. For further support, contact SEW-EURODRIVE Service.

Error: 20.19 (1413hex | 5139dec) Description: Safety card undervoltage of reference voltage		
	Response: FS – system error	
	Cause	Measure
	Undervoltage of reference voltage detected.	– Switch the device off and on again. – If the error occurs repeatedly, replace the safety card and send it together with the error number to SEW-EURODRIVE. For further support, contact SEW-EURODRIVE Service.

33955948/EN – 05/2026

Error: 20.20 (1414hex | 5140dec) Description: Safety card overvoltage of reference voltage		
	Response: FS – system error	
	Cause	Measure
	Overvoltage of reference voltage detected.	– Switch the device off and on again. – If the error occurs repeatedly, replace the safety card and send it together with the error number to SEW-EURODRIVE. For further support, contact SEW-EURODRIVE Service.

13.9.6 Error 25 Parameter memory monitoring

Error: 25.55 (1937hex | 6455dec) Description: Incompatible safety card parameter set on replaceable memory module		
	Response: FS – warning	
	Cause	Measure
	Parameter set on replaceable memory module created by incompatible safety card version.	Set the safety card parameters again and validate.

Error: 25.56 (1938hex | 6456dec) Description: Corrupt safety card parameter set on replaceable memory module		
	Response: FS – warning	
	Cause	Measure
	Corrupt safety card parameter set on replaceable memory module.	Set the safety card parameters again and validate.

Error: 25.57 (1939hex | 6457dec) Description: Internal communication error while accessing the replaceable memory module		
	Response: FS – warning	
	Cause	Measure
	Internal communication error while accessing replaceable memory module.	– Switch the device off and on again. – If the error occurs repeatedly, replace the safety card and send it together with the error number to SEW-EURODRIVE. For further support, contact SEW-EURODRIVE Service.

Error: 25.58 (193Ahex | 6458dec) Description: Error applying parameter set of safety card from replaceable memory module		
	Response: FS – warning	
	Cause	Measure
	Failure to apply the parameter set of the safety card from the replaceable memory module can have the following reasons: – The Assist CS.. tool is open. – Another parameterization process is running.	– Switch the device off and on again. – If the error occurs repeatedly, replace the safety card and send it together with the error number to SEW-EURODRIVE. For further support, contact SEW-EURODRIVE Service.

33955948/EN – 05/2026

Error: 25.59 (193Bhex | 6459dec) Description: Communication error with the basic unit		
	Response: FS – warning	
	Cause	Measure
	An error prevented the changed configuration from being saved to the replaceable memory module.	Switch the device off and on again.

Error: 25.100 (1964hex | 6500dec) Description: Device replacement detected		
	Response: FS – message	
	Cause	Measure
	Current parameter set of safety card differs from parameter set stored on replaceable memory module.	No action required. The parameter set of the replaceable memory module is applied to the safety card.

Error: 25.101 (1965hex | 6501dec) Description: Update of data of replaceable memory module of safety option		
	Response: FS – message	
	Cause	Measure
	The data on the replaceable memory module has been saved by an older version of the safety option.	For information only.

13.9.7 Error 27 Encoder system

Error: 27.01 (1B01hex | 6913dec) Description: Relative position value invalid		
	Response: FS – encoder fault	
	Cause	Measure
	Error during diagnostics of encoder involved in calculating the position process value.	Check the exact fault in the fault memory and follow the instructions to remedy the fault.

Error: 27.02 (1B02hex | 6914dec) Description: Relative speed value invalid		
	Response: FS – encoder fault	
	Cause	Measure
	Error during diagnostics of encoder involved in calculating the speed process value.	Check the exact fault in the fault memory and follow the instructions to remedy the fault.

33955948/EN – 05/2026

Error: 27.04 (1B04hex | 6916dec) Description: Failed to start referencing		
	Response: FS – warning	
	Cause	Measure
	Encoder system not ready.	– Repeat referencing. – If the error occurs repeatedly, contact SEW-EURODRIVE Service.

Error: 27.05 (1B05hex | 6917dec) Description: Referencing not completed successfully		
	Response: FS – warning	
	Cause	Measure
	Encoder system not ready.	– Repeat referencing. – If the error occurs repeatedly, contact SEW-EURODRIVE Service.

Error: 27.06 (1B06hex | 6918dec) Description: Encoder process values invalid		
	Response: FS – encoder fault	
	Cause	Measure
	Error during diagnostics of encoder involved in calculating a process value.	Check the exact fault in the fault memory and follow the instructions to remedy the fault.

Error: 27.07 (1B07hex | 6919dec) Description: Discrepancy error absolute position		
	Response: FS – warning	
	Cause	Measure
	Encoders involved in position calculation signal different absolute position values.	– Check the tolerance parameters. – Check the configuration of the drive train. – Check the system.

Error: 27.08 (1B08hex | 6920dec) Description: Cross-checking error speed calculation		
	Response: FS – warning	
	Cause	Measure
	Encoders involved in speed calculation signaled different speed values.	– Check the tolerance parameters. – Check the configuration of the drive train. – Check the system.

33955948/EN – 05/2026

Error: 27.09 (1B09hex | 6921dec) Description: Discrepancy error relative position		
	Response: FS – warning	
	Cause	Measure
	Encoders involved in position calculation signal different relative position values.	– Check the tolerance parameters. – Check the configuration of the drive train. – Check the system.

13.9.8 Error 32 Communication

Error: 32.13 (200Dhex | 8205dec) Description: Process data timeout		
	Response: FS – system error	
	Cause	Measure
	Timeout in the process data transfer.	– Switch the devices off and on again. – If the warning occurs repeatedly, contact SEW-EURODRIVE Service.

Error: 32.14 (200Ehex | 8206dec) Description: Internal communication error		
	Response: FS – warning	
	Cause	Measure
	An error occurred in internal communication.	– Switch the device off and on again. – If the error occurs repeatedly, replace the safety option and send it to SEW-EURODRIVE together with the error number. For further support, contact SEW-EURODRIVE Service.

13.9.9 Error 60 Safe digital input

Fault: 60.19 (3C13hex | 15379dec) Description: F-DI level change "cam slip adjustment" at wrong position		
	Response: FS – input fault	
	Cause	Measure
	F-DI edge detected at wrong position during slip adjustment. This can have the following reasons: – Broken cable. – Line fault. – Faulty parameter setting for slip adjustment.	– Check the cables. – Check the parameter setting for slip adjustment.

33955948/EN – 05/2026

Fault: 60.20 (3C14hex | 15380dec) Description: F-DI Internal fault	
Response: FS – input fault	
Cause	Measure
Fault detected on safety card during internal test of safe digital inputs F-DI.	– Acknowledge the fault. – If the fault occurs repeatedly, replace the safety card and send it together with the fault number to SEW-EURODRIVE. For further support, contact SEW-EURODRIVE Service.

Fault: 60.21 (3C15hex | 15381dec) Description: F-DI Short circuit	
Response: FS – input fault	
Cause	Measure
Short circuit in external wiring of safe digital inputs F-DI.	– Check the external wiring. – Acknowledge the fault.

Fault: 60.22 (3C16hex | 15382dec) Description: F-DI 00/01 Discrepancy error	
Response: FS – input fault	
Cause	Measure
Discrepancy error F-DI 00/01:– The parameterized discrepancy time in 2-channel evaluation of the safe digital inputs F-DI 00/01 has been exceeded, or an error has been detected in a subchannel.– Switch test condition not fulfilled.	– Check the 2-channel switch/sensor connected to the digital input pair F-DI 00/01. – Check the parameter setting of the safety card. If necessary, increase the discrepancy time. – If the switch test function at F-DI 00/01 is active, make sure that the switch test condition is fulfilled before acknowledging the fault. – Acknowledge the fault.

Fault: 60.24 (3C18hex | 15384dec) Description: F-DI 02/03 Discrepancy error	
Response: FS – input fault	
Cause	Measure
Discrepancy fault F-DI 02/03: – Parameterizable discrepancy time in 2-channel evaluation of safe digital inputs F-DI 02/03 exceeded or fault detected in subchannel. – Switch test condition not fulfilled.	– Check the 2-channel switch/sensor connected to the safe digital input pair F-DI 02/03. – Check the parameter setting of the safety card. If necessary, increase the discrepancy time. – If the switch test function at F-DI 02/03 is active, make sure that the switch test condition is fulfilled before acknowledging the fault. – Acknowledge the fault.

33955948/EN – 05/2026

Fault: 60.26 (3C1Ahex | 15386dec) Description: F-DI 04/05 Discrepancy error		
	Response: FS – input fault	
	Cause	Measure
	Discrepancy fault F-DI 04/05: – Parameterizable discrepancy time in 2-channel evaluation of safe digital inputs F-DI 04/05 exceeded or fault detected in subchannel. – Switch test condition not fulfilled.	– Check the 2-channel switch/sensor connected to the safe digital input pair F-DI 04/05. – Check the parameter setting of the safety card. If necessary, increase the discrepancy time. – If the switch test function at F-DI 04/05 is active, make sure that the switch test condition is fulfilled before acknowledging the fault. – Acknowledge the fault.

Fault: 60.28 (3C1Chex | 15388dec) Description: F-DI 06/07 Discrepancy error		
	Response: FS – input fault	
	Cause	Measure
	Discrepancy fault F-DI 06/07: – Parameterizable discrepancy time in 2-channel evaluation of safe digital inputs F-DI 06/07 exceeded or fault detected in subchannel. – Switch test condition not fulfilled.	– Check the 2-channel switch/sensor connected to the safe digital input pair F-DI 06/07. – Check the parameter setting of the safety card. If necessary, increase the discrepancy time. – If the switch test function at F-DI 06/07 is active, make sure that the switch test condition is fulfilled before acknowledging the fault. – Acknowledge the fault.

Fault: 60.32 (3C20hex | 15392dec) Description: F-DI 00 Crossfault		
	Response: FS – input fault	
	Cause	Measure
	Crossfault detected at safe digital input F-DI 00 or plausibility test failed.	– Check the external wiring/connection of safe digital input F-DI 00 for crossfault. – Acknowledge the fault.

Fault: 60.33 (3C21hex | 15393dec) Description: F-DI 01 Crossfault		
	Response: FS – input fault	
	Cause	Measure
	Crossfault detected at safe digital input F-DI 01 or plausibility test failed.	– Check the external wiring/connection of safe digital input F-DI 01 for crossfault. – Acknowledge the fault.

33955948/EN – 05/2026

Fault: 60.34 (3C22hex | 15394dec) Description: F-DI 02 Crossfault		
	Response: FS – input fault	
	Cause	Measure
	Crossfault detected at safe digital input F-DI 02 or plausibility test failed.	– Check the external wiring/connection of safe digital input F-DI 02 for crossfault. – Acknowledge the fault.

Fault: 60.35 (3C23hex | 15395dec) Description: F-DI 03 Crossfault		
	Response: FS – input fault	
	Cause	Measure
	Crossfault detected at safe digital input F-DI 03 or plausibility test failed.	– Check the external wiring/connection of safe digital input F-DI 03 for crossfault. – Acknowledge the fault.

Fault: 60.36 (3C24hex | 15396dec) Description: F-DI 04 Crossfault		
	Response: FS – input fault	
	Cause	Measure
	Crossfault detected at safe digital input F-DI 04 or plausibility test failed.	– Check the external wiring/connection of safe digital input F-DI 04 for crossfault. – Acknowledge the fault.

Fault: 60.37 (3C25hex | 15397dec) Description: F-DI 05 Crossfault		
	Response: FS – input fault	
	Cause	Measure
	Crossfault detected at safe digital input F-DI 05 or plausibility test failed.	– Check the external wiring/connection of safe digital input F-DI 05 for crossfault. – Acknowledge the fault.

Fault: 60.38 (3C26hex | 15398dec) Description: F-DI 06 Crossfault		
	Response: FS – input fault	
	Cause	Measure
	Crossfault detected at safe digital input F-DI 06 or plausibility test failed.	– Check the external wiring/connection of safe digital input F-DI 06 for crossfault. – Acknowledge the fault.

33955948/EN – 05/2026

Fault: 60.39 (3C27hex | 15399dec) Description: F-DI 07 Crossfault		
	Response: FS – input fault	
	Cause	Measure
	Crossfault detected at safe digital input F-DI 07 or plausibility test failed.	– Check the external wiring/connection of safe digital input F-DI 07 for crossfault. – Acknowledge the fault.

Fault: 60.40 (3C28hex | 15400dec) Description: F-DI 00 Connection error		
	Response: FS – input fault	
	Cause	Measure
	Maximum response time exceeded at safe digital input F-DI 00. No stable input signal at F-DI 00 within the parameterized input filter time.	– Check the switch/sensor connected to safe digital input F-DI 00. – Increase the parameter "Input filter time" at F-DI 00. – Acknowledge the fault.

Fault: 60.41 (3C29hex | 15401dec) Description: F-DI 01 Connection error		
	Response: FS – input fault	
	Cause	Measure
	Maximum response time exceeded at safe digital input F-DI 01. No stable input signal at F-DI 01 within the parameterized input filter time.	– Check the switch/sensor connected to safe digital input F-DI 01. – Increase the parameter "Input filter time" at F-DI 01. – Acknowledge the fault.

Fault: 60.42 (3C2Ahex | 15402dec) Description: F-DI 02 Connection error		
	Response: FS – input fault	
	Cause	Measure
	Maximum response time exceeded at safe digital input F-DI 02. No stable input signal at F-DI 02 within parameterized input filter time.	– Check the switch/sensor connected to safe digital input F-DI 02. – Increase the parameter "Input filter time" at F-DI 02. – Acknowledge the fault.

33955948/EN – 05/2026

Fault: 60.43 (3C2Bhex | 15403dec) Description: F-DI 03 Connection error		
	Response: FS – input fault	
	Cause	Measure
	Maximum response time exceeded at safe digital input F-DI 03. No stable input signal at F-DI 03 within parameterized input filter time.	– Check the switch/sensor connected to safe digital input F-DI 03. – Increase the parameter "Input filter time" at F-DI 03. – Acknowledge the fault.

Fault: 60.44 (3C2Chex | 15404dec) Description: F-DI 04 Connection error		
	Response: FS – input fault	
	Cause	Measure
	Maximum response time exceeded at safe digital input F-DI 04. No stable input signal at F-DI 04 within parameterized input filter time.	– Check the switch/sensor connected to safe digital input F-DI 04. – Increase the parameter "Input filter time" at F-DI 04. – Acknowledge the fault.

Fault: 60.45 (3C2Dhex | 15405dec) Description: F-DI 05 Connection error		
	Response: FS – input fault	
	Cause	Measure
	Maximum response time exceeded at safe digital input F-DI 05. No stable input signal at F-DI 05 within parameterized input filter time.	– Check the switch/sensor connected to safe digital input F-DI 05. – Increase the parameter "Input filter time" at F-DI 05. – Acknowledge the fault.

Fault: 60.46 (3C2Ehex | 15406dec) Description: F-DI 06 Connection error		
	Response: FS – input fault	
	Cause	Measure
	Maximum response time exceeded at safe digital input F-DI 06. No stable input signal at F-DI 06 within parameterized input filter time.	– Check the switch/sensor connected to safe digital input F-DI 06. – Increase the parameter "Input filter time" at F-DI 06. – Acknowledge the fault.

33955948/EN – 05/2026

Fault: 60.47 (3C2Fhex | 15407dec) Description: F-DI 07 Connection error		
	Response: FS – input fault	
	Cause	Measure
	Maximum response time exceeded at safe digital input F-DI 07. No stable input signal at F-DI 07 within parameterized input filter time.	– Check the switch/sensor connected to safe digital input F-DI 07. – Increase the parameter "Input filter time" at F-DI 07. – Acknowledge the fault.

13.9.10 Error 61 Safe digital output

Error: 61.01 (3D01hex | 15617dec) Description: F-DO 00 Internal fault		
	Response: FS – output fault	
	Cause	Measure
	Fault in safe digital output F-DO 00 detected on safety card during internal test of safe digital output channels.	– Acknowledge the error. – If the error occurs repeatedly, replace the safety card and send it together with the error number to SEW-EURODRIVE. For further support, contact SEW-EURODRIVE Service.

Error: 61.02 (3D02hex | 15618dec) Description: F-DO 01 Internal fault		
	Response: FS – output fault	
	Cause	Measure
	Fault in safe digital output F-DO 01 detected on safety card during internal test of safe digital output channels.	– Acknowledge the error. – If the error occurs repeatedly, replace the safety card and send it together with the error number to SEW-EURODRIVE. For further support, contact SEW-EURODRIVE Service.

Error: 61.03 (3D03hex | 15619dec) Description: F-DO 02 Internal fault		
	Response: FS – output fault	
	Cause	Measure
	Fault in safe digital output F-DO 02 detected on safety card during internal test of safe digital output channels.	– Acknowledge the error. – If the error occurs repeatedly, replace the safety card and send it together with the error number to SEW-EURODRIVE. For further support, contact SEW-EURODRIVE Service.

33955948/EN – 05/2026

Error: 61.04 (3D04hex | 15620dec) Description: F-DO 03 Internal fault		
	Response: FS – output fault	
	Cause	Measure
	Fault in safe digital output F-DO 03 detected on safety card during internal test of safe digital output channels.	– Acknowledge the error. – If the error occurs repeatedly, replace the safety card and send it together with the error number to SEW-EURODRIVE. For further support, contact SEW-EURODRIVE Service.

Error: 61.05 (3D05hex | 15621dec) Description: F-DO 04 Internal fault		
	Response: FS – output fault	
	Cause	Measure
	Fault in safe digital output F-DO 04 detected on safety card during internal test of safe digital output channels.	– Acknowledge the error. – If the error occurs repeatedly, replace the safety card and send it together with the error number to SEW-EURODRIVE. For further support, contact SEW-EURODRIVE Service.

Error: 61.06 (3D06hex | 15622dec) Description: F-DO 05 Internal fault		
	Response: FS – output fault	
	Cause	Measure
	Fault in safe digital output F-DO 05 detected on safety card during internal test of safe digital output channels.	– Acknowledge the error. – If the error occurs repeatedly, replace the safety card and send it together with the error number to SEW-EURODRIVE. For further support, contact SEW-EURODRIVE Service.

Error: 61.11 (3D0Bhex | 15627dec) Description: F-DO 00_P Short circuit		
	Response: FS – output fault	
	Cause	Measure
	Short circuit in external wiring at P output of safe digital output F-DO 00.	Check the external wiring at the P output of safe digital output F-DO 00 for short circuit.

Error: 61.12 (3D0Chex | 15628dec) Description: F-DO 01_P Short circuit		
	Response: FS – output fault	
	Cause	Measure
	Short circuit in external wiring at P output of safe digital output F-DO 01.	Check the external wiring at the P output of safe digital output F-DO 01 for short circuit.

33955948/EN – 05/2026

Error: 61.13 (3D0Dhex | 15629dec) Description: F-DO 02_P Short circuit		
	Response: FS – output fault	
	Cause	Measure
	Short circuit in external wiring at P output of safe digital output F-DO 02.	Check the external wiring at the P output of safe digital output F-DO 02 for short circuit.

Error: 61.14 (3D0Ehex | 15630dec) Description: F-DO 03_P Short circuit		
	Response: FS – output fault	
	Cause	Measure
	Short circuit in external wiring at P output of safe digital output F-DO 03.	Check the external wiring at the P output of safe digital output F-DO 03 for short circuit.

Error: 61.15 (3D0Fhex | 15631dec) Description: F-DO 04_P Short circuit		
	Response: FS – output fault	
	Cause	Measure
	Short circuit in external wiring at P output of safe digital output F-DO 04.	Check the external wiring at the P output of safe digital output F-DO 04 for short circuit.

Error: 61.16 (3D10hex | 15632dec) Description: F-DO 05_P Short circuit		
	Response: FS – output fault	
	Cause	Measure
	Short circuit in external wiring at P output of safe digital output F-DO 05.	Check the external wiring at the P output of safe digital output F-DO 05 for short circuit.

Error: 61.21 (3D15hex | 15637dec) Description: F-DO 00_M Short circuit		
	Response: FS – output fault	
	Cause	Measure
	Short circuit in external wiring at M output of safe digital output F-DO 00.	Check the external wiring at the M output of safe digital output F-DO 00 for short circuit.

Error: 61.22 (3D16hex | 15638dec) Description: F-DO 01_M Short circuit		
	Response: FS – output fault	
	Cause	Measure
	Short circuit in external wiring at M output of safe digital output F-DO 01.	Check the external wiring at the M output of safe digital output F-DO 01 for short circuit.

33955948/EN – 05/2026

Error: 61.23 (3D17hex | 15639dec) Description: F-DO 02_M Short circuit		
	Response: FS – output fault	
	Cause	Measure
	Short circuit in external wiring at M output of safe digital output F-DO 02.	Check the external wiring at the M output of safe digital output F-DO 02 for short circuit.

Error: 61.24 (3D18hex | 15640dec) Description: F-DO 03_M Short circuit		
	Response: FS – output fault	
	Cause	Measure
	Short circuit in external wiring at M output of safe digital output F-DO 03.	Check the external wiring at the M output of safe digital output F-DO 03 for short circuit.

Error: 61.25 (3D19hex | 15641dec) Description: F-DO 04_M Short circuit		
	Response: FS – output fault	
	Cause	Measure
	Short circuit in external wiring at M output of safe digital output F-DO 04.	Check the external wiring at the M output of safe digital output F-DO 04 for short circuit.

Error: 61.26 (3D1Ahex | 15642dec) Description: F-DO 05_M Short circuit		
	Response: FS – output fault	
	Cause	Measure
	Short circuit in external wiring at M output of safe digital output F-DO 05.	Check the external wiring at the M output of safe digital output F-DO 05 for short circuit.

Error: 61.31 (3D1Fhex | 15647dec) Description: F-DO 00 Crossfault		
	Response: FS – output fault	
	Cause	Measure
	Crossfault detected in external wiring of safe digital output F-DO 00. Excessive capacitive load or test duration too short.	– Check the external wiring of safe digital output F-DO 00 for crossfault. – Check the parameter "Maximum test duration". If the maximum response time enables a longer test duration, set this parameter to a greater value. – Make sure that the capacitance of the connected load does not exceed the value permitted for the output.

33955948/EN – 05/2026

Error: 61.32 (3D20hex | 15648dec) Description: F-DO 01 Crossfault		
	Response: FS – output fault	
	Cause	Measure
	Crossfault detected in external wiring of safe digital output F-DO 01. Excessive capacitive load or test duration too short.	– Check the external wiring of safe digital output F-DO 01 for crossfault. – Check the parameter "Maximum test duration". If the maximum response time enables a longer test duration, set this parameter to a greater value. – Make sure that the capacitance of the connected load does not exceed the value permitted for the output.

Error: 61.33 (3D21hex | 15649dec) Description: F-DO 02 Crossfault		
	Response: FS – output fault	
	Cause	Measure
	Crossfault detected in external wiring of safe digital output F-DO 02. Excessive capacitive load or test duration too short.	– Check the external wiring of safe digital output F-DO 02 for crossfault. – Check the parameter "Maximum test duration". If the maximum response time enables a longer test duration, set this parameter to a greater value. – Make sure that the capacitance of the connected load does not exceed the value permitted for the output.

Error: 61.34 (3D22hex | 15650dec) Description: F-DO 03 Crossfault		
	Response: FS – output fault	
	Cause	Measure
	Crossfault detected in external wiring of safe digital output F-DO 03. Excessive capacitive load or test duration too short.	– Check the external wiring of safe digital output F-DO 03 for crossfault. – Check the parameter "Maximum test duration". If the maximum response time enables a longer test duration, set this parameter to a greater value. – Make sure that the capacitance of the connected load does not exceed the value permitted for the output.

33955948/EN – 05/2026

Error: 61.35 (3D23hex | 15651dec) Description: F-DO 04 Crossfault		
	Response: FS – output fault	
	Cause	Measure
	Crossfault detected in external wiring of safe digital output F-DO 04. Excessive capacitive load or test duration too short.	– Check the external wiring of safe digital output F-DO 04 for crossfault. – Check the parameter "Maximum test duration". If the maximum response time enables a longer test duration, set this parameter to a greater value. – Make sure that the capacitance of the connected load does not exceed the value permitted for the output.

Error: 61.36 (3D24hex | 15652dec) Description: F-DO 05 Crossfault		
	Response: FS – output fault	
	Cause	Measure
	Crossfault detected in external wiring of safe digital output F-DO 05. Excessive capacitive load or test duration too short.	– Check the external wiring of safe digital output F-DO 05 for crossfault. – Check the parameter "Maximum test duration". If the maximum response time enables a longer test duration, set this parameter to a greater value. – Make sure that the capacitance of the connected load does not exceed the value permitted for the output.

Error: 61.41 (3D29hex | 15657dec) Description: F-DO 00_P Overcurrent		
	Response: FS – output fault	
	Cause	Measure
	Permitted output current exceeded at P output of safe digital output F-DO 00.	– Make sure that the current consumption of the connected load does not exceed the permitted output current. If necessary, change the load. – Check the external wiring of safe digital output F-DO 00 for short circuit.

33955948/EN – 05/2026

Error: 61.42 (3D2Ahex | 15658dec) Description: F-DO 01_P Overcurrent		
	Response: FS – output fault	
	Cause	Measure
	Permitted output current exceeded at P output of safe digital output F-DO 01.	– Make sure that the current consumption of the connected load does not exceed the permitted output current. If necessary, change the load. – Check the external wiring of safe digital output F-DO 01 for short circuit.

Error: 61.43 (3D2Bhex | 15659dec) Description: F-DO 02_P Overcurrent		
	Response: FS – output fault	
	Cause	Measure
	Permitted output current exceeded at P output of safe digital output F-DO 02.	– Make sure that the current consumption of the connected load does not exceed the permitted output current. If necessary, change the load. – Check the external wiring of safe digital output F-DO 02 for short circuit.

Error: 61.44 (3D2Chex | 15660dec) Description: F-DO 03_P Overcurrent		
	Response: FS – output fault	
	Cause	Measure
	Permitted output current exceeded at P output of safe digital output F-DO 03.	– Make sure that the current consumption of the connected load does not exceed the permitted output current. If necessary, change the load. – Check the external wiring of safe digital output F-DO 03 for short circuit.

Error: 61.45 (3D2Dhex | 15661dec) Description: F-DO 04_P Overcurrent		
	Response: FS – output fault	
	Cause	Measure
	Permitted output current exceeded at P output of safe digital output F-DO 04.	– Make sure that the current consumption of the connected load does not exceed the permitted output current. If necessary, change the load. – Check the external wiring of safe digital output F-DO 04 for short circuit.

33955948/EN – 05/2026

Error: 61.46 (3D2Ehex | 15662dec) Description: F-DO 05_P Overcurrent		
	Response: FS – output fault	
	Cause	Measure
	Permitted output current exceeded at P output of safe digital output F-DO 05.	– Make sure that the current consumption of the connected load does not exceed the permitted output current. If necessary, change the load. – Check the external wiring of safe digital output F-DO 05 for short circuit.

Error: 61.51 (3D33hex | 15667dec) Description: F-DO 00_M Overcurrent		
	Response: FS – output fault	
	Cause	Measure
	Permitted output current exceeded at M output of safe digital output F-DO 00.	– Make sure that the current consumption of the connected load does not exceed the permitted output current. If necessary, change the load. – Check the external wiring of safe digital output F-DO 00 for short circuit.

Error: 61.52 (3D34hex | 15668dec) Description: F-DO 01_M Overcurrent		
	Response: FS – output fault	
	Cause	Measure
	Permitted output current exceeded at M output of safe digital output F-DO 01.	– Make sure that the current consumption of the connected load does not exceed the permitted output current. If necessary, change the load. – Check the external wiring of safe digital output F-DO 01 for short circuit.

Error: 61.53 (3D35hex | 15669dec) Description: F-DO 02_M Overcurrent		
	Response: FS – output fault	
	Cause	Measure
	Permitted output current exceeded at M output of safe digital output F-DO 02.	– Make sure that the current consumption of the connected load does not exceed the permitted output current. If necessary, change the load. – Check the external wiring of safe digital output F-DO 02 for short circuit.

33955948/EN – 05/2026

Error: 61.54 (3D36hex | 15670dec) Description: F-DO 03_M Overcurrent		
	Response: FS – output fault	
	Cause	Measure
	Permitted output current exceeded at M output of safe digital output F-DO 03.	– Make sure that the current consumption of the connected load does not exceed the permitted output current. If necessary, change the load. – Check the external wiring of safe digital output F-DO 03 for short circuit.

Error: 61.55 (3D37hex | 15671dec) Description: F-DO 04_M Overcurrent		
	Response: FS – output fault	
	Cause	Measure
	Permitted output current exceeded at M output of safe digital output F-DO 04.	– Make sure that the current consumption of the connected load does not exceed the permitted output current. If necessary, change the load. – Check the external wiring of safe digital output F-DO 04 for short circuit.

Error: 61.56 (3D38hex | 15672dec) Description: F-DO 05_M Overcurrent		
	Response: FS – output fault	
	Cause	Measure
	Permitted output current exceeded at M output of safe digital output F-DO 05.	– Make sure that the current consumption of the connected load does not exceed the permitted output current. If necessary, change the load. – Check the external wiring of safe digital output F-DO 05 for short circuit.

Error: 61.61 (3D3Dhex | 15677dec) Description: F-DO 00 Wire break		
	Response: FS – output fault	
	Cause	Measure
	Interruption in output circuit of safe digital output F-DO 00.	Check the external wiring at safe digital output F-DO 00: – Check the load. – Check the wiring for wire break. – Make sure that the lowest current consumption of the connected load does not drop below the minimum load required for wire break monitoring.

Error: 61.62 (3D3Ehex | 15678dec) Description: F-DO 01 Wire break		
	Response: FS – output fault	
	Cause	Measure
	Interruption in output circuit of safe digital output F-DO 01.	Check the external wiring at safe digital output F-DO 01: – Check the load. – Check the wiring for wire break. – Make sure that the lowest current consumption of the connected load does not drop below the minimum load required for wire break monitoring.

Error: 61.63 (3D3Fhex | 15679dec) Description: F-DO 02 Wire break		
	Response: FS – output fault	
	Cause	Measure
	Interruption in output circuit of safe digital output F-DO 02.	Check the external wiring at safe digital output F-DO 02: – Check the load. – Check the wiring for wire break. – Make sure that the lowest current consumption of the connected load does not drop below the minimum load required for wire break monitoring.

Error: 61.64 (3D40hex | 15680dec) Description: F-DO 03 Wire break		
	Response: FS – output fault	
	Cause	Measure
	Interruption in output circuit of safe digital output F-DO 03.	Check the external wiring at safe digital output F-DO 03: – Check the load. – Check the wiring for wire break. – Make sure that the lowest current consumption of the connected load does not drop below the minimum load required for wire break monitoring.

33955948/EN – 05/2026

Error: 61.65 (3D41hex | 15681dec) Description: F-DO 04 Wire break		
	Response: FS – output fault	
	Cause	Measure
	Interruption in output circuit of safe digital output F-DO 04.	Check the external wiring at safe digital output F-DO 04: – Check the load. – Check the wiring for wire break. – Make sure that the lowest current consumption of the connected load does not drop below the minimum load required for wire break monitoring.

Error: 61.66 (3D42hex | 15682dec) Description: F-DO 05 Wire break		
	Response: FS – output fault	
	Cause	Measure
	Interruption in output circuit of safe digital output F-DO 05.	Check the external wiring at safe digital output F-DO 05: – Check the load. – Check the wiring for wire break. – Make sure that the lowest current consumption of the connected load does not drop below the minimum load required for wire break monitoring.

Error: 61.71 (3D47hex | 15687dec) Description: F-DO 00 Inductive load		
	Response: FS – output fault	
	Cause	Measure
	Inductance of load connected to safe digital output F-DO 00 too large, or no freewheeling diode present.	Check the external wiring at safe digital output F-DO 00: – If the load has an inductance, make sure that a freewheeling diode is present. – Check the freewheeling diode for correct function.

Error: 61.72 (3D48hex | 15688dec) Description: F-DO 01 Inductive load		
	Response: FS – output fault	
	Cause	Measure
	Inductance of load connected to safe digital output F-DO 01 too large, or no freewheeling diode present.	Check the external wiring at safe digital output F-DO 01: – If the load has an inductance, make sure that a freewheeling diode is present. – Check the freewheeling diode for correct function.

Error: 61.73 (3D49hex | 15689dec) Description: F-DO 02 Inductive load		
	Response: FS – output fault	
	Cause	Measure
	Inductance of load connected to safe digital output F-DO 02 too large, or no freewheeling diode present.	Check the external wiring at safe digital output F-DO 02: – If the load has an inductance, make sure that a freewheeling diode is present. – Check the freewheeling diode for correct function.

Error: 61.74 (3D4Ahex | 15690dec) Description: F-DO 03 Inductive load		
	Response: FS – output fault	
	Cause	Measure
	Inductance of load connected to safe digital output F-DO 03 too large, or no freewheeling diode present.	Check the external wiring at safe digital output F-DO 03: – If the load has an inductance, make sure that a freewheeling diode is present. – Check the freewheeling diode for correct function.

Error: 61.75 (3D4Bhex | 15691dec) Description: F-DO 04 Inductive load		
	Response: FS – output fault	
	Cause	Measure
	Inductance of load connected to safe digital output F-DO 04 too large, or no freewheeling diode present.	Check the external wiring at safe digital output F-DO 04: – If the load has an inductance, make sure that a freewheeling diode is present. – Check the freewheeling diode for correct function.

Error: 61.76 (3D4Chex | 15692dec) Description: F-DO 05 Inductive load		
	Response: FS – output fault	
	Cause	Measure
	Inductance of load connected to safe digital output F-DO 05 too large, or no freewheeling diode present.	Check the external wiring at safe digital output F-DO 05: – If the load has an inductance, make sure that a freewheeling diode is present. – Check the freewheeling diode for correct function.

33955948/EN – 05/2026

Error: 61.81 (3D51hex | 15697dec) Description: F-DO 00 Excessive cyclic switching		
	Response: FS – output fault	
	Cause	Measure
	Failed to complete self-tests at safe digital output F-DO 00 because of excessive cyclic switching.	Make sure that safe digital output F-DO 00 is open or closed at least once for at least 2 seconds within 60 seconds.

Error: 61.82 (3D52hex | 15698dec) Description: F-DO 01 Excessive cyclic switching		
	Response: FS – output fault	
	Cause	Measure
	Failed to complete self-tests at safe digital output F-DO 01 because of excessive cyclic switching.	Make sure that safe digital output F-DO 01 is open or closed at least once for at least 2 seconds within 60 seconds.

Error: 61.83 (3D53hex | 15699dec) Description: F-DO 02 Excessive cyclic switching		
	Response: FS – output fault	
	Cause	Measure
	Failed to complete self-tests at safe digital output F-DO 02 because of excessive cyclic switching.	Make sure that safe digital output F-DO 02 is open or closed at least once for at least 2 seconds within 60 seconds.

Error: 61.84 (3D54hex | 15700dec) Description: F-DO 03 Excessive cyclic switching		
	Response: FS – output fault	
	Cause	Measure
	Failed to complete self-tests at safe digital output F-DO 03 because of excessive cyclic switching.	Make sure that safe digital output F-DO 03 is open or closed at least once for at least 2 seconds within 60 seconds.

Error: 61.85 (3D55hex | 15701dec) Description: F-DO 04 Excessive cyclic switching		
	Response: FS – output fault	
	Cause	Measure
	Failed to complete self-tests at safe digital output F-DO 04 because of excessive cyclic switching.	Make sure that safe digital output F-DO 04 is open or closed at least once for at least 2 seconds within 60 seconds.

33955948/EN – 05/2026

Error: 61.86 (3D56hex | 15702dec) Description: F-DO 05 Excessive cyclic switching		
	Response: FS – output fault	
	Cause	Measure
	Failed to complete self-tests at safe digital output F-DO 05 because of excessive cyclic switching.	Make sure that safe digital output F-DO 05 is open or closed at least once for at least 2 seconds within 60 seconds.

Error: 61.87 (3D57hex | 15703dec) Description: F-DO 00 Undervoltage DC 24 V during diagnostics		
	Response: FS – output fault	
	Cause	Measure
	An undervoltage of the DC 24 V supply voltage was detected during diagnostics of the safe digital output F-DO 00.	– Check the DC 24 V supply voltage (permitted voltage range, voltage dips). – If the error occurs repeatedly, replace the safety card and send it together with the error number to SEW-EURODRIVE. For further support, contact SEW-EURODRIVE Service.

Error: 61.93 (3D5Dhex | 15709dec) Description: F-DO Fault during external watchdog diagnostics		
	Response: FS – output fault	
	Cause	Measure
	Error detected in F-DO state during external watchdog diagnostics.	– Switch the device off and on again. – If the error occurs repeatedly, replace the safety card and send it together with the error number to SEW-EURODRIVE. For further support, contact SEW-EURODRIVE Service.

13.9.11 Error 62 STO output

Error: 62.01 (3E01hex | 15873dec) Description: Short circuit at STO terminals		
	Response: FS – output fault	
	Cause	Measure
	Short circuit between STO terminal and ground.	– Make sure that no external signals are connected to the STO terminals. – Make sure that the STO terminals are not connected if the safety option is present (e.g. jumper plug must be removed).

33955948/EN – 05/2026

Error: 62.02 (3E02hex | 15874dec) Description: Crossfault at STO terminals		
	Response: FS – output fault	
	Cause	Measure
	Crossfault between an STO terminal and external voltage.	– Make sure that no external signals are connected to the STO terminals. – Make sure that the STO terminals are not connected if the safety option is present (e.g. jumper plug must be removed).

Error: 62.03 (3E03hex | 15875dec) Description: STO circuit internal fault		
	Response: FS – output fault	
	Cause	Measure
	Error detected in STO circuit of device.	– Make sure that no external signals are connected to terminal STO. – Make sure that terminal STO is not connected (e.g. jumper plug must be removed). – Switch the device off and on again. – If the error occurs repeatedly, replace the device and send it together with the error number to SEW-EURODRIVE. For further support, contact SEW-EURODRIVE Service.

Error: 62.04 (3E04hex | 15876dec) Description: Extended diagnostics STO: Test interval exceeded		
	Response: FS – warning	
	Cause	Measure
	User fault: The parameter "Extended diagnostics STO" is set to "Test when deactivated and time monitoring". But no test has been performed within 8 hours.	– Activate and deactivate the STO drive safety subfunction at least once within 8 hours. – If time monitoring is not needed for the "Extended diagnostics STO" function, deactivate the function.

Error: 62.05 (3E05hex | 15877dec) Description: Excessive cyclic switching		
	Response: FS – output fault	
	Cause	Measure
	Failed to complete diagnostics because of excessive cyclic switching.	– Check the application. – Make sure that the STO safety subfunction is active or inactive at least once for 2.5 seconds within 60 seconds.

Error: 62.06 (3E06hex | 15878dec) Description: STO control internal fault		
	Response: FS – output fault	
	Cause	Measure
	Fault detected on safety card by internal test of STO control.	If the error occurs repeatedly, replace the device and send it together with the error number to SEW-EURODRIVE. For further support, contact SEW-EURODRIVE Service.

Error: 62.07 (3E07hex | 15879dec) Description: Undervoltage DC 24 V during diagnostics	
Response: FS – output fault	
Cause	Measure
An undervoltage of the DC 24 V supply voltage was detected during diagnostics.	– Check the DC 24 supply voltage (permitted voltage range, voltage dips). – If the error occurs repeatedly, replace the device and send it together with the error number to SEW-EURODRIVE, or replace the voltage supply. For further support, contact SEW-EURODRIVE Service.

Error: 62.93 (3E5Dhex | 15965dec) Description: STO fault during external watchdog diagnostics	
Response: FS – output fault	
Cause	Measure
Error detected in STO state during external watchdog diagnostics.	– Switch the device off and on again. – Make sure that no external signals are connected to terminal X6 (STO). – Make sure that terminal X6 (STO) is not connected (e.g. jumper plug must be removed). – If the error occurs repeatedly, replace the safety card and send it together with the error number to SEW-EURODRIVE. For further support, contact SEW-EURODRIVE Service.

13.9.12 Error 63 Speed-dependent drive safety function

Error: 63.01 (3F01hex | 16129dec) Description: SLS 1 limit speed exceeded in positive direction of movement	
Response: FS – warning	
Cause	Measure
Limit speed SLS 1 exceeded in positive direction of movement.	– Check the speed setpoint of the application with the safety subfunction active, and adjust if necessary. – Check the parameterization of the safety card (limit speed SLS 1), and adjust if necessary.

33955948/EN – 05/2026

Error: 63.02 (3F02hex | 16130dec) Description: SLS 2 limit speed exceeded in positive direction of movement		
	Response: FS – warning	
	Cause	Measure
	Limit speed SLS 2 exceeded in positive direction of movement.	– Check the speed setpoint of the application with the safety subfunction active, and adjust if necessary. – Check the parameterization of the safety card (limit speed SLS 2), and adjust if necessary.

Error: 63.03 (3F03hex | 16131dec) Description: SLS 3 limit speed exceeded in positive direction of movement		
	Response: FS – warning	
	Cause	Measure
	Limit speed SLS 3 exceeded in positive direction of movement.	– Check the speed setpoint of the application with the safety subfunction active, and adjust if necessary. – Check the parameterization of the safety card (limit speed SLS 3), and adjust if necessary.

Error: 63.04 (3F04hex | 16132dec) Description: SLS 4 limit speed exceeded in positive direction of movement		
	Response: FS – warning	
	Cause	Measure
	Limit speed SLS 4 exceeded in positive direction of movement.	– Check the speed setpoint of the application with the safety subfunction active, and adjust if necessary. – Check the parameterization of the safety card (limit speed SLS 4), and adjust if necessary.

Error: 63.05 (3F05hex | 16133dec) Description: SLS 1 limit speed exceeded in negative direction of movement		
	Response: FS – warning	
	Cause	Measure
	Limit speed SLS 1 exceeded in negative direction of movement.	– Check the speed setpoint of the application with the safety subfunction active, and adjust if necessary. – Check the parameterization of the safety card (limit speed SLS 1), and adjust if necessary.

33955948/EN – 05/2026

Error: 63.06 (3F06hex | 16134dec) Description: SLS 2 limit speed exceeded in negative direction of movement		
	Response: FS – warning	
	Cause	Measure
	Limit speed SLS 2 exceeded in negative direction of movement.	– Check the speed setpoint of the application with the safety subfunction active, and adjust if necessary. – Check the parameterization of the safety card (limit speed SLS 2), and adjust if necessary.

Error: 63.07 (3F07hex | 16135dec) Description: SLS 3 limit speed exceeded in negative direction of movement		
	Response: FS – warning	
	Cause	Measure
	Limit speed SLS 3 exceeded in negative direction of movement.	– Check the speed setpoint of the application with the safety subfunction active, and adjust if necessary. – Check the parameterization of the safety card (limit speed SLS 3), and adjust if necessary.

Error: 63.08 (3F08hex | 16136dec) Description: SLS 4 limit speed exceeded in negative direction of movement		
	Response: FS – warning	
	Cause	Measure
	Limit speed SLS 4 exceeded in negative direction of movement.	– Check the speed setpoint of the application with the safety subfunction active, and adjust if necessary. – Check the parameterization of the safety card (limit speed SLS 4), and adjust if necessary.

Error: 63.09 (3F09hex | 16137dec) Description: SLS maximum speed exceeded in positive direction of movement		
	Response: FS – warning	
	Cause	Measure
	Maximum speed SLS exceeded in positive direction of movement during monitoring delay.	– Check the maximum speed of the application while the safety subfunction is active, and adjust if necessary. – Check the parameterization of the safety card (maximum speed), and adjust if necessary.

33955948/EN – 05/2026

Error: 63.13 (3F0Dhex | 16141dec) Description: SLS maximum speed exceeded in negative direction of movement	
Response: FS – warning	
Cause	Measure
Maximum speed SLS exceeded in negative direction of movement during monitoring delay.	– Check the maximum speed of the application while the safety subfunction is active, and adjust if necessary. – Check the parameterization of the safety card (maximum speed), and adjust if necessary.

Error: 63.17 (3F11hex | 16145dec) Description: SLS 1 limit speed exceeded in positive direction of movement during deceleration	
Response: FS – warning	
Cause	Measure
Limit speed SLS 1 exceeded in positive direction of movement during deceleration.	– Check deceleration, jerk time, and ramp type of the application while the safety subfunction is active, and adjust if necessary. – Check the parameterization of the safety card (deceleration SLS 1, jerk time SLS 1, ramp type SLS 1), and adjust if necessary.

Error: 63.18 (3F12hex | 16146dec) Description: SLS 2 limit speed exceeded in positive direction of movement during deceleration	
Response: FS – warning	
Cause	Measure
Limit speed SLS 2 exceeded in positive direction of movement during deceleration.	– Check deceleration, jerk time, and ramp type of the application while the safety subfunction is active, and adjust if necessary. – Check the parameterization of the safety card (deceleration SLS 2, jerk time SLS 2, ramp type SLS 2), and adjust if necessary.

Error: 63.19 (3F13hex | 16147dec) Description: SLS 3 limit speed exceeded in positive direction of movement during deceleration	
Response: FS – warning	
Cause	Measure
Limit speed SLS 3 exceeded in positive direction of movement during deceleration.	– Check deceleration, jerk time, and ramp type of the application while the safety subfunction is active, and adjust if necessary. – Check the parameterization of the safety card (deceleration SLS 3, jerk time SLS 3, ramp type SLS 3), and adjust if necessary.

33955948/EN – 05/2026

Error: 63.20 (3F14hex | 16148dec) Description: SLS 4 limit speed exceeded in positive direction of movement during deceleration		
	Response: FS – warning	
	Cause	Measure
	Limit speed SLS 4 exceeded in positive direction of movement during deceleration.	– Check deceleration, jerk time, and ramp type of the application while the safety subfunction is active, and adjust if necessary. – Check the parameterization of the safety card (deceleration SLS 4, jerk time SLS 4, ramp type SLS 4), and adjust if necessary.

Error: 63.21 (3F15hex | 16149dec) Description: SLS 1 limit speed exceeded in negative direction of movement during deceleration		
	Response: FS – warning	
	Cause	Measure
	Limit speed SLS 1 exceeded in negative direction of movement during deceleration.	– Check deceleration, jerk time, and ramp type of the application while the safety subfunction is active, and adjust if necessary. – Check the parameterization of the safety card (deceleration SLS 1, jerk time SLS 1, ramp type SLS 1), and adjust if necessary.

Error: 63.22 (3F16hex | 16150dec) Description: SLS 2 limit speed exceeded in negative direction of movement during deceleration		
	Response: FS – warning	
	Cause	Measure
	Limit speed SLS 2 exceeded in negative direction of movement during deceleration.	– Check deceleration, jerk time, and ramp type of the application while the safety subfunction is active, and adjust if necessary. – Check the parameterization of the safety card (deceleration SLS 2, jerk time SLS 2, ramp type SLS 2), and adjust if necessary.

Error: 63.23 (3F17hex | 16151dec) Description: SLS 3 limit speed exceeded in negative direction of movement during deceleration		
	Response: FS – warning	
	Cause	Measure
	Limit speed SLS 3 exceeded in negative direction of movement during deceleration.	– Check deceleration, jerk time, and ramp type of the application while the safety subfunction is active, and adjust if necessary. – Check the parameterization of the safety card (deceleration SLS 3, jerk time SLS 3, ramp type SLS 3), and adjust if necessary.

33955948/EN – 05/2026

Error: 63.24 (3F18hex | 16152dec) Description: SLS 4 limit speed exceeded in negative direction of movement during deceleration		
	Response: FS – warning	
	Cause	Measure
	Limit speed SLS 4 exceeded in negative direction of movement during deceleration.	– Check deceleration, jerk time, and ramp type of the application while the safety subfunction is active, and adjust if necessary. – Check the parameterization of the safety card (deceleration SLS 4, jerk time SLS 4, ramp type SLS 4), and adjust if necessary.

Error: 63.25 (3F19hex | 16153dec) Description: SSM 1 limit speed exceeded in positive direction of movement		
	Response: FS – warning	
	Cause	Measure
	Limit speed SSM 1 exceeded in positive direction of movement.	– Check the speed setpoint of the application with the safety subfunction active, and adjust if necessary. – Check the limit speed of the safety card (limit speed SSM 1), and adjust if necessary.

Error: 63.26 (3F1Ahex | 16154dec) Description: SSM 2 limit speed exceeded in positive direction of movement		
	Response: FS – warning	
	Cause	Measure
	Limit speed SSM 2 exceeded in positive direction of movement.	– Check the speed setpoint of the application with the safety subfunction active, and adjust if necessary. – Check the limit speed of the safety card (limit speed SSM 2), and adjust if necessary.

Error: 63.27 (3F1Bhex | 16155dec) Description: SSM 3 limit speed exceeded in positive direction of movement		
	Response: FS – warning	
	Cause	Measure
	Limit speed SSM 3 exceeded in positive direction of movement.	– Check the speed setpoint of the application with the safety subfunction active, and adjust if necessary. – Check the limit speed of the safety card (limit speed SSM 3), and adjust if necessary.

Error: 63.28 (3F1Chex | 16156dec) Description: SSM 4 limit speed exceeded in positive direction of movement		
	Response: FS – warning	
	Cause	Measure
	Limit speed SSM 4 exceeded in positive direction of movement.	– Check the speed setpoint of the application with the safety subfunction active, and adjust if necessary. – Check the limit speed of the safety card (limit speed SSM 4), and adjust if necessary.

Error: 63.29 (3F1Dhex | 16157dec) Description: SSM 1 limit speed exceeded in negative direction of movement		
	Response: FS – warning	
	Cause	Measure
	Limit speed SSM 1 exceeded in negative direction of movement.	– Check the speed setpoint of the application with the safety subfunction active, and adjust if necessary. – Check the limit speed of the safety card (limit speed SSM 1), and adjust if necessary.

Error: 63.30 (3F1Ehex | 16158dec) Description: SSM 2 limit speed exceeded in negative direction of movement		
	Response: FS – warning	
	Cause	Measure
	Limit speed SSM 2 exceeded in negative direction of movement.	– Check the speed setpoint of the application with the safety subfunction active, and adjust if necessary. – Check the limit speed of the safety card (limit speed SSM 2), and adjust if necessary.

Error: 63.31 (3F1Fhex | 16159dec) Description: SSM 3 limit speed exceeded in negative direction of movement		
	Response: FS – warning	
	Cause	Measure
	Limit speed SSM 3 exceeded in negative direction of movement.	– Check the speed setpoint of the application with the safety subfunction active, and adjust if necessary. – Check the limit speed of the safety card (limit speed SSM 3), and adjust if necessary.

33955948/EN – 05/2026

Error: 63.32 (3F20hex | 16160dec) Description: SSM 4 limit speed exceeded in negative direction of movement		
	Response: FS – warning	
	Cause	Measure
	Limit speed SSM 4 exceeded in negative direction of movement.	– Check the speed setpoint of the application with the safety subfunction active, and adjust if necessary. – Check the limit speed of the safety card (limit speed SSM 4), and adjust if necessary.

Error: 63.33 (3F21hex | 16161dec) Description: SSx maximum speed exceeded in positive direction of movement		
	Response: FS – warning	
	Cause	Measure
	Maximum speed SSx exceeded in positive direction of movement during monitoring delay.	– Check the maximum speed of the application while the safety subfunction is active, and adjust if necessary. – Check the parameterization of the safety card (maximum speed), and adjust if necessary.

Error: 63.41 (3F29hex | 16169dec) Description: SSx maximum speed exceeded in negative direction of movement		
	Response: FS – warning	
	Cause	Measure
	Maximum speed SSx exceeded in negative direction of movement during monitoring delay.	– Check the maximum speed of the application while the safety subfunction is active, and adjust if necessary. – Check the parameterization of the safety card (maximum speed), and adjust if necessary.

Error: 63.49 (3F31hex | 16177dec) Description: SSx 1 limit speed exceeded in positive direction of movement during deceleration		
	Response: FS – warning	
	Cause	Measure
	Limit speed SSx 1 exceeded in positive direction of movement during deceleration.	– Check deceleration, jerk time, and ramp type of the application while the safety subfunction is active, and adjust if necessary. – Check the parameterization of the safety card (deceleration SSx 1, jerk time SSx 1, ramp type SSx 1), and adjust if necessary.

33955948/EN – 05/2026

Error: 63.50 (3F32hex | 16178dec) Description: SSx 2 limit speed exceeded in positive direction of movement during deceleration		
	Response: FS – warning	
	Cause	Measure
	Limit speed SSx 2 exceeded in positive direction of movement during deceleration.	– Check deceleration, jerk time, and ramp type of the application while the safety subfunction is active, and adjust if necessary. – Check the parameterization of the safety card (deceleration SSx 2, jerk time SSx 2, ramp type SSx 2), and adjust if necessary.

Error: 63.51 (3F33hex | 16179dec) Description: SSx 3 limit speed exceeded in positive direction of movement during deceleration		
	Response: FS – warning	
	Cause	Measure
	Limit speed SSx 3 exceeded in positive direction of movement during deceleration.	– Check deceleration, jerk time, and ramp type of the application while the safety subfunction is active, and adjust if necessary. – Check the parameterization of the safety card (deceleration SSx 3, jerk time SSx 3, ramp type SSx 3), and adjust if necessary.

Error: 63.52 (3F34hex | 16180dec) Description: SSx 4 limit speed exceeded in positive direction of movement during deceleration		
	Response: FS – warning	
	Cause	Measure
	Limit speed SSx 4 exceeded in positive direction of movement during deceleration.	– Check deceleration, jerk time, and ramp type of the application while the safety subfunction is active, and adjust if necessary. – Check the parameterization of the safety card (deceleration SSx 4, jerk time SSx 4, ramp type SSx 4), and adjust if necessary.

Error: 63.53 (3F35hex | 16181dec) Description: SSx 5 limit speed exceeded in positive direction of movement during deceleration		
	Response: FS – warning	
	Cause	Measure
	Limit speed SSx 5 exceeded in positive direction of movement during deceleration.	– Check deceleration, jerk time, and ramp type of the application while the safety subfunction is active, and adjust if necessary. – Check the parameterization of the safety card (deceleration SSx 5, jerk time SSx 5, ramp type SSx 5), and adjust if necessary.

33955948/EN – 05/2026

Error: 63.54 (3F36hex | 16182dec) Description: SSx 6 limit speed exceeded in positive direction of movement during deceleration		
	Response: FS – warning	
	Cause	Measure
	Limit speed SSx 6 exceeded in positive direction of movement during deceleration.	– Check deceleration, jerk time, and ramp type of the application while the safety subfunction is active, and adjust if necessary. – Check the parameterization of the safety card (deceleration SSx 6, jerk time SSx 6, ramp type SSx 6), and adjust if necessary.

Error: 63.55 (3F37hex | 16183dec) Description: SSx 7 limit speed exceeded in positive direction of movement during deceleration		
	Response: FS – warning	
	Cause	Measure
	Limit speed SSx 7 exceeded in positive direction of movement during deceleration.	– Check deceleration, jerk time, and ramp type of the application while the safety subfunction is active, and adjust if necessary. – Check the parameterization of the safety card (deceleration SSx 7, jerk time SSx 7, ramp type SSx 7), and adjust if necessary.

Error: 63.56 (3F38hex | 16184dec) Description: SSx 8 limit speed exceeded in positive direction of movement during deceleration		
	Response: FS – warning	
	Cause	Measure
	Limit speed SSx 8 exceeded in positive direction of movement during deceleration.	– Check deceleration, jerk time, and ramp type of the application while the safety subfunction is active, and adjust if necessary. – Check the parameterization of the safety card (deceleration SSx 8, jerk time SSx 8, ramp type SSx 8), and adjust if necessary.

Error: 63.57 (3F39hex | 16185dec) Description: SSx 1 limit speed exceeded in negative direction of movement during deceleration		
	Response: FS – warning	
	Cause	Measure
	Limit speed SSx 1 exceeded in negative direction of movement during deceleration.	– Check deceleration, jerk time, and ramp type of the application while the safety subfunction is active, and adjust if necessary. – Check the parameterization of the safety card (deceleration SSx 1, jerk time SSx 1, ramp type SSx 1), and adjust if necessary.

33955948/EN – 05/2026

Error: 63.58 (3F3Ahex | 16186dec) Description: SSx 2 limit speed exceeded in negative direction of movement during deceleration	
Response: FS – warning	
Cause	Measure
Limit speed SSx 2 exceeded in negative direction of movement during deceleration.	– Check deceleration, jerk time, and ramp type of the application while the safety subfunction is active, and adjust if necessary. – Check the parameterization of the safety card (deceleration SSx 2, jerk time SSx 2, ramp type SSx 2), and adjust if necessary.

Error: 63.59 (3F3Bhex | 16187dec) Description: SSx 3 limit speed exceeded in negative direction of movement during deceleration	
Response: FS – warning	
Cause	Measure
Limit speed SSx 3 exceeded in negative direction of movement during deceleration.	– Check deceleration, jerk time, and ramp type of the application while the safety subfunction is active, and adjust if necessary. – Check the parameterization of the safety card (deceleration SSx 3, jerk time SSx 3, ramp type SSx 3), and adjust if necessary.

Error: 63.60 (3F3Chex | 16188dec) Description: SSx 4 limit speed exceeded in negative direction of movement during deceleration	
Response: FS – warning	
Cause	Measure
Limit speed SSx 4 exceeded in negative direction of movement during deceleration.	– Check deceleration, jerk time, and ramp type of the application while the safety subfunction is active, and adjust if necessary. – Check the parameterization of the safety card (deceleration SSx 4, jerk time SSx 4, ramp type SSx 4), and adjust if necessary.

Error: 63.61 (3F3Dhex | 16189dec) Description: SSx 5 limit speed exceeded in negative direction of movement during deceleration	
Response: FS – warning	
Cause	Measure
Limit speed SSx 5 exceeded in negative direction of movement during deceleration.	– Check deceleration, jerk time, and ramp type of the application while the safety subfunction is active, and adjust if necessary. – Check the parameterization of the safety card (deceleration SSx 5, jerk time SSx 5, ramp type SSx 5), and adjust if necessary.

33955948/EN – 05/2026

Error: 63.62 (3F3Ehex | 16190dec) Description: SSx 6 limit speed exceeded in negative direction of movement during deceleration		
	Response: FS – warning	
	Cause	Measure
	Limit speed SSx 6 exceeded in negative direction of movement during deceleration.	– Check deceleration, jerk time, and ramp type of the application while the safety subfunction is active, and adjust if necessary. – Check the parameterization of the safety card (deceleration SSx 6, jerk time SSx 6, ramp type SSx 6), and adjust if necessary.

Error: 63.63 (3F3Fhex | 16191dec) Description: SSx 7 limit speed exceeded in negative direction of movement during deceleration		
	Response: FS – warning	
	Cause	Measure
	Limit speed SSx 7 exceeded in negative direction of movement during deceleration.	– Check deceleration, jerk time, and ramp type of the application while the safety subfunction is active, and adjust if necessary. – Check the parameterization of the safety card (deceleration SSx 7, jerk time SSx 7, ramp type SSx 7), and adjust if necessary.

Error: 63.64 (3F40hex | 16192dec) Description: SSx 8 limit speed exceeded in negative direction of movement during deceleration		
	Response: FS – warning	
	Cause	Measure
	Limit speed SSx 8 exceeded in negative direction of movement during deceleration.	– Check deceleration, jerk time, and ramp type of the application while the safety subfunction is active, and adjust if necessary. – Check the parameterization of the safety card (deceleration SSx 8, jerk time SSx 8, ramp type SSx 8), and adjust if necessary.

Error: 63.65 (3F41hex | 16193dec) Description: SSR 1 upper limit speed exceeded		
	Response: FS – warning	
	Cause	Measure
	Upper limit speed SSR 1 exceeded.	– Check the speed setpoint of the application with the safety subfunction active, and adjust if necessary. – Check the parameterization of the safety card (upper limit speed SSR 1), and adjust if necessary.

Error: 63.66 (3F42hex | 16194dec) Description: SSR 2 upper limit speed exceeded		
	Response: FS – warning	
	Cause	Measure
	Upper limit speed SSR 2 exceeded.	– Check the speed setpoint of the application with the safety subfunction active, and adjust if necessary. – Check the parameterization of the safety card (upper limit speed SSR 2), and adjust if necessary.

Error: 63.67 (3F43hex | 16195dec) Description: SSR 3 upper limit speed exceeded		
	Response: FS – warning	
	Cause	Measure
	Upper limit speed SSR 3 exceeded.	– Check the speed setpoint of the application with the safety subfunction active, and adjust if necessary. – Check the parameterization of the safety card (upper limit speed SSR 3), and adjust if necessary.

Error: 63.68 (3F44hex | 16196dec) Description: SSR 4 upper limit speed exceeded		
	Response: FS – warning	
	Cause	Measure
	Upper limit speed SSR 4 exceeded.	– Check the speed setpoint of the application with the safety subfunction active, and adjust if necessary. – Check the parameterization of the safety card (upper limit speed SSR 4), and adjust if necessary.

Error: 63.69 (3F45hex | 16197dec) Description: SSR 1 lower limit speed exceeded		
	Response: FS – warning	
	Cause	Measure
	Lower limit speed SSR 1 exceeded.	– Check the speed setpoint of the application with the safety subfunction active, and adjust if necessary. – Check the parameterization of the safety card (lower limit speed SSR 1), and adjust if necessary.

33955948/EN – 05/2026

Error: 63.70 (3F46hex | 16198dec) Description: SSR 2 lower limit speed exceeded		
	Response: FS – warning	
	Cause	Measure
	Lower limit speed SSR 2 exceeded.	– Check the speed setpoint of the application with the safety subfunction active, and adjust if necessary. – Check the parameterization of the safety card (lower limit speed SSR 2), and adjust if necessary.

Error: 63.71 (3F47hex | 16199dec) Description: SSR 3 lower limit speed exceeded		
	Response: FS – warning	
	Cause	Measure
	Lower limit speed SSR 3 exceeded.	– Check the speed setpoint of the application with the safety subfunction active, and adjust if necessary. – Check the parameterization of the safety card (lower limit speed SSR 3), and adjust if necessary.

Error: 63.72 (3F48hex | 16200dec) Description: SSR 4 lower limit speed exceeded		
	Response: FS – warning	
	Cause	Measure
	Lower limit speed SSR 4 exceeded.	– Check the speed setpoint of the application with the safety subfunction active, and adjust if necessary. – Check the parameterization of the safety card (lower limit speed SSR 4), and adjust if necessary.

Error: 63.73 (3F49hex | 16201dec) Description: SSR maximum speed exceeded in positive direction of movement		
	Response: FS – warning	
	Cause	Measure
	Maximum speed SSR exceeded in positive direction of movement during monitoring delay.	– Check the maximum speed of the application while the safety subfunction is active, and adjust if necessary. – Check the parameterization of the safety card (maximum speed), and adjust if necessary.

Error: 63.74 (3F4Ahex | 16202dec) Description: SSR maximum speed exceeded in negative direction of movement		
	Response: FS – warning	
	Cause	Measure
	Maximum speed SSR exceeded in negative direction of movement during monitoring delay.	– Check the maximum speed of the application while the safety subfunction is active, and adjust if necessary. – Check the parameterization of the safety card (maximum speed), and adjust if necessary.

13.9.13 Error 64 Position-dependent drive safety function

Error: 64.01 (4001hex | 16385dec) Description: SDI 1 limit position exceeded in blocked direction of movement		
	Response: FS – warning	
	Cause	Measure
	Limit position SDI 1 exceeded in blocked direction of movement.	– Check the direction of movement of the application with the safety subfunction active, and adjust if necessary. – Check the parameterization of the safety card (permitted direction of movement SDI 1, tolerance SDI 1) and adjust if necessary.

Error: 64.02 (4002hex | 16386dec) Description: SDI 2 limit position exceeded in blocked direction of movement		
	Response: FS – warning	
	Cause	Measure
	Limit position SDI 2 exceeded in blocked direction of movement.	– Check the direction of movement of the application with the safety subfunction active, and adjust if necessary. – Check the parameterization of the safety card (permitted direction of movement SDI 2, tolerance SDI 2) and adjust if necessary.

Error: 64.03 (4003hex | 16387dec) Description: SDI 3 limit position exceeded in blocked direction of movement		
	Response: FS – warning	
	Cause	Measure
	Limit position SDI 3 exceeded in blocked direction of movement.	– Check the direction of movement of the application with the safety subfunction active, and adjust if necessary. – Check the parameterization of the safety card (permitted direction of movement SDI 3, tolerance SDI 3) and adjust if necessary.

33955948/EN – 05/2026

Error: 64.04 (4004hex | 16388dec) Description: SDI 4 limit position exceeded in blocked direction of movement		
	Response: FS – warning	
	Cause	Measure
	Limit position SDI 4 exceeded in blocked direction of movement.	– Check the direction of movement of the application with the safety subfunction active, and adjust if necessary. – Check the parameterization of the safety card (permitted direction of movement SDI 4, tolerance SDI 4) and adjust if necessary.

Error: 64.05 (4005hex | 16389dec) Description: SLI 1 limit position exceeded in position direction of movement	
Response: FS – warning	
Cause	Measure
Limit position SLI 1 exceeded in positive direction of movement.	Check the parameter setting of the safety option (SLI 1 positional tolerance), and adjust if necessary.

Error: 64.06 (4006hex | 16390dec) Description: SLI 2 limit position exceeded in position direction of movement	
Response: FS – warning	
Cause	Measure
Limit position SLI 2 exceeded in positive direction of movement.	Check the parameter setting of the safety card (positional tolerance SLI 2) and adjust, if necessary.

Error: 64.07 (4007hex | 16391dec) Description: SLI 3 limit position exceeded in position direction of movement	
Response: FS – warning	
Cause	Measure
Limit position SLI 3 exceeded in positive direction of movement.	Check the parameter setting of the safety card (positional tolerance SLI 3) and adjust, if necessary.

Error: 64.08 (4008hex | 16392dec) Description: SLI 4 limit position exceeded in position direction of movement	
Response: FS – warning	
Cause	Measure
Limit position SLI 4 exceeded in positive direction of movement.	Check the parameter setting of the safety card (positional tolerance SLI 4) and adjust, if necessary.

33955948/EN – 05/2026

Error: 64.09 (4009hex | 16393dec) Description: SLI 1 limit position exceeded in negative direction of movement		
	Response: FS – warning	
	Cause	Measure
	Limit position SLI 1 exceeded in negative direction of movement.	Check the parameter setting of the safety card (positional tolerance SLI 1) and adjust, if necessary.

Error: 64.10 (400Ahex | 16394dec) Description: SLI 2 limit position exceeded in negative direction of movement		
	Response: FS – warning	
	Cause	Measure
	Limit position SLI 2 exceeded in negative direction of movement.	Check the parameter setting of the safety card (positional tolerance SLI 2) and adjust, if necessary.

Error: 64.11 (400Bhex | 16395dec) Description: SLI 3 limit position exceeded in negative direction of movement		
	Response: FS – warning	
	Cause	Measure
	Limit position SLI 3 exceeded in negative direction of movement.	Check the parameter setting of the safety card (positional tolerance SLI 3) and adjust, if necessary.

Error: 64.12 (400Chex | 16396dec) Description: SLI 4 limit position exceeded in negative direction of movement		
	Response: FS – warning	
	Cause	Measure
	Limit position SLI 4 exceeded in negative direction of movement.	Check the parameter setting of the safety card (positional tolerance SLI 4) and adjust, if necessary.

Error: 64.13 (400Dhex | 16397dec) Description: SLI 1 braking distance exceeded in positive direction of movement		
	Response: FS – warning	
	Cause	Measure
	Minimum braking distance SLI 1 exceeded in positive direction of movement.	Check the parameter setting of the safety card (deceleration SLI 1, jerk time SLI 1, ramp type SLI 1) and adjust, if necessary.

33955948/EN – 05/2026

Error: 64.14 (400Ehex | 16398dec) Description: SLI 2 braking distance exceeded in positive direction of movement		
	Response: FS – warning	
	Cause	Measure
	Minimum braking distance SLI 2 exceeded in positive direction of movement.	Check the parameter setting of the safety card (deceleration SLI 2, jerk time SLI 2, ramp type SLI 2) and adjust, if necessary.

Error: 64.15 (400Fhex | 16399dec) Description: SLI 3 braking distance exceeded in positive direction of movement		
	Response: FS – warning	
	Cause	Measure
	Minimum braking distance SLI 3 exceeded in positive direction of movement.	Check the parameter setting of the safety card (deceleration SLI 3, jerk time SLI 3, ramp type SLI 3) and adjust, if necessary.

Error: 64.16 (4010hex | 16400dec) Description: SLI 4 braking distance exceeded in positive direction of movement		
	Response: FS – warning	
	Cause	Measure
	Minimum braking distance SLI 4 exceeded in positive direction of movement.	Check the parameter setting of the safety card (deceleration SLI 4, jerk time SLI 4, ramp type SLI 4) and adjust, if necessary.

Error: 64.17 (4011hex | 16401dec) Description: SLI 1 braking distance exceeded in negative direction of movement		
	Response: FS – warning	
	Cause	Measure
	Minimum braking distance SLI 1 exceeded in negative direction of movement.	Check the parameter setting of the safety card (deceleration SLI 1, jerk time SLI 1, ramp type SLI 1) and adjust, if necessary.

Error: 64.18 (4012hex | 16402dec) Description: SLI 2 braking distance exceeded in negative direction of movement		
	Response: FS – warning	
	Cause	Measure
	Minimum braking distance SLI 2 exceeded in negative direction of movement.	Check the parameter setting of the safety card (deceleration SLI 2, jerk time SLI 2, ramp type SLI 2) and adjust, if necessary.

33955948/EN – 05/2026

Error: 64.19 (4013hex | 16403dec) Description: SLI 3 braking distance exceeded in negative direction of movement		
	Response: FS – warning	
	Cause	Measure
	Minimum braking distance SLI 3 exceeded in negative direction of movement.	Check the parameter setting of the safety card (deceleration SLI 3, jerk time SLI 3, ramp type SLI 3) and adjust, if necessary.

Error: 64.20 (4014hex | 16404dec) Description: SLI 4 braking distance exceeded in negative direction of movement		
	Response: FS – warning	
	Cause	Measure
	Minimum braking distance SLI 4 exceeded in negative direction of movement.	Check the parameter setting of the safety card (deceleration SLI 4, jerk time SLI 4, ramp type SLI 4) and adjust, if necessary.

Error: 64.21 (4015hex | 16405dec) Description: SOS 1 limit position exceeded in position direction of movement		
	Response: FS – warning	
	Cause	Measure
	Limit position SOS 1 exceeded in positive direction of movement.	– Check the application for idle state. If necessary, optimize the controller. – Check the parameterization of the safety card (limit position SOS 1) and adjust if necessary.

Error: 64.22 (4016hex | 16406dec) Description: SOS 2 limit position exceeded in position direction of movement		
	Response: FS – warning	
	Cause	Measure
	Limit position SOS 2 exceeded in positive direction of movement.	– Check the application for idle state. If necessary, optimize the controller. – Check the parameterization of the safety card (limit position SOS 2) and adjust if necessary.

Error: 64.23 (4017hex | 16407dec) Description: SOS 3 limit position exceeded in position direction of movement		
	Response: FS – warning	
	Cause	Measure
	Limit position SOS 3 exceeded in positive direction of movement.	– Check the application for idle state. If necessary, optimize the controller. – Check the parameterization of the safety card (limit position SOS 3) and adjust if necessary.

33955948/EN – 05/2026

Error: 64.24 (4018hex | 16408dec) Description: SOS 4 limit position exceeded in position direction of movement		
	Response: FS – warning	
	Cause	Measure
	Limit position SOS 4 exceeded in positive direction of movement.	– Check the application for idle state. If necessary, optimize the controller. – Check the parameterization of the safety card (limit position SOS 4) and adjust if necessary.

Error: 64.25 (4019hex | 16409dec) Description: SOS 1 limit position exceeded in negative direction of movement		
	Response: FS – warning	
	Cause	Measure
	Limit position SOS 1 exceeded in negative direction of movement.	– Check the application for idle state. If necessary, optimize the controller. – Check the parameterization of the safety card (limit position SOS 1) and adjust if necessary.

Error: 64.26 (401Ahex | 16410dec) Description: SOS 2 limit position exceeded in negative direction of movement		
	Response: FS – warning	
	Cause	Measure
	Limit position SOS 2 exceeded in negative direction of movement.	– Check the application for idle state. If necessary, optimize the controller. – Check the parameterization of the safety card (limit position SOS 2) and adjust if necessary.

Error: 64.27 (401Bhex | 16411dec) Description: SOS 3 limit position exceeded in negative direction of movement		
	Response: FS – warning	
	Cause	Measure
	Limit position SOS 3 exceeded in negative direction of movement.	– Check the application for idle state. If necessary, optimize the controller. – Check the parameterization of the safety card (limit position SOS 3) and adjust if necessary.

Error: 64.28 (401Chex | 16412dec) Description: SOS 4 limit position exceeded in negative direction of movement		
	Response: FS – warning	
	Cause	Measure
	Limit position SOS 4 exceeded in negative direction of movement.	– Check the application for idle state. If necessary, optimize the controller. – Check the parameterization of the safety card (limit position SOS 4) and adjust if necessary.

33955948/EN – 05/2026

Error: 64.30 (401Ehex | 16414dec) Description: SLI 1 drive safety function activated when acknowledging encoder fault		
	Response: FS – system error	
	Cause	Measure
	Encoder fault acknowledged without having deactivated SLI 1 drive safety function.	Deactivate the SLI 1 drive safety function before acknowledging an encoder fault.

Error: 64.31 (401Fhex | 16415dec) Description: SLI 2 drive safety function activated when acknowledging encoder fault		
	Response: FS – system error	
	Cause	Measure
	Encoder fault acknowledged without having deactivated SLI 2 drive safety function.	Deactivate the SLI 2 drive safety function before acknowledging an encoder fault.

Error: 64.32 (4020hex | 16416dec) Description: SLI 3 drive safety function activated when acknowledging encoder fault		
	Response: FS – system error	
	Cause	Measure
	Encoder fault acknowledged without having deactivated SLI 3 drive safety function.	Deactivate the SLI 3 drive safety function before acknowledging an encoder fault.

Error: 64.33 (4021hex | 16417dec) Description: SLI 4 drive safety function activated when acknowledging encoder fault		
	Response: FS – system error	
	Cause	Measure
	Encoder fault acknowledged without having deactivated SLI 4 drive safety function.	Deactivate the SLI 4 drive safety function before acknowledging an encoder fault.

Error: 64.34 (4022hex | 16418dec) Description: SLI maximum speed exceeded		
	Response: FS – warning	
	Cause	Measure
	Parameterized maximum speed exceeded in at least one active SLI drive safety function.	– Check the maximum speed of the application with the safety subfunction active and adjust if necessary. – Check the parameterization of the safety card (maximum speed) and adjust if necessary.

33955948/EN – 05/2026

Error: 64.35 (4023hex | 16419dec) Description: SLI maximum speed exceeded in positive direction of movement		
	Response: FS – warning	
	Cause	Measure
	The parameterized maximum speed was exceeded in at least one active SLI safety subfunction.	– Check the maximum speed of the application with the safety subfunction active and correct it if necessary. – Check the parameterization of the safety option (maximum speed) and correct it if necessary.

Error: 64.36 (4024hex | 16420dec) Description: SLI maximum speed exceeded in negative direction of movement		
	Response: FS – warning	
	Cause	Measure
	The parameterized maximum speed was exceeded in at least one active SLI safety subfunction.	– Check the maximum speed of the application with the safety subfunction active and correct it if necessary. – Check the parameterization of the safety option (maximum speed) and correct it if necessary.

Error: 64.38 (4026hex | 16422dec) Description: SLI maximum position change exceeded		
	Response: FS – warning	
	Cause	Measure
	Maximum permitted position change exceeded in at least one active SLI drive safety function.	– Deactivate the SLI safety subfunction, acknowledge the error, and activate SLI again. – Check the encoder. – If the error occurs repeatedly, replace the safety card and send it together with the error number to SEW-EURODRIVE. For further support, contact SEW-EURODRIVE Service.

Error: 64.39 (4027hex | 16423dec) Description: SLP maximum speed exceeded in positive direction of movement		
	Response: FS – warning	
	Cause	Measure
	Maximum speed exceeded with active SLP drive safety function.	Deactivate the SLP safety subfunction before acknowledging the error. Reduce the SLP rotational speed. Activate the SLP safety subfunction again.

33955948/EN – 05/2026

Error: 64.40 (4028hex | 16424dec) Description: SLP maximum speed exceeded in negative direction of movement		
	Response: FS – warning	
	Cause	Measure
	Maximum speed exceeded with active SLP drive safety function.	Deactivate the SLP safety subfunction before acknowledging the error. Reduce the SLP rotational speed. Activate the SLP safety subfunction again.

Error: 64.41 (4029hex | 16425dec) Description: SLP 1 limit position exceeded	
Response: FS – warning	
Cause	Measure
Limit position SLP exceeded.	Deactivate the SLP safety subfunction before acknowledging the error. Set the SLP limit position in the valid range. Activate the SLP safety subfunction again.

Error: 64.42 (402Ahex | 16426dec) Description: SLP 2 limit position exceeded	
Response: FS – warning	
Cause	Measure
Limit position SLP exceeded.	Deactivate the SLP safety subfunction before acknowledging the error. Set the SLP limit position in the valid range. Activate the SLP safety subfunction again.

Error: 64.43 (402Bhex | 16427dec) Description: SLP 3 limit position exceeded	
Response: FS – warning	
Cause	Measure
Limit position SLP exceeded.	Deactivate the SLP safety subfunction before acknowledging the error. Set the SLP limit position in the valid range. Activate the SLP safety subfunction again.

Error: 64.44 (402Chex | 16428dec) Description: SLP 4 limit position exceeded	
Response: FS – warning	
Cause	Measure
Limit position SLP exceeded.	Deactivate the SLP safety subfunction before acknowledging the error. Set the SLP limit position in the valid range. Activate the SLP safety subfunction again.

33955948/EN – 05/2026

Error: 64.45 (402Dhex | 16429dec) Description: SLP 1 limit speed exceeded in positive direction of movement		
	Response: FS – warning	
	Cause	Measure
	SLP speed not reduced or not reduced fast enough when approaching limit position.	Deactivate the SLP safety subfunction before acknowledging the error. Reduce the SLP rotational speed. Activate the SLP safety subfunction again.

Error: 64.46 (402Ehex | 16430dec) Description: SLP 2 limit speed exceeded in positive direction of movement		
	Response: FS – warning	
	Cause	Measure
	SLP speed not reduced or not reduced fast enough when approaching limit position.	Deactivate the SLP safety subfunction before acknowledging the error. Reduce the SLP rotational speed. Activate the SLP safety subfunction again.

Error: 64.47 (402Fhex | 16431dec) Description: SLP 3 limit speed exceeded in positive direction of movement		
	Response: FS – warning	
	Cause	Measure
	SLP speed not reduced or not reduced fast enough when approaching limit position.	Deactivate the SLP safety subfunction before acknowledging the error. Reduce the SLP rotational speed. Activate the SLP safety subfunction again.

Error: 64.48 (4030hex | 16432dec) Description: SLP 4 limit speed exceeded in positive direction of movement		
	Response: FS – warning	
	Cause	Measure
	SLP speed not reduced or not reduced fast enough when approaching limit position.	Deactivate the SLP safety subfunction before acknowledging the error. Reduce the SLP rotational speed. Activate the SLP safety subfunction again.

Error: 64.49 (4031hex | 16433dec) Description: SLP 1 limit speed exceeded in negative direction of movement		
	Response: FS – warning	
	Cause	Measure
	SLP speed not reduced or not reduced fast enough when approaching limit position.	Deactivate the SLP safety subfunction before acknowledging the error. Reduce the SLP rotational speed. Activate the SLP safety subfunction again.

33955948/EN – 05/2026

Error: 64.50 (4032hex | 16434dec) Description: SLP 2 limit speed exceeded in negative direction of movement		
	Response: FS – warning	
	Cause	Measure
	SLP speed not reduced or not reduced fast enough when approaching limit position.	Deactivate the SLP safety subfunction before acknowledging the error. Reduce the SLP rotational speed. Activate the SLP safety subfunction again.

Error: 64.51 (4033hex | 16435dec) Description: SLP 3 limit speed exceeded in negative direction of movement		
	Response: FS – warning	
	Cause	Measure
	SLP speed not reduced or not reduced fast enough when approaching limit position.	Deactivate the SLP safety subfunction before acknowledging the error. Reduce the SLP rotational speed. Activate the SLP safety subfunction again.

Error: 64.52 (4034hex | 16436dec) Description: SLP 4 limit speed exceeded in negative direction of movement		
	Response: FS – warning	
	Cause	Measure
	SLP speed not reduced or not reduced fast enough when approaching limit position.	Deactivate the SLP safety subfunction before acknowledging the error. Reduce the SLP rotational speed. Activate the SLP safety subfunction again.

Error: 64.53 (4035hex | 16437dec) Description: SLP encoder system not referenced		
	Response: FS – warning	
	Cause	Measure
	SLP drive safety function activated with non-referenced encoder system.	Reference the encoder system before activating the SLP drive safety function.

13.9.14 Error 65 Other drive safety function

Error: 65.01 (4101hex | 16641dec) Description: SLA 1 limit acceleration exceeded in positive direction of movement		
	Response: FS – warning	
	Cause	Measure
	Limit acceleration SLA 1 exceeded in positive direction of movement.	– Check the acceleration of the application while the safety subfunction is active, and adjust if necessary. – Check the parameterization of the safety card (limit acceleration SLA 1), and adjust if necessary.

33955948/EN – 05/2026

Error: 65.02 (4102hex | 16642dec) Description: SLA 2 limit acceleration exceeded in positive direction of movement		
	Response: FS – warning	
	Cause	Measure
	Limit acceleration SLA 2 exceeded in positive direction of movement.	– Check the acceleration of the application while the safety subfunction is active, and adjust if necessary. – Check the parameterization of the safety card (limit acceleration SLA 2), and adjust if necessary.

Error: 65.03 (4103hex | 16643dec) Description: SLA 3 limit acceleration exceeded in positive direction of movement		
	Response: FS – warning	
	Cause	Measure
	Limit acceleration SLA 3 exceeded in positive direction of movement.	– Check the acceleration of the application while the safety subfunction is active, and adjust if necessary. – Check the parameterization of the safety card (limit acceleration SLA 3), and adjust if necessary.

Error: 65.04 (4104hex | 16644dec) Description: SLA 4 limit acceleration exceeded in positive direction of movement		
	Response: FS – warning	
	Cause	Measure
	Limit acceleration SLA 4 exceeded in positive direction of movement.	– Check the acceleration of the application while the safety subfunction is active, and adjust if necessary. – Check the parameterization of the safety card (limit acceleration SLA 4), and adjust if necessary.

Error: 65.05 (4105hex | 16645dec) Description: SLA 1 limit acceleration exceeded in negative direction of movement		
	Response: FS – warning	
	Cause	Measure
	Limit acceleration SLA 1 exceeded in negative direction of movement.	– Check the acceleration of the application while the safety subfunction is active, and adjust if necessary. – Check the parameterization of the safety card (limit acceleration SLA 1), and adjust if necessary.

33955948/EN – 05/2026

Error: 65.06 (4106hex | 16646dec) Description: SLA 2 limit acceleration exceeded in negative direction of movement		
	Response: FS – warning	
	Cause	Measure
	Limit acceleration SLA 2 exceeded in negative direction of movement.	– Check the acceleration of the application while the safety subfunction is active, and adjust if necessary. – Check the parameterization of the safety card (limit acceleration SLA 2), and adjust if necessary.

Error: 65.07 (4107hex | 16647dec) Description: SLA 3 limit acceleration exceeded in negative direction of movement		
	Response: FS – warning	
	Cause	Measure
	Limit acceleration SLA 3 exceeded in negative direction of movement.	– Check the acceleration of the application while the safety subfunction is active, and adjust if necessary. – Check the parameterization of the safety card (limit acceleration SLA 3), and adjust if necessary.

Error: 65.08 (4108hex | 16648dec) Description: SLA 4 limit acceleration exceeded in negative direction of movement		
	Response: FS – warning	
	Cause	Measure
	Limit acceleration SLA 4 exceeded in negative direction of movement.	– Check the acceleration of the application while the safety subfunction is active, and adjust if necessary. – Check the parameterization of the safety card (limit acceleration SLA 4), and adjust if necessary.

Error: 65.09 (4109hex | 16649dec) Description: Parameter setting without acknowledged limit violation		
	Response: FS – system error	
	Cause	Measure
	Parameter setting performed although limit violation of safety function not acknowledged.	Acknowledge the error.

33955948/EN – 05/2026

Error: 65.10 (410Ahex | 16650dec) Description: SLA maximum speed exceeded in positive direction of movement		
	Response: FS – warning	
	Cause	Measure
	General maximum speed exceeded in positive direction of movement while SLA is active.	– Check the maximum speed of the application while the safety subfunction is active, and adjust if necessary. – Check the parameterization of the safety card (maximum speed SLA 4), and adjust if necessary.

Error: 65.11 (410Bhex | 16651dec) Description: SLA maximum speed exceeded in negative direction of movement		
	Response: FS – warning	
	Cause	Measure
	General maximum speed exceeded in negative direction of movement while SLA is active.	– Check the maximum speed of the application while the safety subfunction is active, and adjust if necessary. – Check the parameterization of the safety card (maximum speed SLA 4), and adjust if necessary.

13.9.15 Error 66 Errors and messages of MOVISAFE® CS..A

Error: 66.01 (4201hex | 16897dec) Description: Data storage problem during firmware update		
	Response: FS – warning	
	Cause	Measure
	Data storage problem during firmware update.	If the error occurs repeatedly, replace the safety card and send it together with the error number to SEW-EURODRIVE. For further support, contact SEW-EURODRIVE Service.

Error: 66.02 (4202hex | 16898dec) Description: Faulty firmware signature		
	Response: FS – system error	
	Cause	Measure
	Failed to confirm firmware.	– Confirm the firmware signature again. – If the error occurs repeatedly, replace the safety card and send it together with the error number to SEW-EURODRIVE. For further support, contact SEW-EURODRIVE Service.

Error: 66.03 (4203hex | 16899dec) Description: EDM F-DO 00 – error signal contact 1		
	Response: FS – warning	
	Cause	Measure
	The external switching element at F-DO 00 is defective. Signal contact 1 deviates from the setpoint.	Check the external switching element at F-DO 00.

Error: 66.04 (4204hex | 16900dec) Description: EDM F-DO 01 – error signal contact 1		
	Response: FS – warning	
	Cause	Measure
	The external switching element at F-DO 01 is defective. Signal contact 1 deviates from the setpoint.	Check the external switching element at F-DO 01.

Error: 66.05 (4205hex | 16901dec) Description: EDM F-DO 02 – error signal contact 1		
	Response: FS – warning	
	Cause	Measure
	The external switching element at F-DO 02 is defective. Signal contact 1 deviates from the setpoint.	Check the external switching element at F-DO 02.

Error: 66.06 (4206hex | 16902dec) Description: EDM F-DO 03 – error signal contact 1		
	Response: FS – warning	
	Cause	Measure
	The external switching element at F-DO 03 is defective. Signal contact 1 deviates from the setpoint.	Check the external switching element at F-DO 03.

Error: 66.07 (4207hex | 16903dec) Description: EDM F-DO 04 – error signal contact 1		
	Response: FS – warning	
	Cause	Measure
	The external switching element at F-DO 04 is defective. Signal contact 1 deviates from the setpoint.	Check the external switching element at F-DO 04.

33955948/EN – 05/2026

Error: 66.08 (4208hex | 16904dec) Description: EDM F-DO 05 – error signal contact 1		
	Response: FS – warning	
	Cause	Measure
	The external switching element at F-DO 05 is defective. Signal contact 1 deviates from the setpoint.	Check the external switching element at F-DO 05.

Error: 66.11 (420Bhex | 16907dec) Description: EDM F-DO 00 – error signal contact 2		
	Response: FS – warning	
	Cause	Measure
	The external switching element at F-DO 00 is defective. Signal contact 2 deviates from the setpoint.	Check the external switching element at F-DO 00.

Error: 66.12 (420Chex | 16908dec) Description: EDM F-DO 01 – error signal contact 2		
	Response: FS – warning	
	Cause	Measure
	The external switching element at F-DO 01 is defective. Signal contact 2 deviates from the setpoint.	Check the external switching element at F-DO 01.

Error: 66.13 (420Dhex | 16909dec) Description: EDM F-DO 02 – error signal contact 2		
	Response: FS – warning	
	Cause	Measure
	The external switching element at F-DO 02 is defective. Signal contact 2 deviates from the setpoint.	Check the external switching element at F-DO 02.

Error: 66.14 (420Ehex | 16910dec) Description: EDM F-DO 03 – error signal contact 2		
	Response: FS – warning	
	Cause	Measure
	The external switching element at F-DO 03 is defective. Signal contact 2 deviates from the setpoint.	Check the external switching element at F-DO 03.

33955948/EN – 05/2026

Error: 66.15 (420Fhex | 16911dec) Description: EDM F-DO 04 – error signal contact 2		
	Response: FS – warning	
	Cause	Measure
	The external switching element at F-DO 04 is defective. Signal contact 2 deviates from the set-point.	Check the external switching element at F-DO 04.

Error: 66.16 (4210hex | 16912dec) Description: EDM F-DO 05 – error signal contact 2		
	Response: FS – warning	
	Cause	Measure
	The external switching element at F-DO 05 is defective. Signal contact 2 deviates from the set-point.	Check the external switching element at F-DO 05.

Error: 66.30 (421Ehex | 16926dec) Description: Permanent error acknowledgment		
	Response: FS – warning	
	Cause	Measure
	Permanent acknowledgment signal detected.	Check the wiring.

Error: 66.31 (421Fhex | 16927dec) Description: Permanent F-DI unlatching signal		
	Response: FS – warning	
	Cause	Measure
	Permanent F-DI unlatching signal detected.	Make sure the F-DI unlatching signal is not present permanently.

Error: 66.32 (4220hex | 16928dec) Description: Safety key error		
	Response: FS – system error	
	Cause	Measure
	Safety key defective, incompatible, or not connected with safety card.	– Make sure that the safety key is inserted. – If the error occurs repeatedly, contact SEW-EURODRIVE Service.

Error: 66.33 (4221hex | 16929dec) Description: Safety key data set error		
	Response: FS – system error	
	Cause	Measure
	Error while reading or writing data set on safety key.	Transfer the parameter setting to the safety card again using the Assist CS.. tool.

33955948/EN – 05/2026

Error: 66.34 (4222hex | 16930dec) Description: Data storage warning		
	Response: FS – warning	
	Cause	Measure
	Warning/fault signaled while storing data.	– Perform basic initialization on device. – If the error occurs repeatedly, replace the safety card and send it together with the error number to SEW-EURODRIVE. For further support, contact SEW-EURODRIVE Service.

Error: 66.35 (4223hex | 16931dec) Description: Data storage plausibility check failed		
	Response: FS – critical fault	
	Cause	Measure
	Values of data storage do not match expected values.	– Switch the device off and on again. – If the error occurs repeatedly, replace the safety card and send it together with the error number to SEW-EURODRIVE. For further support, contact SEW-EURODRIVE Service.

Error: 66.36 (4224hex | 16932dec) Description: Faulty hardware ID		
	Response: FS – critical fault	
	Cause	Measure
	Hardware defective.	Replace the safety option and send it together with the error number to SEW-EURODRIVE. For further support, contact SEW-EURODRIVE Service.

Error: 66.38 (4226hex | 16934dec) Description: Faulty application parameter setting		
	Response: FS – system error	
	Cause	Measure
	Faulty application parameters read from data memory.	Transfer the data set to the safety card again using the Assist CS.. tool.

Error: 66.39 (4227hex | 16935dec) Description: Faulty data from safety key		
	Response: FS – system error	
	Cause	Measure
	Faulty data read from safety key.	Transfer the data set to the safety card again using the Assist CS.. tool.

33955948/EN – 05/2026

Error: 66.40 (4228hex | 16936dec) Description: Error saving application parameters		
	Response: FS – system error	
	Cause	Measure
	Error saving application parameters.	Transfer the data set to the safety card again using the Assist CS.. tool.

Error: 66.41 (4229hex | 16937dec) Description: Error saving key		
	Response: FS – system error	
	Cause	Measure
	Error saving key to safety key.	Transfer the data set to the safety card again using the Assist CS.. tool.

Error: 66.42 (422Ahex | 16938dec) Description: Error saving F-slave configuration		
	Response: FS – system error	
	Cause	Measure
	Error while saving F-slave configuration to safety key.	Transfer the data set to the safety card again using the Assist CS.. tool.

Error: 66.43 (422Bhex | 16939dec) Description: Corrupt data while reading F-slave configuration		
	Response: FS – system error	
	Cause	Measure
	Faulty F-Slave configuration data was read from the safety key.	Transfer the F-slave configuration to the safety card again using the Assist CS.. tool.

Error: 66.44 (422Chex | 16940dec) Description: Access to data memory failed		
	Response: FS – critical fault	
	Cause	Measure
	Access to data memory not possible.	– Switch the device off and on again. – If the error occurs repeatedly, replace the safety card and send it together with the error number to SEW-EURODRIVE. For further support, contact SEW-EURODRIVE Service.

33955948/EN – 05/2026

Error: 66.45 (422Dhex | 16941dec) Description: Saved scope of parameters not up to date		
	Response: FS – warning	
	Cause	Measure
	Scope of parameters of software changed after update and might no longer be compatible with parameter setting in non-volatile data memory.	– Reset the device to the delivery state. – If the error occurs repeatedly, replace the safety card and send it together with the error number to SEW-EURODRIVE. For further support, contact SEW-EURODRIVE Service.

Error: 66.46 (422Ehex | 16942dec) Description: Compatibility error		
	Response: FS – system error	
	Cause	Measure
	Basic unit not compatible with safety card.	If the error occurs repeatedly, replace the basic device and send it together with the error number to SEW-EURODRIVE. For further support, contact SEW-EURODRIVE Service.

Error: 66.47 (422Fhex | 16943dec) Description: Non-volatile memory incompatible – basic initialization		
	Response: FS – system error	
	Cause	Measure
	Scope of parameters of software changed after update and is no longer compatible with parameter setting in non-volatile data memory.	– Perform a basic initialization of the safety option. – If the error occurs repeatedly, replace the safety option and send it to SEW-EURODRIVE together with the error number. For further support, contact SEW-EURODRIVE Service.

Error: 66.48 (4230hex | 16944dec) Description: Acknowledgment required after parameter set restore		
	Response: FS – system error	
	Cause	Measure
	Parameter set restored using non-safe communication.	Acknowledge the error.

Error: 66.49 (4231hex | 16945dec) Description: Acknowledgment required after delivery state		
	Response: FS – system error	
	Cause	Measure
	Safety card reset to delivery state.	Acknowledge the error.

33955948/EN – 05/2026

Error: 66.50 (4232hex | 16946dec) Description: Incompatible data from safety key		
	Response: FS – system error	
	Cause	Measure
	Incompatible device version or device variant written to safety key.	Transfer the data set to the safety card again using the Assist CS.. tool.

Error: 66.51 (4233hex | 16947dec) Description: Wrong version of the basic unit for FSoE		
	Response: FS – warning	
	Cause	Measure
	Only basic units from version 4 support using FSoE.	Disable the function or update the basic unit.

Error: 66.52 (4234hex | 16948dec) Description: Wrong version of the basic unit for CIP Safety™		
	Response: FS – warning	
	Cause	Measure
	Only basic units from version 7 support using CIP Safety™.	Disable the function or update the basic unit.

Error: 66.53 (4235hex | 16949dec) Description: Wrong version of the basic unit for FSoE with SYSTEM profile		
	Response: FS – warning	
	Cause	Measure
	Only basic units from version 4.1 support using FSoE with SYSTEM profile.	Disable the function or update the basic unit.

Error: 66.54 (4236hex | 16950dec) Description: Wrong version of the basic unit for limitation by the safety card		
	Response: FS – warning	
	Cause	Measure
	Only basic units from version 4 support using the limiting function.	Disable limiting or update the basic unit.

Error: 66.55 (4237hex | 16951dec) Description: Wrong version of the basic unit for configurable ramp times for the brake test		
	Response: FS – warning	
	Cause	Measure
	Only basic units from version 6 support using configurable ramp times in the brake test.	Set the ramp duration to 0 or update the basic unit.

33955948/EN – 05/2026

Error: 66.56 (4238hex | 16952dec) Description: Warning safe MOVILINK® DDI encoder		
	Response: FS – warning	
	Cause	Measure
	Encoder signaled a warning.	– If the error occurs repeatedly, contact SEW-EURODRIVE Service.

Error: 66.57 (4239hex | 16953dec) Description: Safe MOVILINK® DDI encoder not compatible with version of basic device		
	Response: FS – warning	
	Cause	Measure
	The safe MOVILINK® DDI encoder can only be used with a later version of the basic device.	Update basic device.

Error: 66.70 (4246hex | 16966dec) Description: SREF direct referencing – deactivation too early		
	Response: FS – warning	
	Cause	Measure
	SREF direct referencing must not be disabled during execution.	Check process of control program. If necessary, optimize control program.

Error: 66.71 (4247hex | 16967dec) Description: SREF direct referencing – permitted movement exceeded		
	Response: FS – warning	
	Cause	Measure
	During SREF direct referencing, the movement must not be greater than the configured position hysteresis.	– Check the application for idle state. If necessary, optimize the controller. – Check the parameterization of the safety card (position hysteresis) and adjust if necessary.

Error: 66.72 (4248hex | 16968dec) Description: SREF reference travel – reference switch quit in wrong direction		
	Response: FS – warning	
	Cause	Measure
	Reference switch quit in the wrong direction during SREF reference travel.	– Check the direction of rotation of the motor when reference travel is active and adjust if necessary. – Check the parameterization of the safety card (direction of movement of reference travel) and adjust if necessary.

Error: 66.73 (4249hex | 16969dec) Description: SREF reference travel – maximum speed exceeded		
	Response: FS – warning	
	Cause	Measure
	Maximum speed exceeded during SREF reference travel.	– Check the maximum speed of the application while reference travel is active and adjust if necessary. – Check the parameterization of the safety card (maximum speed of reference travel) and adjust if necessary.

Error: 66.74 (424Ahex | 16970dec) Description: SREF reference travel – error with second reference switch signal		
	Response: FS – warning	
	Cause	Measure
	Error detected during SREF reference travel due to wrong reference switch signal.	– Repeat the reference travel. – Check the cabling of the reference switch and adjust if necessary.

Error: 66.75 (424Bhex | 16971dec) Description: SREF reference travel – error with first reference switch signal		
	Response: FS – warning	
	Cause	Measure
	Error detected during SREF reference travel due to wrong reference switch signal.	– Repeat the reference travel. – Check the cabling of the reference switch and adjust if necessary.

Error: 66.76 (424Chex | 16972dec) Description: SREF reference travel – reference switch discrepancy error		
	Response: FS – input fault	
	Cause	Measure
	Parameterized maximum cam discrepancy with 2-channel evaluation of reference switch signals was exceeded.	– Check the 2-channel reference switch. – Check the parameterization of the safety card and increase the cam discrepancy if necessary.

Error: 66.77 (424Dhex | 16973dec) Description: SREF direct referencing – time exceeded between activation and trigger signal		
	Response: FS – warning	
	Cause	Measure
	No trigger signal detected within 60 seconds from activation of SREF direct referencing.	Activate SREF direct referencing again and execute within 60 seconds.

33955948/EN – 05/2026

Error: 66.78 (424Ehex | 16974dec) Description: SREF reference travel – cam signal despite inactive SREF function		
	Response: FS – warning	
	Cause	Measure
	Although the status of SREF reference travel is inactive, a cam was detected after completed reference travel.	– Deactivate SREF reference travel. – Check the referencing process.

Error: 66.80 (4250hex | 16976dec) Description: Change of process data bit "cam slip adjustment" at wrong position		
	Response: FS – warning	
	Cause	Measure
	The process data bit "cam slip adjustment" changed the state at a position where no slip adjustment cam was configured.	– Check the parameterization of the slip adjustment. – Check the generation of process data in the controller.

Error: 66.81 (4251hex | 16977dec) Description: Maximum distance slip adjustment exceeded		
	Response: FS – warning	
	Cause	Measure
	Parameterized distance exceed without having performed slip adjustment or referencing.	– Allow slip adjustment cams to be passed over more frequently. – Parameterize a longer distance.

Error: 66.82 (4252hex | 16978dec) Description: Error saving specific delivery data set		
	Response: FS – warning	
	Cause	Measure
	Saving not successful.	– Switch the device off and on again. Repeat download. – If the error occurs repeatedly, replace the safety option and send it to SEW-EURODRIVE together with the error number. For further support, contact SEW-EURODRIVE Service.

Error: 66.83 (4253hex | 16979dec) Description: Maximum length of specific delivery set exceeded		
	Response: FS – warning	
	Cause	Measure
	Too many parameters have a specific delivery value that deviates from the default value.	Reduce the number of parameters that deviate from the default value.

Error: 66.84 (4254hex | 16980dec) Description: Pairing of the safe MOVILINK® DDI encoder failed		
	Response: FS – warning	
	Cause	Measure
	Error while resetting pairing.	Repeat download.

Error: 66.85 (4255hex | 16981dec) Description: Safety option not validated		
	Response: FS – warning	
	Cause	Measure
	The current configuration was changed without having performed another validation after the change.	Perform a validation.

Error: 66.86 (4256hex | 16982dec) Description: Data error		
	Response: FS – data error internal memory	
	Cause	Measure
	Corrupt safety-relevant data detected in volatile memory of safety option.	– Acknowledge the error. – If the error occurs repeatedly, replace the safety option and send it to SEW-EURODRIVE together with the error number. For further support, contact SEW-EURODRIVE Service.

Error: 66.87 (4257hex | 16983dec) Description: Safety of the safe MOVILINK® DDI encoder not ensured		
	Response: FS – warning	
	Cause	Measure
	Maximum service life of safe MOVILINK® DDI encoder reached	– Replace motor encoder. – For further support, contact SEW-EURODRIVE Service.

Error: 66.88 (4258hex | 16984dec) Description: Error writing firmware signature to safe MOVILINK® DDI encoder		
	Response: FS – warning	
	Cause	Measure
	Error writing firmware signature to safe MOVILINK® DDI encoder.	– Execute the function again. – For further support, contact SEW-EURODRIVE Service.

33955948/EN – 05/2026

Error: 66.89 (4259hex | 16985dec) Description: Two SREF functions activated at the same time		
	Response: FS – warning	
	Cause	Measure
	Two SREF functions activated at the same time.	Perform a new referencing.

Error: 66.90 (425Ahex | 16986dec) Description: Acknowledgment required after restart		
	Response: FS – system error	
	Cause	Measure
	Acknowledgment required after restart.	Acknowledge the error.

Error: 66.91 (425Bhex | 16987dec) Description: Change of system state with unacknowledged fault		
	Response: FS – system error	
	Cause	Measure
	Unacknowledged fault detected during transition to "operation" system state.	Rectify and acknowledge the fault.

Error: 66.92 (425Chex | 16988dec) Description: Error saving referencing data to internal NV memory		
	Response: FS – system error	
	Cause	Measure
	Error saving referencing data to internal NV memory.	– Acknowledge the error. – If the error occurs repeatedly, replace the safety card and send it together with the error number to SEW-EURODRIVE. For further support, contact SEW-EURODRIVE Service.

Error: 66.93 (425Dhex | 16989dec) Description: External watchdog timeout		
	Response: FS – system error	
	Cause	Measure
	External watchdog tripped.	– Acknowledge the error. – If the error occurs repeatedly, replace the safety option and send it to SEW-EURODRIVE together with the error number. For further support, contact SEW-EURODRIVE Service.

33955948/EN – 05/2026

Error: 66.94 (425Ehex | 16990dec) Description: Error during external watchdog diagnostics		
	Response: FS – system error	
	Cause	Measure
	Error detected during external watchdog diagnostics.	– Acknowledge the error. – If the error occurs repeatedly, replace the safety option and send it to SEW-EURODRIVE together with the error number. For further support, contact SEW-EURODRIVE Service.

Error: 66.95 (425Fhex | 16991dec) Description: Referencing data corrupt	
Response: FS – warning	
Cause	Measure
Referencing data corrupt.	Perform a new referencing.

Error: 66.96 (4260hex | 16992dec) Description: Error saving referencing data to safety key		
	Response: FS – system error	
	Cause	Measure
	Error while saving referencing data to safety key.	– Perform a new referencing process. – If the fault occurs repeatedly, replace the safety key. For further support, contact SEW-EURODRIVE Service.

Error: 66.97 (4261hex | 16993dec) Description: Missing or invalid referencing data		
	Response: FS – warning	
	Cause	Measure
	Referencing not yet performed or referencing data not compatible.	Perform a new referencing.

Error: 66.98 (4262hex | 16994dec) Description: Inconsistent referencing data		
	Response: FS – warning	
	Cause	Measure
	Referencing data inconsistent.	Perform a new referencing.

33955948/EN – 05/2026

Error: 66.99 (4263hex | 16995dec) Description: Error reading referencing data		
	Response: FS – system error	
	Cause	Measure
	Error reading referencing data.	– Switch the device off and on again. – If the error occurs repeatedly, replace the safety card and send it together with the error number to SEW-EURODRIVE. For further support, contact SEW-EURODRIVE Service.

Error: 66.100 (4264hex | 16996dec) Description: System switched on		
	Response: FS – message	
	Cause	Measure
	Power-on signal set.	For information only.

Error: 66.101 (4265hex | 16997dec) Description: Acknowledgment message		
	Response: FS – message	
	Cause	Measure
	All error messages that can be acknowledged are reset.	For information only.

Error: 66.102 (4266hex | 16998dec) Description: Signal safe MOVILINK® DDI encoder		
	Response: FS – message	
	Cause	Measure
	Encoder issued message.	– If the error occurs repeatedly, contact SEW-EURODRIVE Service.

Error: 66.103 (4267hex | 16999dec) Description: Log entry safe MOVILINK® DDI encoder		
	Response: FS – log	
	Cause	Measure
	Encoder has set log entry.	– If the error occurs repeatedly, contact SEW-EURODRIVE Service.

Error: 66.104 (4268hex | 17000dec) Description: System error MOVILINK® DDI encoder		
	Response: FS – system error	
	Cause	Measure
	Encoder detected system error.	– If the error occurs repeatedly, contact SEW-EURODRIVE Service.

33955948/EN – 05/2026

Error: 66.110 (426Ehex | 17006dec) Description: Fault history overflow		
	Response: FS – message	
	Cause	Measure
	Overflow (data loss) in fault history.	For information only.

Error: 66.120 (4278hex | 17016dec) Description: Muting activation		
	Response: FS – message	
	Cause	Measure
	Muting has been activated.	For information only.

Error: 66.130 (4282hex | 17026dec) Description: Invalid production data		
	Response: FS – message	
	Cause	Measure
	Production data invalid in one of the two data sets. Repair started.	For information only.

Error: 66.140 (428Chex | 17036dec) Description: Activation of start inhibit		
	Response: FS – warning	
	Cause	Measure
	Start inhibit has been activated by one of the following actions: – Switching on the device – Ending emergency mode – Parameterization in the event of a limit value violation – Parameterization during an active brake test – Parameterization in the event of slip adjustment error – Parameterization in the event of EDM error – Parameterization with input error/output error – Parameter set restoration or delivery state	Acknowledge fault or activate muting.

Error: 66.150 (4296hex | 17046dec) Description: Faulty data (signature) from data memory		
	Response: FS – message	
	Cause	Measure
	Faulty data (signature) read from data memory. Data corrected.	For information only.

33955948/EN – 05/2026

Error: 66.151 (4297hex | 17047dec) Description: New firmware update started		
	Response: FS – log	
	Cause	Measure
	New signatures transferred to safety card and firmware update started.	For information only.

Error: 66.152 (4298hex | 17048dec) Description: Different firmware signatures		
	Response: FS – log	
	Cause	Measure
	The saved signatures do not match.	Enter the signatures again.

Error: 66.160 (42A0hex | 17056dec) Description: Faulty data (master password) from data memory		
	Response: FS – message	
	Cause	Measure
	Failed to read master password from data memory.	For information only.

Error: 66.168 (42A8hex | 17064dec) Description: Parameter set restore performed		
	Response: FS – log	
	Cause	Measure
	The parameter set has been restored.	For information only.

Error: 66.169 (42A9hex | 17065dec) Description: Delivery state restored		
	Response: FS – log	
	Cause	Measure
	The delivery state has been restored.	For information only.

Error: 66.170 (42AAhex | 17066dec) Description: Parameter setting completed		
	Response: FS – log	
	Cause	Measure
	Parameters have been set.	For information only.

Error: 66.171 (42ABhex | 17067dec) Description: Report created		
	Response: FS – log	
	Cause	Measure
	The report has been created.	For information only.

33955948/EN – 05/2026

Error: 66.172 (42AChex | 17068dec) Description: Acceptance confirmed		
	Response: FS – log	
	Cause	Measure
	Acceptance confirmed.	For information only.

Error: 66.173 (42ADhex | 17069dec) Description: Referencing data accepted from safety key		
	Response: FS – message	
	Cause	Measure
	Safety key accepted as the sole data source.	For information only.

Error: 66.174 (42AEhex | 17070dec) Description: Direct referencing finished		
	Response: FS – log	
	Cause	Measure
	Direct referencing finished.	For information only.

Error: 66.175 (42AFhex | 17071dec) Description: Validation withdrawn		
	Response: FS – log	
	Cause	Measure
	Validation withdrawn.	For information only.

Error: 66.176 (42B0hex | 17072dec) Description: Error reading specific delivery data set		
	Response: FS – log	
	Cause	Measure
	The specific delivery data set is corrupt.	Write the delivery data set again.

Error: 66.177 (42B1hex | 17073dec) Description: Pairing of the safe MOVILINK® DDI encoder performed		
	Response: FS – log	
	Cause	Measure
	Pairing of safe MOVILINK® DDI encoder requested via Assist CS.. tool.	For information only.

Error: 66.178 (42B2hex | 17074dec) Description: Safe MOVILINK® DDI encoder reset to delivery state		
	Response: FS – log	
	Cause	Measure
	Resetting the safe MOVILINK® DDI encoder to delivery state requested via Assist CS.. tool.	For information only.

33955948/EN – 05/2026

Error: 66.179 (42B3hex | 17075dec) Description: Corrupt data in application configuration		
	Response: FS – log	
	Cause	Measure
	Corrupt data was found in the application configuration and reset to default values. Further error messages may therefore occur during parameter checking.	Transfer configuration via the Assist CS.. tool again.

Error: 66.180 (42B4hex | 17076dec) Description: Retentive parameter memory reorganized		
	Response: FS – log	
	Cause	Measure
	The parameter range of the firmware does not match the parameter range of the parameter memory. The parameter memory has been reorganized.	Check parameter setting after a firmware update.

13.9.16 Error 67 Safe communication

Error: 67.10 (430Ahex | 17162dec) Description: Error in the SafeCom control byte		
	Response: FS – warning	
	Cause	Measure
	Fault detected in the communication network of SEW-EURODRIVE. Safe communication nodes not configured correctly.	– Make sure that the same safety protocol has been set in fieldbus master and fieldbus slave. – Make sure that the communication channel between fieldbus master and fieldbus slave has been configured correctly.

Error: 67.20 (4314hex | 17172dec) Description: Safety protocol system error		
	Response: FS – system error	
	Cause	Measure
	Safety protocol signaled system error.	– Check the configuration of the communication parameters of the safety card. – Acknowledge the error. – Restart safe communication. – If the fault occurs again, switch the device off and on again. – If the error occurs repeatedly, contact SEW-EURODRIVE Service.

Error: 67.21 (4315hex | 17173dec) Description: Safety protocol warning		
	Response: FS – warning	
	Cause	Measure
	Safety protocol signaled warning.	– Acknowledge the warning. – Restart safe communication. – If the warning occurs again, switch the device off and on again. – If the warning occurs repeatedly, contact SEW-EURODRIVE Service.

Error: 67.22 (4316hex | 17174dec) Description: Faulty configuration of process data lengths		
	Response: FS – warning	
	Cause	Measure
	Configured process data lengths of safety protocol in fieldbus master do not match expected lengths.	– Check the configuration of the communication parameters of the safety card. – Acknowledge the warning. – Restart safe communication. – If the warning occurs again, switch the device off and on again. – If the warning occurs repeatedly, contact SEW-EURODRIVE Service.

Error: 67.23 (4317hex | 17175dec) Description: Configuration error		
	Response: FS – system error	
	Cause	Measure
	Error in configuration of safety protocol.	– Check the configuration of the communication parameters of the safety card. – Acknowledge the warning. – Restart safe communication. – If the warning occurs again, switch the device off and on again. – If the warning occurs repeatedly, contact SEW-EURODRIVE Service.

33955948/EN – 05/2026

Error: 67.24 (4318hex | 17176dec) Description: Cyclic data exchange error		
	Response: FS – system error	
	Cause	Measure
	Cyclic data exchange error.	– Acknowledge the warning. – Restart safe communication. – If the warning occurs again, switch the device off and on again. – If the warning occurs repeatedly, contact SEW-EURODRIVE Service.

Error: 67.26 (431Ahex | 17178dec) Description: Version error		
	Response: FS – warning	
	Cause	Measure
	Communication partner version not supported.	– Switch the device off and on again. – If the fault occurs repeatedly, contact SEW-EURODRIVE Service.

Error: 67.27 (431Bhex | 17179dec) Description: Incompatibility error during communication		
	Response: FS – warning	
	Cause	Measure
	Incompatibility error/software error in one of the communication partners even with correct telegram CRC.	– Switch the device off and on again. – If the error occurs repeatedly, contact SEW-EURODRIVE Service.

Error: 67.28 (431Chex | 17180dec) Description: Timeout		
	Response: FS – warning	
	Cause	Measure
	Safety protocol signaled timeout.	– Make sure that the communication path is not interrupted (cables, voltages, load). – Make sure that the communication channel between fieldbus master and fieldbus slave has been configured correctly. – Make sure that the monitoring times set in the fieldbus master are not too short.

33955948/EN – 05/2026

Error: 67.29 (431Dhex | 17181dec) Description: F-PI data too short		
	Response: FS – system error	
	Cause	Measure
	F-profile variant needs more data than has been received.	– Check the parameterization of the safety controller. – Make sure that the correct F-module of the device description file (GSDML file) has been assigned to the corresponding slot of the hardware configuration.

Error: 67.30 (431Ehex | 17182dec) Description: Error restarting CIP Safety™ communication		
	Response: FS – system error	
	Cause	Measure
	A fault was detected when restarting the CIP Safety™ communication. Process aborted. The existing data is retained.	– Check parameterization. – Acknowledge the error. – Repeat the process.

Error: 67.100 (4364hex | 17252dec) Description: Safety protocol message		
	Response: FS – message	
	Cause	Measure
	Safety protocol signaled receipt of zero telegram or connection not established correctly.	– Acknowledge the message. – If the message occurs again, check the communication channel.

Error: 67.131 (4383hex | 17283dec) Description: CIP Safety™ configuration started		
	Response: No response	
	Cause	Measure
	The user has activated the CIP Safety™ protocol.	For information only.

Error: 67.140 (438Chex | 17292dec) Description: Restart by CIP Safety™		
	Response: FS – message	
	Cause	Measure
	CIP Safety™ triggered a restart.	For information only.

Error: 67.141 (438Dhex | 17293dec) Description: Error in safety stack control		
	Response: FS – message	
	Cause	Measure
	Error in safety stack control (SSC) process.	For information only.

33955948/EN – 05/2026

Error: 67.142 (438Ehex | 17294dec) Description: Error in safety validator connection establishment engine		
	Response: FS – message	
	Cause	Measure
	Error in SCE in safety open sequence in content of receive data or in transmission of response data.	For information only.

Error: 67.143 (438Fhex | 17295dec) Description: Error in safety validator connection establishment engine		
	Response: FS – message	
	Cause	Measure
	Error in SCE in safety close sequence in content of receive data or in transmission of response data.	For information only.

Error: 67.144 (4390hex | 17296dec) Description: Error in safety message router object		
	Response: FS – message	
	Cause	Measure
	Error in SCE while receiving or transmitting an explicit message.	For information only.

Error: 67.145 (4391hex | 17297dec) Description: Error in safety supervisor object		
	Response: FS – message	
	Cause	Measure
	Fault detected in the safety supervisor object (SSO): – in the communication connection to the fieldbus card – in the safety open process – in the Propos Apply TUNID service	For information only.

Error: 67.146 (4392hex | 17298dec) Description: Error in safety validator object		
	Response: FS – message	
	Cause	Measure
	Error in the Safety Validator Object (SVO) in the content of the I/O data received message.	For information only.

Error: 67.147 (4393hex | 17299dec) Description: Error in safety validator client object		
	Response: FS – message	
	Cause	Measure
	Fault in the safety validator client object (SVC). The TCOO message was received with incorrect ping status.	For information only.

Error: 67.148 (4394hex | 17300dec) Description: Error in safety validator client object		
	Response: FS – message	
	Cause	Measure
	Error in safety validator client object (SVC) while checking received TCOO message.	For information only.

Error: 67.149 (4395hex | 17301dec) Description: Error in safety validator server object		
	Response: FS – message	
	Cause	Measure
	Error in safety validator server object (SVS) while checking received message.	For information only.

Error: 67.150 (4396hex | 17302dec) Description: Error in safety validator server object		
	Response: FS – message	
	Cause	Measure
	Error in safety validator server object (SVS) while checking received message.	For information only.

Error: 67.151 (4397hex | 17303dec) Description: Error in CIP connection path EPATH		
	Response: FS – message	
	Cause	Measure
	Error analyzing CIP connection path EPATH.	For information only.

Error: 67.152 (4398hex | 17304dec) Description: Error in connection configuration object		
	Response: FS – message	
	Cause	Measure
	Error detected in connection configuration object (CCO).	For information only.

33955948/EN – 05/2026

Error: 67.153 (4399hex | 17305dec) Description: Error writing to safety key		
	Response: FS – message	
	Cause	Measure
	Fault in the SAPL Store KeyMem Data process. Process aborted. The existing data is retained.	For information only.

Error: 67.154 (439Ahex | 17306dec) Description: Error when restarting via MOVISUITE®		
	Response: FS – log	
	Cause	Measure
	Fault detected in the SAPL Reset Ownership process via MOVISUITE®. Process aborted. The existing data is retained.	For information only.

Error: 67.155 (439Bhex | 17307dec) Description: Error in safety validator connection establishment engine TUNID		
	Response: FS – message	
	Cause	Measure
	Error checking the target unique network identifier (TUNID).	– Make sure that the IP address in the originator and the target is identical. – Make sure that the SNN in the originator and the target is identical.

Error: 67.156 (439Chex | 17308dec) Description: Error in safety validator connection establishment engine SCID		
	Response: FS – message	
	Cause	Measure
	Error checking safety configuration identifier (SCID).	Check the configuration of the following SCID values: – Combination of the values of the safety configuration CRC (SCCRC) and the safety configuration – Timestamp (SCTS)

Error: 67.157 (439Dhex | 17309dec) Description: Error in safety validator connection establishment engine EKEY		
	Response: FS – message	
	Cause	Measure
	Error in the electronic key.	Check the configuration of the target electronic key in the engineering tool of the controller.

33955948/EN – 05/2026

Error: 67.158 (439Ehex | 17310dec) Description: Error in safety validator server client object timeout		
	Response: FS – message	
	Cause	Measure
	Safety protocol signaled timeout.	– Make sure that the communication path was not interrupted (cables, voltages, load). – Make sure that the communication channel between originator and target has been configured correctly. – Make sure that the monitoring times set in the originator are not too low.

13.9.17 Error 68 Safe communication profile

Error: 68.05 (4405hex | 17413dec) Description: Wrong connection ID		
	Response: FS – warning	
	Cause	Measure
	Connection established with wrong communication partner.	– Set the same connection ID in the fieldbus controller and the fieldbus axis group member. – Make sure that the communication channel between fieldbus controller and fieldbus axis group member has been configured correctly.

Error: 68.06 (4406hex | 17414dec) Description: Wrong ISOFAST® protocol format		
	Response: FS – warning	
	Cause	Measure
	Wrong protocol parameters detected.	– Set the same ISOFAST® protocol format in the fieldbus controller and the fieldbus axis group member. – Make sure that the communication channel between fieldbus controller and fieldbus axis group member has been configured correctly.

33955948/EN – 05/2026

Error: 68.07 (4407hex | 17415dec) Description: Wrong CRC value of telegram		
	Response: FS – warning	
	Cause	Measure
	The error can be caused as follows: – Wrong safe communication profile used. – Wrong data lengths set/transferred. – Protocol not set correctly. – Communication path distorted.	– Set the same safe communication profile in the fieldbus controller and the fieldbus axis group member. – Make sure that the communication channel between fieldbus controller and fieldbus axis group member has been configured correctly. – Make sure that all cables are routed properly and all safety cards are connected correctly.

Error: 68.08 (4408hex | 17416dec) Description: Different configuration in fieldbus controller and fieldbus station		
	Response: FS – warning	
	Cause	Measure
	Fieldbus master expects another configuration than set in fieldbus station.	– Make sure that the ParCRCBus checksum from the acceptance report is entered correctly in the fieldbus controller. – Set the same safe communication profile in the fieldbus controller and the fieldbus axis group member.

Error: 68.10 (440Ahex | 17418dec) Description: Configuration and application of fieldbus station not plausible		
	Response: FS – warning	
	Cause	Measure
	Transferred configuration of fieldbus station does not match application of fieldbus station.	Correct the parameter values of the fieldbus station.

Error: 68.64 (4440hex | 17472dec) Description: Different addresses of PROFIsafe communication		
	Response: FS – warning	
	Cause	Measure
	Different addresses detected in fieldbus controller and fieldbus station for PROFIsafe communication (F_Dest_Add).	Set the same address of PROFIsafe communication in the fieldbus controller and the fieldbus station.

Error: 68.65 (4441hex | 17473dec) Description: Invalid address of PROFIsafe communication		
	Response: FS – warning	
	Cause	Measure
	Invalid PROFIsafe communication address (F_Dest_Add).	Set a valid address.

33955948/EN – 05/2026

Error: 68.66 (4442hex | 17474dec) **Description: Invalid failsafe source address**		
	Response: FS – warning	
	Cause	Measure
	The error can be caused as follows: – The failsafe source address (F_Source_Add) is not valid. – Different failsafe source addresses were detected in the fieldbus controller and the fieldbus axis group member.	– Set a valid failsafe source address. – Set the same failsafe source address in the fieldbus controller and the fieldbus axis group member.

Error: 68.67 (4443hex | 17475dec) **Description: Invalid watchdog time for PROFIsafe communication**		
	Response: FS – warning	
	Cause	Measure
	Watchdog time for PROFIsafe communication (F_WD_Time, F_WD_Time_2) is 0 ms.	Set a valid watchdog time in the fieldbus controller.

Error: 68.68 (4444hex | 17476dec) **Description: Safety class of device exceeded**		
	Response: FS – warning	
	Cause	Measure
	Safety class (SIL) of application exceeded safety class (F_SIL) of device.	Check the safety parameters in the configuration tool of the fieldbus controller.

Error: 68.69 (4445hex | 17477dec) **Description: Different CRC lengths**		
	Response: FS – warning	
	Cause	Measure
	The set CRC length ("F_CRC_Length" parameter) does not match the length of the received CRC values.	Check the safety parameters in the configuration tool of the fieldbus controller.

Error: 68.70 (4446hex | 17478dec) **Description: Wrong version of F parameter data set**		
	Response: FS – warning	
	Cause	Measure
	Wrong version of safety parameter data set.	Check the safety parameters in the configuration tool of the fieldbus master.

33955948/EN – 05/2026

Error: 68.71 (4447hex | 17479dec) Description: CRC1 error due to inconsistent safety parameters		
	Response: FS – warning	
	Cause	Measure
	Data of received safety parameters not consistent.	Check the safety parameters in the configuration tool of the fieldbus controller.

Error: 68.72 (4448hex | 17480dec) Description: Faulty device information		
	Response: FS – warning	
	Cause	Measure
	Faulty device specification or diagnostics information.	– Acknowledge the warning. – Establish safe communication again. – If the warning occurs repeatedly, switch the device off and on again. For further support, contact SEW-EURODRIVE Service.

Error: 68.73 (4449hex | 17481dec) Description: Watchdog time exceeded while saving safety parameters	
Response: No response	
Cause	Measure
Watchdog time exceeded while saving safety parameters.	Check the safety parameters in the configuration tool of the fieldbus master.
Reserved	Reserved

Error: 68.74 (444Ahex | 17482dec) Description: Watchdog time exceeded while restoring safety parameters	
Response: No response	
Cause	Measure
Watchdog time exceeded while restoring safety parameters.	Check the safety parameters in the configuration tool of the fieldbus master.
Reserved	Reserved

Error: 68.75 (444Bhex | 17483dec) Description: Inconsistent parameter CRC (iPar_CRC)	
Response: FS – warning	
Cause	Measure
Inconsistent parameter CRC (iPar_CRC).	Check the safety parameters in the configuration tool of the fieldbus master.

Error: 68.76 (444Chex | 17484dec) Description: Safety parameter "F_Block_ID" not supported	
Response: No response	
Cause	Measure
Safety parameter "F_Block_ID" not supported.	Check the safety parameters in the configuration tool of the fieldbus controller.
Reserved	Reserved

Error: 68.77 (444Dhex | 17485dec) Description: CRC2 error due to transfer of inconsistent data	
Response: No response	
Cause	Measure
Data of sent safety parameters not consistent.	Check the safety parameters in the configuration tool of the fieldbus controller.
Reserved	Reserved

Error: 68.78 (444Ehex | 17486dec) Description: Watchdog time exceeded while transferring data	
Response: No response	
Cause	Measure
Watchdog time exceeded (F_WD_Time, F_WD_Time_2) while transferring data.	Check the safety parameters in the configuration tool of the fieldbus controller.
Reserved	Reserved

Error: 68.79 (444Fhex | 17487dec) Description: Reserved for future error messages	
Response: No response	
Cause	Measure
Reserved	Reserved

Error: 68.80 (4450hex | 17488dec) Description: Reserved for future error messages	
Response: No response	
Cause	Measure
Reserved	Reserved

Error: 68.81 (4451hex | 17489dec) Description: Reserved for future error messages	
Response: No response	
Cause	Measure
Reserved	Reserved

33955948/EN – 05/2026

Error: 68.82 (4452hex | 17490dec) Description: Reserved for future error messages		
	Response: No response	
	Cause	Measure
	Reserved	Reserved

Error: 68.83 (4453hex | 17491dec) Description: Reserved for future error messages		
	Response: No response	
	Cause	Measure
	Reserved	Reserved

Error: 68.84 (4454hex | 17492dec) Description: Reserved for future error messages		
	Response: No response	
	Cause	Measure
	Reserved	Reserved

Error: 68.85 (4455hex | 17493dec) Description: Reserved for future error messages		
	Response: No response	
	Cause	Measure
	Reserved	Reserved

Error: 68.86 (4456hex | 17494dec) Description: Reserved for future error messages		
	Response: No response	
	Cause	Measure
	Reserved	Reserved

Error: 68.87 (4457hex | 17495dec) Description: Reserved for future error messages		
	Response: No response	
	Cause	Measure
	Reserved	Reserved

Error: 68.88 (4458hex | 17496dec) Description: Reserved for future error messages		
	Response: No response	
	Cause	Measure
	Reserved	Reserved

33955948/EN – 05/2026

Error: 68.89 (4459hex | 17497dec) Description: Reserved for future error messages		
	Response: No response	
	Cause	Measure
	Reserved	Reserved

Error: 68.90 (445Ahex | 17498dec) Description: Reserved for future error messages		
	Response: No response	
	Cause	Measure
	Reserved	Reserved

Error: 68.91 (445Bhex | 17499dec) Description: Reserved for future error messages		
	Response: No response	
	Cause	Measure
	Reserved	Reserved

Error: 68.92 (445Chex | 17500dec) Description: Reserved for future error messages		
	Response: No response	
	Cause	Measure
	Reserved	Reserved

Error: 68.93 (445Dhex | 17501dec) Description: Reserved for future error messages		
	Response: No response	
	Cause	Measure
	Reserved	Reserved

Error: 68.94 (445Ehex | 17502dec) Description: Reserved for future error messages		
	Response: No response	
	Cause	Measure
	Reserved	Reserved

Error: 68.95 (445Fhex | 17503dec) Description: Reserved for future error messages		
	Response: No response	
	Cause	Measure
	Reserved	Reserved

33955948/EN – 05/2026

Error: 68.96 (4460hex | 17504dec) Description: Reserved for future error messages		
	Response: No response	
	Cause	Measure
	Reserved	Reserved

Error: 68.164 (44A4hex | 17572dec) Description: Different addresses of PROFIsafe communication		
	Response: FS – message	
	Cause	Measure
	Different addresses detected in fieldbus controller and fieldbus station for PROFIsafe communication (F_Dest_Add).	Set the same address of PROFIsafe communication in the fieldbus controller and the fieldbus station.

Error: 68.165 (44A5hex | 17573dec) Description: Invalid address of PROFIsafe communication		
	Response: FS – message	
	Cause	Measure
	Invalid PROFIsafe communication address (F_Dest_Add).	Set a valid address.

Error: 68.166 (44A6hex | 17574dec) Description: Invalid failsafe source address		
	Response: FS – message	
	Cause	Measure
	The error can be caused as follows: – The failsafe source address (F_Source_Add) is not valid. – Different failsafe source addresses were detected in the fieldbus controller and the fieldbus axis group member.	– Set a valid failsafe source address. – Set the same failsafe source address in the fieldbus controller and the fieldbus axis group member.

Error: 68.167 (44A7hex | 17575dec) Description: Invalid watchdog time for PROFIsafe communication		
	Response: FS – message	
	Cause	Measure
	Watchdog time for PROFIsafe communication (F_WD_Time, F_WD_Time_2) is 0 ms.	Set a valid watchdog time in the fieldbus controller.

33955948/EN – 05/2026

Error: 68.168 (44A8hex | 17576dec) Description: Safety class of device exceeded		
	Response: FS – message	
	Cause	Measure
	Safety class (SIL) of application exceeded safety class (F_SIL) of device.	Check the safety parameters in the configuration tool of the fieldbus controller.

Error: 68.169 (44A9hex | 17577dec) Description: Different CRC lengths		
	Response: FS – message	
	Cause	Measure
	The set CRC length ("F_CRC_Length" parameter) does not match the length of the received CRC values.	Check the safety parameters in the configuration tool of the fieldbus controller.

Error: 68.170 (44AAhex | 17578dec) Description: Wrong version of F parameter data set		
	Response: FS – message	
	Cause	Measure
	Wrong version of safety parameter data set.	Check the safety parameters in the configuration tool of the fieldbus master.

Error: 68.171 (44ABhex | 17579dec) Description: CRC1 error due to inconsistent safety parameters		
	Response: FS – message	
	Cause	Measure
	Data of received safety parameters not consistent.	Check the safety parameters in the configuration tool of the fieldbus controller.

Error: 68.172 (44AChex | 17580dec) Description: Faulty device information		
	Response: FS – message	
	Cause	Measure
	Faulty device specification or diagnostics information.	– Acknowledge the warning. – Establish safe communication again. – If the warning occurs repeatedly, switch the device off and on again. For further support, contact SEW-EURODRIVE Service.

33955948/EN – 05/2026

Error: 68.173 (44ADhex | 17581dec) Description: Watchdog time exceeded while saving safety parameters		
	Response: FS – message	
	Cause	Measure
	Watchdog time exceeded while saving safety parameters.	Check the safety parameters in the configuration tool of the fieldbus master.
	Reserved	Reserved

Error: 68.174 (44AEhex | 17582dec) Description: Watchdog time exceeded while restoring safety parameters		
	Response: FS – message	
	Cause	Measure
	Watchdog time exceeded while restoring safety parameters.	Check the safety parameters in the configuration tool of the fieldbus master.
	Reserved	Reserved

Error: 68.175 (44AFhex | 17583dec) Description: Inconsistent parameter CRC (iPar_CRC)		
	Response: FS – message	
	Cause	Measure
	Inconsistent parameter CRC (iPar_CRC).	Check the safety parameters in the configuration tool of the fieldbus master.

Error: 68.176 (44B0hex | 17584dec) Description: Safety parameter "F_Block_ID" not supported		
	Response: FS – message	
	Cause	Measure
	Safety parameter "F_Block_ID" not supported.	Check the safety parameters in the configuration tool of the fieldbus controller.

Error: 68.177 (44B1hex | 17585dec) Description: CRC2 error due to transfer of inconsistent data		
	Response: FS – message	
	Cause	Measure
	Data of sent safety parameters not consistent.	Check the safety parameters in the configuration tool of the fieldbus controller.

Error: 68.178 (44B2hex | 17586dec) Description: Watchdog time exceeded while transferring data		
	Response: FS – message	
	Cause	Measure
	Watchdog time exceeded (F_WD_Time, F_WD_Time_2) while transferring data.	Check the safety parameters in the configuration tool of the fieldbus controller.

33955948/EN – 05/2026

Error: 68.179 (44B3hex | 17587dec) Description: Reserved for future error messages		
	Response: FS – message	
	Cause	Measure
	Reserved	Reserved

Error: 68.180 (44B4hex | 17588dec) Description: Reserved for future error messages		
	Response: FS – message	
	Cause	Measure
	Reserved	Reserved

Error: 68.181 (44B5hex | 17589dec) Description: Reserved for future error messages		
	Response: FS – message	
	Cause	Measure
	Reserved	Reserved

Error: 68.182 (44B6hex | 17590dec) Description: Reserved for future error messages		
	Response: FS – message	
	Cause	Measure
	Reserved	Reserved

Error: 68.183 (44B7hex | 17591dec) Description: Reserved for future error messages		
	Response: FS – message	
	Cause	Measure
	Reserved	Reserved

Error: 68.184 (44B8hex | 17592dec) Description: Reserved for future error messages		
	Response: FS – message	
	Cause	Measure
	Reserved	Reserved

Error: 68.185 (44B9hex | 17593dec) Description: Reserved for future error messages		
	Response: FS – message	
	Cause	Measure
	Reserved	Reserved

33955948/EN – 05/2026

Error: 68.186 (44BAhex | 17594dec) Description: Reserved for future error messages		
	Response: FS – message	
	Cause	Measure
	Reserved	Reserved

Error: 68.187 (44BBhex | 17595dec) Description: Reserved for future error messages		
	Response: FS – message	
	Cause	Measure
	Reserved	Reserved

Error: 68.188 (44BChex | 17596dec) Description: Reserved for future error messages		
	Response: FS – message	
	Cause	Measure
	Reserved	Reserved

Error: 68.189 (44BDhex | 17597dec) Description: Reserved for future error messages		
	Response: FS – message	
	Cause	Measure
	Reserved	Reserved

Error: 68.190 (44BEhex | 17598dec) Description: Reserved for future error messages		
	Response: FS – message	
	Cause	Measure
	Reserved	Reserved

Error: 68.191 (44BFhex | 17599dec) Description: Reserved for future error messages		
	Response: FS – message	
	Cause	Measure
	Reserved	Reserved

Error: 68.192 (44C0hex | 17600dec) Description: Reserved for future error messages		
	Response: FS – message	
	Cause	Measure
	Reserved	Reserved

33955948/EN – 05/2026

Error: 68.193 (44C1hex | 17601dec) Description: Reserved for future error messages		
	Response: FS – message	
	Cause	Measure
	Reserved	Reserved

Error: 68.194 (44C2hex | 17602dec) Description: Reserved for future error messages		
	Response: FS – message	
	Cause	Measure
	Reserved	Reserved

Error: 68.195 (44C3hex | 17603dec) Description: Reserved for future error messages		
	Response: FS – message	
	Cause	Measure
	Reserved	Reserved

Error: 68.196 (44C4hex | 17604dec) Description: Reserved for future error messages		
	Response: FS – message	
	Cause	Measure
	Reserved	Reserved

13.9.18 Error 69 Micro controller error or diagnostics error

Error: 69.01 (4501hex | 17665dec) Description: Processor core error		
	Response: FS – system error	
	Cause	Measure
	Error in processor core.	– Switch the device off and on again. – If the error occurs repeatedly, replace the safety card and send it together with the error number to SEW-EURODRIVE. For further support, contact SEW-EURODRIVE Service.

33955948/EN – 05/2026

Error: 69.02 (4502hex | 17666dec) Description: Flash memory error		
	Response: FS – critical fault	
	Cause	Measure
	Error in flash memory.	– Switch the device off and on again. – If the error occurs repeatedly, replace the safety card and send it together with the error number to SEW-EURODRIVE. For further support, contact SEW-EURODRIVE Service.

Error: 69.03 (4503hex | 17667dec) Description: SRAM memory error		
	Response: FS – critical fault	
	Cause	Measure
	Error in SRAM memory.	– Switch the device off and on again. – If the error occurs repeatedly, replace the safety card and send it together with the error number to SEW-EURODRIVE. For further support, contact SEW-EURODRIVE Service.

Error: 69.04 (4504hex | 17668dec) Description: Configuration register error		
	Response: FS – critical fault	
	Cause	Measure
	Error detected in configuration registers of processor.	– Switch the device off and on again. – If the error occurs repeatedly, replace the safety card and send it together with the error number to SEW-EURODRIVE. For further support, contact SEW-EURODRIVE Service.

Error: 69.100 (4564hex | 17764dec) Description: Memory error for safety parameters		
	Response: FS – message	
	Cause	Measure
	Error in the safety parameter memory.	– Switch the device off and on again. – If the error occurs repeatedly, replace the safety card and send it together with the error number to SEW-EURODRIVE. For further support, contact SEW-EURODRIVE Service.

33955948/EN – 05/2026

13.9.19 Error 70 Safe brake system

Error: 70.01 (4601hex | 17921dec) **Description: Cancellation of safe brake test. No enable signal.**		
	Response: FS – warning	
	Cause	Measure
	Enable signal revoked during safe brake test.	Make sure that the enable signal is active during the safe brake test.

Error: 70.02 (4602hex | 17922dec) **Description: Cancellation of safe brake test. Apply brake requested.**		
	Response: FS – warning	
	Cause	Measure
	Basic unit requested brake application during safe brake test.	Make sure that no drive function is activated or no axis is in fault status.

Error: 70.03 (4603hex | 17923dec) **Description: Cancellation of safe brake test. Safety subfunction active.**		
	Response: FS – warning	
	Cause	Measure
	Instance of safety subfunctions STO, SOS, SSx, SSR, SLI or SLP activated during safe brake test.	Make sure that no safety subfunction is activated during the safe brake test (only SLS, SSM are permitted).

Error: 70.04 (4604hex | 17924dec) **Description: Cancellation of safe brake test. Load torque tolerance exceeded.**		
	Response: FS – warning	
	Cause	Measure
	Measured load torque outside configured tolerance.	Make sure that the load torque deviates only by the configured tolerance value.

Error: 70.05 (4605hex | 17925dec) **Description: Cancellation of safe brake test. Test torque not reached.**		
	Response: FS – warning	
	Cause	Measure
	Basic unit does not deliver parameterized test torque.	– Check the parameterization of the device and adjust if necessary. – Make sure that the device has enough power for the test torque.

33955948/EN – 05/2026

Error: 70.06 (4606hex | 17926dec) Description: Cancellation of safe brake test. Upper limit of test range exceeded.		
	Response: FS – warning	
	Cause	Measure
	Upper limit of configured test range exceeded during safe brake test.	– Configure a sufficiently large test range (test distance > retraction distance). – Parameterize the test direction correctly. – Make sure that the movements can be performed and the system does not slip.

Error: 70.07 (4607hex | 17927dec) Description: Cancellation of safe brake test. Lower limit of test range exceeded.		
	Response: FS – warning	
	Cause	Measure
	Lower limit of configured test range exceeded during safe brake test.	– Configure a sufficiently large test range (test distance > retraction distance). – Parameterize the test direction correctly. – Make sure that the movements can be performed and the system does not slip.

Error: 70.09 (4609hex | 17929dec) Description: Cancellation of safe brake test. "Distance tolerance positioning" parameter exceeded.		
	Response: FS – warning	
	Cause	Measure
	Measured retraction distance differs from parameterized retraction distance by more than "Distance tolerance positioning" parameter.	– Check the parameterization of the device and adjust if necessary. – Check the value of parameter "Distance tolerance positioning" and increase if necessary. – Make sure that the device has enough power for the test torque.

Error: 70.10 (460Ahex | 17930dec) Description: Cancellation of safe brake test. FCB BDS fault.		
	Response: FS – warning	
	Cause	Measure
	FCB BDS in basic device returned an unexpected value. Device cannot reach configured load torques or cannot maintain position.	Do not activate higher-priority FCB BDS in the basic unit during the safe brake test.

33955948/EN – 05/2026

Error: 70.11 (460Bhex | 17931dec) Description: Cancellation of safe brake test. Timeout of communication with basic device.		
	Response: FS – warning	
	Cause	Measure
	Faulty communication with basic unit.	– Repeat the test. – If the error occurs repeatedly, contact SEW-EURODRIVE Service.
	Control of the brake test has been interrupted.	– Repeat the test. – Check whether a controller prevents the basic unit from being enabled. – Check whether an FCB smaller than 23 was active in the basic unit at the time of the error.

Error: 70.12 (460Chex | 17932dec) Description: Cancellation of safe brake test. No safe digital output F-DO parameterized for the SBC safety subfunction.		
	Response: FS – warning	
	Cause	Measure
	None of the safe digital outputs F-DO is set to brake control.	– Check the parameterization of the safety card. – Activate the SBC safety subfunction on one of the safe digital outputs F-DO. – Connect the brake rectifier at the same output channel F-DO (e.g. SBM safety subfunction).

Error: 70.13 (460Dhex | 17933dec) Description: Cancellation of safe brake test. Positional tolerance exceeded in idle state.		
	Response: FS – warning	
	Cause	Measure
	Maximum movement permitted in idle state exceeded. Brake no longer holds torque or device cannot hold load.	– Check the positional tolerance and adjust if necessary. – Make sure the device delivers the required braking torque.

Error: 70.14 (460Ehex | 17934dec) Description: Cancellation of safe brake test. Speed above minimum speed after positioning.		
	Response: FS – warning	
	Cause	Measure
	Speed greater than parameterized minimum speed detected at end of retraction positioning.	– Check the parameterization of the device and adjust if necessary. – Make sure the device is not subject to overload.

33955948/EN – 05/2026

Error: 70.15 (460Fhex | 17935dec) Description: Cancellation of safe brake test. Current speed above minimum speed after activation of FCB BDS.		
	Response: FS – warning	
	Cause	Measure
	After ready signal from the basic unit (drive at standstill), a speed greater than the parameterized minimum speed has been detected.	Check the minimum speed, and adjust if necessary.

Error: 70.16 (4610hex | 17936dec) Description: Cancellation of safe brake test. Effective direction of torque not correct.		
	Response: FS – warning	
	Cause	Measure
	Torque specified by basic unit has wrong effective direction for current test step.	– Check the parameterization of the device and adjust if necessary. – Make sure that direction of rotation reversal is correct.

Error: 70.17 (4611hex | 17937dec) Description: Cancellation of safe brake test. New device parameterization.		
	Response: FS – system error	
	Cause	Measure
	Safety card parameterized again using Assist CS.. tool while safe brake test is running.	– Acknowledge the error. – Restart the safe brake test. – Do not parameterize the safety card during the safe brake test.

Error: 70.18 (4612hex | 17938dec) Description: Cancellation of safe brake test. Fault acknowledgment.		
	Response: FS – system error	
	Cause	Measure
	Fault acknowledged during safe brake test.	Deactivate the brake test before acknowledging the fault.

Error: 70.19 (4613hex | 17939dec) Description: Cancellation of safe brake test. Safety subfunction signals limit value violation.		
	Response: FS – system error	
	Cause	Measure
	Limit violation signaled by drive safety function active at the same time (e.g. SLS) during safe brake test.	– Use the error memory to check which safety subfunction signaled the limit violation. – Refer to the measures in the fault description to eliminate the fault.

Error: 70.20 (4614hex | 17940dec) Description: Cancellation of safe brake test. Safety card fault.		
	Response: FS – warning	
	Cause	Measure
	Fault detected by safety card during safe brake test.	– Use the fault memory to check which fault occurred at the same time. – Refer to the measures in the fault description to eliminate the fault.

Error: 70.22 (4616hex | 17942dec) Description: Cancellation of safe brake test. No measured values in load torque test.		
	Response: FS – system error	
	Cause	Measure
	No torque or insufficient values measured during load torque test.	– Deactivate the load torque test. To do so, set the load torque for horizontal applications to "0". – Increase the test duration.

Error: 70.23 (4617hex | 17943dec) Description: Cancellation of safe brake test. No measured values.		
	Response: FS – warning	
	Cause	Measure
	No braking torque or insufficient values measured during safe brake test.	– Increase the test duration. – If the error occurs repeatedly, replace the device and send it together with the error number to SEW-EURODRIVE. For further support, contact SEW-EURODRIVE Service.

Error: 70.24 (4618hex | 17944dec) Description: Inverter firmware not compatible		
	Response: FS – warning	
	Cause	Measure
	The parameters "Duration of torque buildup" and "Duration of torque reduction" require an inverter firmware from version V 6.00.	– Set the value "0" for both parameters. – Perform a firmware update.

13.10 Device replacement

Device replacement is only possible if an identical replacement device with the same or later firmware version is used. Deviating device configurations lead to fault E25.06 and can be acknowledged with parameter acceptance. The device can then be used without further startup. If a device needs to be replaced, the following procedures apply.

33955948/EN – 05/2026

13.10.1 Exclusive use of the CMM.. memory module

If the inverter is equipped with a CMM.. memory module, the parameter and configuration settings are stored on the memory module. By plugging the memory module into another inverter, this data is available so that the inverter is immediately ready for operation for the specific application.

Device replacement with an identical replacement device

If an identical inverter (voltage, current and variant) is used during a device replacement, the inverter is started up immediately and is ready for operation. When using the CSB or CSL variant, the memory module also serves as a safety key.

Device replacement with a different replacement device

If a different inverter (voltage, current and variant) is used when a device is replaced, error message "25.70 NV memory initialization" is displayed. You can acknowledge this fault by opening the "Fault reset with parameter acceptance" menu item, and you must ensure that the information that was provided via the previous options (e.g. encoder signals via encoder option) reach the inverter through different means or are deselected.

Alternatives for device replacement

Alternatively, the device can be reset to the delivery state. A new startup is then required.

Removing the memory module during operation

If a memory module is inserted in the delivery state, it must not be removed during operation. If a memory module is removed during operation, the following error message is displayed: "33.13 System initialization: Memory module removed".

13.10.2 Using MOVISUITE®

The MOVISUITE® engineering software can be used to export and import parameter and configuration settings.

13.10.3 Using a CBG.. keypad

When using a keypad, the parameter and configuration settings can be stored on the keypad. By plugging the keypad into another inverter and activating data transmission, data is transferred to the inverter. After the transmission is complete, the inverter is immediately ready for operation for the specific application.

13.10.4 Using a MOVI-C® CONTROLLER

The "Update configuration" function can be started using the MOVISUITE® engineering software at any time, usually after completed startup of the devices and the controller.

Using this function, all parameter and configuration settings of the devices and the controller are saved on the memory card of the controller and are provided with a checksum.

When the controller is switched on, the data on the memory card and the data on the connected device are compared in a test to see if they match. In case a defective device has been replaced previously, the controller recognizes that the data on the memory card does not match the data of the new device. In this case, the controller loads the data of the memory card to the device.

33955948/EN – 05/2026

In addition, changes in the device that have not been saved using the "Update configuration" function are overwritten. The process is performed automatically.

MOVI-C® CONTROLLER with CMM.. memory module in the inverter

If the data management (axis data set recovery) of the MOVI-C® CONTROLLER is used, the parameter and configuration settings of the controller are always transferred to the inverter.

The data is on the memory card of the MOVI-C® CONTROLLER. If the data management of the MOVI-C® CONTROLLER is not active, the memory source can be set in index 8431.20 (memory source) as follows:

- 0 - Any

  The parameter and configuration settings are written both to the internal device memory of the inverter and to the CMM.. memory module. Thus, the data is synchronized on both storage media.
- 1 - Internal memory

  The inverter reads or writes the parameter and configuration settings to the internal device memory of the inverter.
- 2 - Replaceable memory module

  The inverter reads or writes the parameter and configuration settings to the CMM.. memory module.

MOVI-C® CONTROLLER without CMM.. memory module in the inverter

If the data management (axis data set recovery) of the MOVI-C® CONTROLLER is used, the parameter and configuration settings of the controller are always transferred to the inverter.

13.11 Service – functional safety

13.11.1 Modification/changes to the device

- Hardware changes

  Any changes to the CS..A safety option can be performed only by SEW-EURODRIVE.
- Firmware modifications

  Only SEW-EURODRIVE is authorized to make modifications to the firmware.
- Repair

  Only SEW-EURODRIVE is authorized to repair the CS..A safety option.
- Warranty

INFORMATION

The safety certification and any right to claim under limited warranty of SEW-EURODRIVE become void if the user modifies the device internally (e.g. exchange of components, welding parts).

33955948/EN – 05/2026

13.11.2 Status LEDs

The description of the "F-ERR" and "F-RUN" LEDs can be found in chapter "General LEDs" (→ 🗎 484).

13.11.3 Error states of the MOVISAFE® CS..A safety option



⚠ DANGER

The MOVISAFE® CS..A safety option is faulty and automatically restarts in the following cases:

- The DC 24 V supply voltage was switched off and back on.
- The safety option was in standby state.

– Several inverter errors were acknowledged.

Severe or fatal injuries.

- To prevent automatic restart in the aforementioned cases, the parameter *Error status after startup* (8703.240) must be parameterized to "Start inhibit". The "Start inhibit" state must be acknowledged.

Error responses

The occurring errors of the safety option are divided into 7 error classes. Depending on the error class, the error response described in the following table is carried out.

Error class	Error response
FS message	Entry in error memory, no further response
FS warning	Entry in error memory, no further response
FS output error, FS input error, FS encoder error	Entry in error memory and safe state of digital inputs and outputs
FS configuration error	Entry in error memory and safe state of digital inputs and outputs
FS system error	Entry in error memory and safe state of digital inputs and outputs
FS critical error	Entry in error memory and safe state of digital inputs and outputs, no safe communication
FS data error of internal memory	The data error is triggered by faulty data in the RAM and results in a processor restart.

FS message

No error response is carried out in the case of an FS message. An entry is made in the error memory. In addition, the corresponding error code is transferred.

FS warning

No error response is carried out in the case of an FS warning. An entry is made in the error memory. In addition, the corresponding error code is transferred.

An FS warning is information, e.g. about an error in the encoder system, which has no effect with regard to safety technology at the time of occurrence, but which can represent an error at a later time.

33955948/EN – 05/2026

FS – output fault, FS – input fault, FS – encoder fault

FS – output fault

If the safety option detects an error at a safe digital output, all safe digital outputs are switched to the safe state. In addition, the STO safety subfunction is activated and the safety option is set to the safe state. In the FS protocol, the bit of the safe digital output F-DO00 is set to "0" and the bits for the STO safety subfunction and the fault are set to "1".

In addition, the corresponding error code is transferred for the FS output error that occurred.

FS – input error

If the safety option detects an error at a safe digital input, the affected safe digital input is switched to the safe state. If the affected safe digital input is parameterized as dual-channel, both inputs are switched to the safe state. In the FS-protocol, the bits of the affected safe digital inputs are set to "0" and the error bit is set to "1".

In addition, the corresponding error code is transferred for the FS input error that occurred.

INFORMATION

If a safe digital input is assigned to a safety subfunction via function assignment, then this safety subfunction is selected in the event of an FS input error.

At a safe digital input with detected error, the error must first be resolved and the safe state established before acknowledging the FS input error. In this way, a safety subfunction is not erroneously selected after acknowledgment of an FS input error.

FS – encoder error

If the safety option detects an error in the encoder system, this results in a warning if no safety subfunction is activated. The safety option continues to remain operational. If at least one safety subfunction is active, this leads to an FS encoder error. The safety subfunctions switch to the relevant error state. The corresponding error code for the FS encoder error that occurred is transferred.

In the case of errors in the encoder system that are assigned to the error class "FS Encoder error" or "FS System error", the corresponding error response is initiated as soon as the error is detected.

Acknowledging the FS encoder error with activated safety subfunction leads to a restart of the safety subfunction.

INFORMATION

Acknowledgment of a limit violation leads to a different behavior of the activated safety subfunction than the acknowledgment of an FS encoder error.

The response to an FS encoder error can be suppressed using the "Encoder error muting" function or emergency mode. The "Encoder error muting" function can be activated at a safe digital input or via the safe process data. Further information can be found in chapter "Startup of the safety option MOVISAFE® CS..A > "Parameterization of the safety subfunctions > Muting encoder error".

Error messages

If there is a fault in the safety option, the inverter indicates that the safety option is reporting a fault.

Measures for fault elimination and more information on causes can be found using the fault status of the safety option.

FS configuration error

In the event of an FS configuration error, the safety option changes or remains in the "Parameterization" operating state.

33955948/EN – 05/2026

All safe digital inputs and digital outputs are switched to the safe state. In addition, the STO safety subfunction is executed without delay and the safe digital output F-DO00 is disabled. The safety option is set to the safe state.

If a safety protocol was already active, the "Error" bit is set in the process data of the safety protocol. If the configuration error was already present when the safety option was switched on, no safe process data communication is started.

The configuration error can only be corrected by importing a valid configuration. The configuration error cannot be corrected by conducting an error reset via the safety protocol or a safe digital input.

FS system error

In the case of an FS system error, all safe digital inputs and all safe digital outputs are switched to the safe state. In addition, the STO safety subfunction is executed without delay and the safe digital output F-DO00 is disabled. The safety option is set to the safe state.

In the safety protocol, the bit of the safe digital output F-DO00 and the bits of the safe digital inputs F-DI00, F-DI01, F-DI02 and F-DI03 are set to "0". The bits for the STO safety subfunction and the error are set to "1".

In addition, the corresponding error code is transferred for the FS system fault that occurred.

INFORMATION



If the safe digital output is assigned to a safety subfunction via the function assignment, this safety subfunction is selected in the case of an FS system error.

FS critical error

In the case of a critical error, the safety option is set to the safe state. Parameterization of the safety option is not possible. All safe digital inputs and all safe digital outputs are switched to safe state. In addition, the STO safety subfunction is executed without a delay. The sensor supply for the safe digital inputs is also switched to de-energized state. Active safe communication is suspended.

In addition, the corresponding error code is transferred for the critical error that occurred.

If the critical error was caused by the parameterization, you must start the safety option without safety key and then restore the safety option to its delivery state. You can then restart the safety option with safety key.

INFORMATION



Please note that the safety key may only be inserted or removed when the device is switched off.

FS data fault of internal memory

The data error is triggered by faulty data in the RAM and results in a restart of the safety option.

In the case of a data error, all safe digital inputs and all safe digital outputs are switched to the safe state. In addition, the STO safety subfunction is executed without a delay. The safe state of the safety option is activated and a corresponding error code is set.

The data error can be acknowledged via a safe digital input or safe communication.

33955948/EN – 05/2026

Safe communication must first be restored for acknowledgment via safe communication.

Starting behavior of the safety option



⚠ DANGER

After a fault, the safety option automatically restarts if the supply voltage is switched on, if the standby mode is completed, or if certain inverter faults are acknowledged.

Severe or fatal injuries.

- The *Fault status after startup* parameter must be parameterized to "start inhibit". This way, the automatic restart of the safety option is prevented in the cases mentioned above.

In the "Basic settings" of the "Assist CS.." parameterization tool, the starting behavior of the safety option can be defined using the *Fault status after startup* parameter. The following parameter settings are possible:

- "Start inhibit" parameter setting

  The safety option always starts with start inhibit after the supply voltage is switched on. This parameterization is provided for independent operation.

- "No start inhibit" parameter setting

  The safety option starts immediately. Note that faults must be acknowledged by switching the supply voltage off and on again or by quitting standby mode. This means that a fault pending prior to switching off the supply voltage or during standby mode is acknowledged and the safety option starts up. This parameterization is designated for fieldbus operation where the higher-level controller, if necessary, takes over interlocking in case of a fault.

The STO safety subfunction is active for as long as start inhibit is active. Outputs assigned to the STO or SBC function are activated depending on the safety subfunction. If outputs are configured to "F-PO data", they will still be controlled by the higher-level safety controller. The outputs are not set to safe state

Start inhibit is deactivated if one of the following conditions is met:

- An acknowledgment has taken place
- Muting is activated

13.11.4 Error diagnostics

The "Current initial error" error status shows the error that occurred first in the safety option with the corresponding error code, suberror code and error description. For internal purposes, additional error codes are displayed.

The current initial error is the error that occurs after a restart or since the last acknowledgment as the first error with the highest priority.

Error messages

If there is an error in the safety option, this error is indicated by the device. Further information can be found in the chapter "Service" > "Error description for CS..A safety option".

33955948/EN – 05/2026

Diagnostics with MOVISUITE® Assist CS..

In the "Diagnostics" segment, in menu command [MOVISAFE® CS..] > [Fault status], the current error of the safety option is displayed with the corresponding error description.

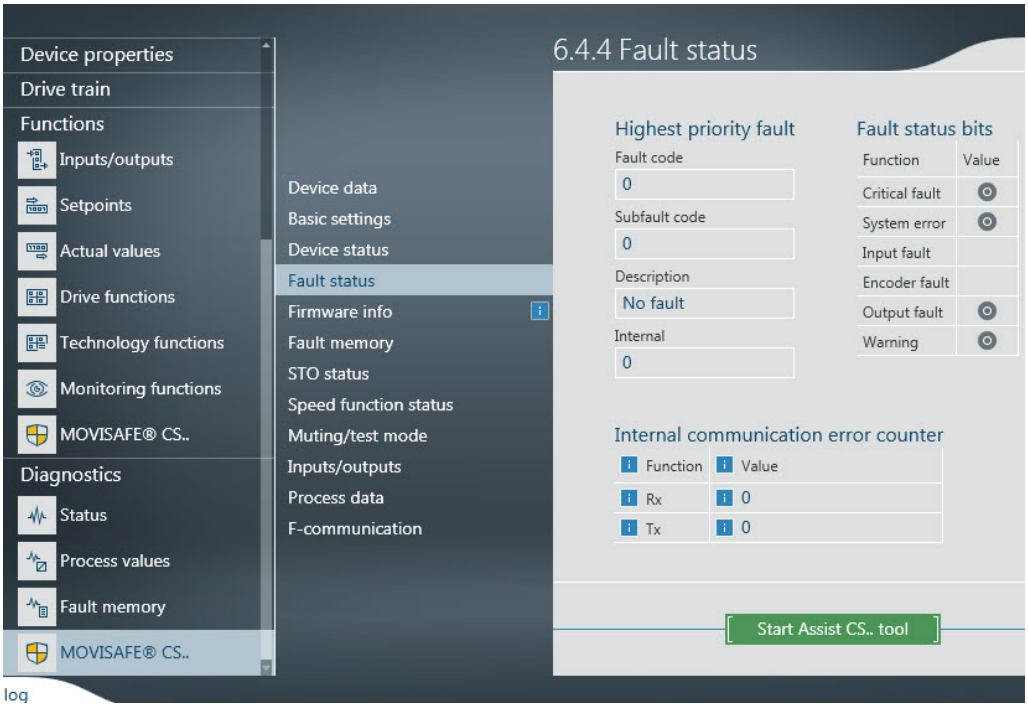

9007221132519563

Diagnostics with PROFIsafe connection

The CS..A safety option with PROFIsafe connection triggers a diagnostic alarm on the F-PLC in the data exchange between the F-PLC (fieldbus host) and the safety option (fieldbus device) in case of an error. Simultaneously, the associated error code is transferred via the communication connection.

The F-PLC responds to the issued diagnostic alarm if the *Diagnostic alarm* assembly parameter is enabled for the safety option in the F-PLC per configuration. Depending on the fieldbus used (PROFINET), the error code of the safety option can be evaluated in the F-PLC. A diagnostic alarm does not trigger an error response in the F-PLC (default setting of the safety option in the F-PLC).

The safety option has PROFIsafe and assembly-specific error codes. All error codes of the CS..A safety option are listed in an error table.

INFORMATION

You can find the structure and the evaluation of a diagnostic data set in the F-PLC in the respective manual of the fieldbus host. In addition, ensure that the current device description file of the SEW-EURODRIVE drive system is always installed in the engineering tool of the F-PLC during configuration.

Error memory

The current initial error and all other subsequent errors are residually saved in the error memory with associated timestamp.

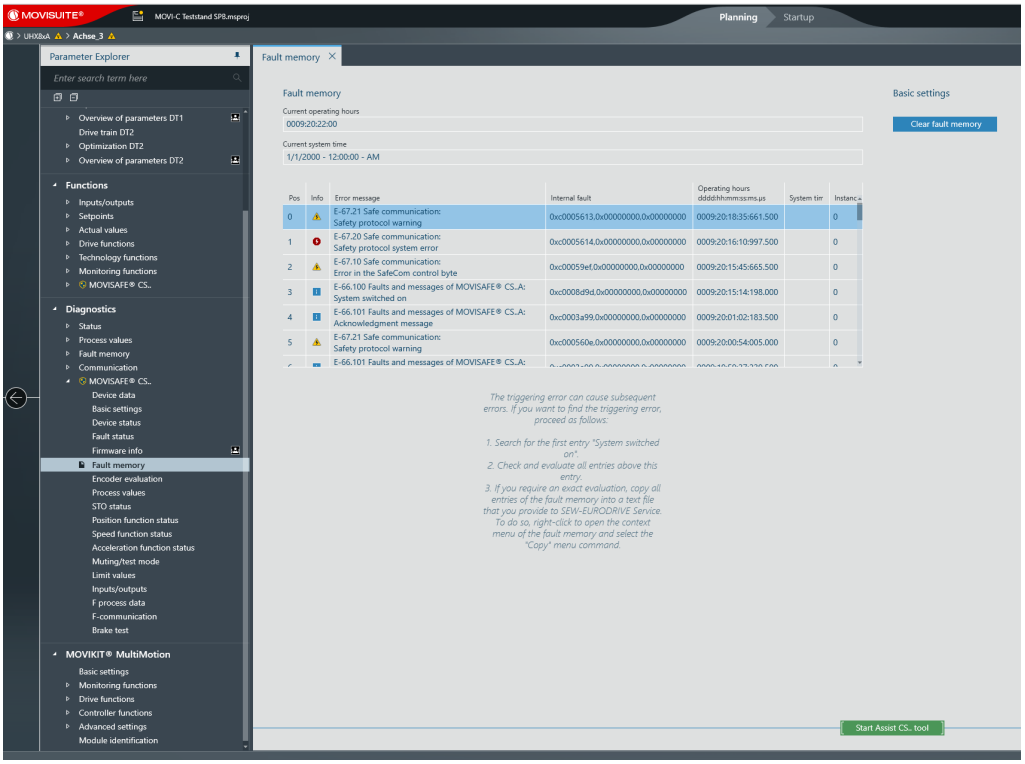

18014420387287947

Additional messages for the errors are entered in the error memory in the columns "Primary error" and "Suberror". These are messages that do not directly trigger an error response of the CS..A safety option. Essentially, these are the message "Power On" (primary error 66 and suberror 100) and the message "Acknowledgment message" (primary error 66 and suberror 101).

In the "Pos" column, the position of the error is displayed. In the "Info" column, a symbol indicates the category of the error. In the "Error message" column, the error number, the main error text and the suberror text is displayed. The timestamp is entered twice in the list. Once as an operating hours counter and once as system time. The system time is a time synchronized by the controller and is based on the Universal Time Coordinated (UTC). The user can set the time from UTC to local time in the controller. The system time is recorded in the error memory after synchronization; no time is displayed in the column beforehand. The "Internal error" column is used for internal purposes. The error memory is organized as a ring memory. The most recently occurring error is shown in line 0 of the list. If there are more than 50 entries, the oldest error is overwritten.

13.11.5 Acknowledgment

Introduction

The acknowledgment of a warning, the start inhibit, an error and a limit violation can be realized via a safe digital input F-DI or via the "Fault acknowledgment" bit of the safe process data.

To acknowledge an error or a limit value violation via a safe digital input, an input must be set to "Acknowledge faults" or "Unlatch latched F-DI and acknowledge faults".

Acknowledgment is performed by a 0 → 1 edge. In the following cases, a warning will be indicated after 20 s:

- A permanent high signal is present on the safe digital input to which the acknowledgment has been assigned.
- One of the error acknowledgment bits in the process data is permanently "1".

To acknowledge faults via PROFIsafe, Safety over EtherCAT® or CIP Safety™, the exchange of safe data of the safety option must be fault-free. Faults in the safety option can then be acknowledged by a rising edge via the "Fault acknowledgment" bit in the safe process output data.

A critical error can only be acknowledged by switching the supply voltage off and on.

⚠ DANGER



Depending on the connection, MOVISAFE® CS..A can deactivate the STO safety subfunction after the acknowledgment. This can cause an immediate restart of the system.

Severe or fatal injuries.

- Make sure that no person is in the hazardous area of the system during the acknowledgment.
- Make sure that the STO safety subfunction is active via F-DI or safe communication during the acknowledgment.

Existing limit violations of the safety subfunctions are deleted by parameterizing, creating the acceptance report, and publishing the acceptance. Start inhibit is set to prevent the system from switching to operation afterwards.

For details on the cause of the STO, refer to MOVISUITE® in the menu "Diagnostics" > "MOVISAFE® CS.." in the menu item "STO status" in the parameters *Cause for start inhibit* (8700.124) and *Cause for STO* (8700.85).

Acknowledging a system error

If safe digital inputs with active interlocking are used for acknowledging a system error, adhere to the following sequence:

1. If possible, eliminate the cause of the error.
2. Make sure of the following:
   - No person is in the hazardous area of the system.
   - The STO safety subfunction is activated via F-DI or via safe communication and the SDI and SOS safety subfunctions are deselected and the SLI increment enable has been canceled.
3. Acknowledge the system error.
4. If necessary, re-select the deselected SDI and SOS safety subfunctions and set the SLI increment enable again.

Acknowledging a limit value violation of a safety subfunction

After a limit violation of a safety subfunction has been identified, the status of this function will become inactive. In addition, a fault of the "FS Warning" class will be set.

A limit violation must always be acknowledged.

33955948/EN – 05/2026

A limit violation cannot be acknowledged through deactivation of the safety subfunction. With the exception of this, the parameterization of the fault response is at "F-PI only". With the SSM, SSR, and SLA safety subfunctions, the error is acknowledged by deactivating the safety subfunction.

The acknowledgment always affects all safety subfunctions. The safety subfunction can still be activated during acknowledgment.

Parameterized speed filters of the safety subfunctions that have triggered a limit violation are reset.

Note the following behavior of the safety subfunctions during an acknowledgment:

- SOS, SDI:

  The limit positions are recalculated.
- SLI:

  The actual position is reset. This recalculates the limit position.
- SLS:

  The delay time and the transition ramp will **not** be recalculated; there will be an immediate monitoring of the limit speed.
- SS1/2:

  The delay time and the transition ramp are not recalculated; the final state becomes immediately active (STO, SOS, SLI activation).
- SSR:

  The limit speeds are monitored once the delay time has lapsed.

Acknowledging an input fault

An input fault can occur if one of the following functions is assigned to a two-channel safe digital input F-DI in the function assignment:

- Unlatch F-DI
- Unlatch F-DI and acknowledge fault
- Muting
- Activate test mode.

Before acknowledging an input fault, ensure the following:

- No person is in the hazardous area of the system.
- No DC 24 V signal is present at the corresponding inputs.

13.11.6 "Emergency mode" function

Introduction

The "emergency mode" function can only be triggered using the CBG21A keypad. The "emergency mode" function automatically triggers the "Encoder error muting" function (see chapter "Encoder fault muting" (→ 🗎 442)) and the "Muting safe process output data (F-PO)" function (see chapter "Muting safe process output data (muting F-PO)" (→ 🗎 443)).

33955948/EN – 05/2026

Safety notes



⚠ DANGER

Immediate restart of the system is possible due to the "Emergency mode" function.

Severe or fatal injuries.

- Before activating the "Emergency mode" function, the user must take organizational measures for the protection of personnel and machinery.



⚠ DANGER

The keypad is connected to the wrong device. This can cause immediate restart of the system.

Severe or fatal injuries.

- Before activating the "Emergency mode" function, the user must take organizational measures for the protection of personnel and machinery.
- The keypad must be mechanically connected to the correct device.
- Make sure that you can see the display of the keypad and the system at any time during emergency mode. The connection between the keypad and the device must be designed in such a way that it can be disconnected at any time without tools.

Approved devices

The "Emergency mode" function is permitted for devices with the MOVISAFE® CS..A safety option.

Requirements

- The "Emergency mode" function (index 8707.2) must be enabled.
- To start the "Emergency mode" function, an encoder fault or communication fault must be pending in the F-protocol.

Starting emergency mode

Proceed as follows:

- Select the "Emergency mode" function using the keypad.
- Using the "F-ERR" LED (see chapter ""F-ERR" LED" (→ 🗎 484)), check whether the correct device signals the emergency mode. If the wrong device is flashing, activation of the emergency mode must be canceled immediately.
- If the correct device is selected, the emergency mode ID is displayed. Confirm signaling of the correct device. To do this, enter the displayed emergency mode ID in reverse order and click OK.

Ending emergency mode

- You can end emergency mode in a safety-related manner by interrupting the connection between keypad and device.
- You cannot end emergency mode in a safety-related manner by selecting "End emergency mode" on the keypad.
- Emergency mode is automatically terminated after 5 minutes.

33955948/EN – 05/2026

13.11.7 Device replacement



⚠ WARNING

An incorrect parameterization of the safety option is enabled if the CMM memory module with integrated safety key is inserted incorrectly.

Severe or fatal injuries.

- Ensure that the CMM memory module matching the application is inserted at the correct system position.



INFORMATION

- A faulty CS..A safety option must be taken out of operation within 100 hours.
- No user password is set in a new CS..A safety option. If you have assigned a password in the device that is being replaced, you must reset the password in the replacement device.

Device replacement with MOVI-C® without PC

The MOVI-C® system offers the option to save the application-related data set for the inverter and the data set for the safety option on the memory module in the inverter or on the MOVI-C® CONTROLLER. This step must be performed in advance by the user with the MOVI-C® CONTROLLER.

The following steps must be performed for the actual device replacement:

1. Switch off the device to be replaced.
2. Remove the pluggable CMM memory module with integrated safety key from the device.
3. Replace the device (including MOVISAFE® CS..A safety option).
4. Reinsert the CMM memory module with integrated safety key that was removed in step 2.
5. Carry out a functional test. The checking of all parameters is omitted.

The controller/inverter automatically detects the device replacement and loads the application data set into the MOVISAFE® CS..A safety option. The localized key data set on the pluggable safety key ensures that the correct application data set has been loaded. The MOVISAFE® CS..A safety option is then in the same state that it was in before the device replacement. This means that if the MOVISAFE® CS..A safety option was in the "Accepted" state before the device replacement, it will be in the "Accepted" state again after device replacement. In order to ensure correct connection of the sensors and actuators, a function test of the safety option is required in the case of automatic device replacement function.

Device replacement with MOVISUITE®

For device replacement with MOVISUITE®, proceed as follows:

1. Back up the device data set of the device to be replaced using the menu item [Device] > [PC].
2. Switch off the device to be replaced.
3. Remove the pluggable CMM memory module with integrated safety key from the device.
4. Replace the device (including MOVISAFE® CS..A safety option).

33955948/EN – 05/2026

5. Reinsert the CMM memory module that was removed in step 3.
6. Switch only the DC 24 V control voltage back on.
7. Load the device data set saved in step 1 back onto the new device using the menu item [PC] > [Device].
8. Switch the main power supply (AC 230 V) back on and perform a functional test of the system.

13.12 SEW-EURODRIVE Service

13.12.1 Sending in a device for repair

If a fault cannot be repaired, contact SEW-EURODRIVE Service, see chapter "Contacting SEW-EURODRIVE" (→ 🗎 718).

Always specify the digits of the status label when contacting the SEW-EURODRIVE electronics service team. This will enable our Service personnel to assist you more effectively.

Provide the following information when sending the device in for repair:

- Serial number (see nameplate)
- Type designation
- Unit design
- Short description of the application (application, control type, etc.)
- Type of fault
- Accompanying circumstances
- Your own presumptions
- Unusual events preceding the problems, etc.

13.13 Shutdown

⚠ WARNING



Electric shock due to incompletely discharged capacitors.

Severe or fatal injuries.

- Observe a minimum switch-off time of 10 minutes after disconnecting the power supply.

To shut down the device, de-energize the device using appropriate measures.

⚠ WARNING



Risk of burns due to hot surfaces.

Severe injuries.

- Let the devices cool down before touching them.

13.14 Extended storage

The following table shows the intervals and measures that are relevant for extended storage of the inverters. For all other inverters, no measures are required.

Time interval	Every 2 years
Inverter with 1-phase line connection	Line connections: Connect devices to the line voltage for 5 minutes.

Measures in the event of omitted maintenance

Increase line voltage in stages. The following graduations are recommended:

- Stage 1: AC 0 to 170 V within a few seconds
- Stage 2: AC 170 V for 15 minutes
- Stage 3: AC 200 V for 15 minutes
- Stage 4: AC 240 V for 1 hour

13.15 IT security guidelines for secure disposal

13.15.1 Removing the product from its intended environment



If the data stored on the product is considered relevant for IT security, remove the data as described in the section "Secure removal of data stored in the product." (→ 🗎 712)

Depending on the configuration and firmware, the product can independently transfer data to devices in the environment. In addition, other devices in the environment, such as controllers, HMI, engineering PCs, or operator panels, can read and save data from the product. This includes reference data, configuration data, log data and other data belonging to the product.

If the data stored in the environment is classified as relevant for IT security, remove this data according to the documentation of the respective devices in the environment.

For data that can be saved with the engineering software from SEW-EURODRIVE, refer to "Deleting data saved using the engineering software" (→ 🗎 713).

13.15.2 Secure removal of data stored in the product



Using the MOVISUITE® engineering software, you can delete the data saved in the product or reset them to the factory settings.

The amount of data stored on the product is less than 1 MB.

Proceed as follows:

1. In MOVISUITE®, select the "Reset device parameters" menu item in the "Basic settings" menu of the described product.
2. Click the [Delivery state] button.
3. Perform a power-on reset by briefly switching the line voltage and the 24 V auxiliary supply off and on again.

⇨ All parameter values are overwritten with the values of the delivery state.

This includes the following data, if available for the product described:

- Configuration of the device
- Scope recording of the device

33955948/EN – 05/2026

- Fault memory
- Device name
- IP Address
- Safety-relevant data
- MOVIKIT® program information

The following data is not reset during this procedure and can be modified individually if available on the described product:

- Function activations
- AS-Interface address
- Data set of the safety option
- EtherCAT® device designation
- PROFINET name
- Last detected options

13.15.3 Deleting data saved using the engineering software



The MOVISUITE® engineering software allows you to retrieve all data of the product and save it locally or on remote memory units.

If the data saved in this way is classified as relevant for IT security, delete the data when removing the product from the environment.

When data is saved by an engineering software in the environment of the product, the following data types and data volumes are created:

Software	Data type	Data volume
MOVISUITE®	Proprietary SEW device format	< 1 MB

If a MOVISUITE® project contains an IEC Editor project of a controller, the size of the MOVISUITE® project file can be up to 1 GB. The IEC project of the controller is automatically integrated into the MOVISUITE® project and is not available separately.

When using MOVIRUN® open Editor, the controller project is saved as a standard CODESYS file in PROJECT format. The file size depends on the project, but is usually less than 1 GB.

Removing a customer data backup



You can delete a customer data backup using the MOVISUITE® engineering software. To do so, in the parameter configuration of the corresponding device under [Basic setting] > [Data backup] > [Backup of customer-specific device parameters] click the [Delete] button.

Some of the data of the product is stored on removable storage media. If the data on the removable storage medium is classified as sensitive data from the operator's point of view and is not intended for later use, reset the device to the factory settings before disposing of the data. This also deletes the storage medium content.

13.15.4 Remove product data that has been transferred to devices in the environment



Products with firmware version ≥ V20.00 autonomously transfer data to the environment if you have configured this.

33955948/EN – 05/2026

If the data transferred autonomously to the environment is classified as relevant for IT security, remove the following data according to the documentation of the receiving devices:

- Log data that the product has transferred to a syslog server.

13.16 Waste disposal

Dispose of the product and all parts separately in accordance with their material structure and the national regulations. Put the product through a recycling process or contact a specialist waste disposal company. If possible, divide the product into the following categories:

- Iron, steel, or cast iron
- Stainless steel
- Magnets
- Aluminum
- Copper
- Electronic parts
- Plastics

The following materials are hazardous to health and the environment. These materials must be collected and disposed of separately:

- Oil and grease

  Collect used oil and grease separately according to type. Ensure that the used oil is not mixed with solvent. Dispose of used oil and grease correctly.
- Screens
- Capacitors



Waste disposal according to WEEE Directive 2012/19/EU

This product and its accessories may fall within the scope of the country-specific application of the WEEE Directive. Dispose of the product and its accessories according to the national regulations of your country.

For further information, contact the responsible SEW-EURODRIVE branch or an authorized partner of SEW-EURODRIVE.

33955948/EN – 05/2026

14 Inspection and maintenance

The device is maintenance-free. SEW-EURODRIVE does not stipulate any regular inspection work. However, it is recommended that you check the following components regularly:

- **Connection cables:**

  If cables become damaged or fatigued, replace them immediately.
- **Cooling fins:**

  Remove any deposits to ensure sufficient cooling.

INFORMATION

Only SEW-EURODRIVE may repair the devices.

33955948/EN – 05/2026

15 Appendix

15.1 Abbreviation key

The following table lists the abbreviations that are used in the documentation together with their unit and meaning.

Abbreviation	Unit	Meaning
ASM	–	Asynchronous motor
BG..	–	Inverter size
C	µF	Capacitance
f_{max}	Hz	Maximum output frequency
f_{max}	Hz	Maximum input frequency (encoder input)
f_{line}	Hz	Line frequency
f_{PWM}	kHz	Frequency of the pulse width modulation
h	m	Installation altitude
HF	–	High frequency
I_F	A	Tripping current (braking resistor)
I_{max}	A	Maximum DC link current (specification on the nameplate)
I_{max}	A	Maximum output current (encoder interface)
I_{peak}	A	Output peak current (encoder interface)
I_{A_max}	A	Maximum output current
I_{Appl}	A	Total current of the application
I_{cont}	A	Continuous output current
I_N	A	Nominal output current/nominal current (filter, choke)
I_{line}	A	Nominal line current
I_{DCL_nom}	A	DC link current
L_N	mH	Inductance
LSPM	–	Line Start Permanent Magnet
asl	m	Above sea level, reference for altitudes above sea level
P_{rms}	kW	Effective power (braking resistor)
P_{max}	kW	Maximum power (braking resistor)
P_{Mot}	kW	Motor power of the asynchronous motor
PMSM	–	Permanent-field synchronous motor
P_N	kW	Nominal motor power (rated power)
P_V	W	Power loss
PWM	–	Pulse width modulation
R_{BR}	Ω	Value of the braking resistance
R_{BR_min}	Ω	Minimum value of the braking resistance
R_i	Ω	Input resistance

33955948/EN – 05/2026

Abbreviation	Unit	Meaning
RSM	–	Synchronous reluctance motor
S_N	kVA	Apparent output power
SM	–	Synchronous motor
V_A	V	Inverter output voltage
V_{BR}	V	Brake supply voltage
V_{Drop}	V	Voltage drop
V_N	V	Nominal line voltage (filter, choke)
V_{line}	V	Connection voltage
V_{ZK_nom}	V	Nominal DC link voltage
V_{DCL}	V	DC link voltage
V_{out}	V	DC 24 V to supply STO_P1 and STO_P2
V_S	V	Supply voltage of encoders
V_{S12VG}	V	DC 12 V supply voltage of encoders
V_{P0cold}	V	DC 24 V supply voltage of encoders
V_{I24}	V	Voltage supply for electronics and brake
ϑ_A	°C	Ambient temperature
+ES	–	... with output stage inhibit

33955948/EN – 05/2026

16 Contacting SEW-EURODRIVE

You can find the worldwide contact data and locations on the **SEW-EURODRIVE website** via the following link or the QR code shown below.

https://www.sew-eurodrive.de/contacts-worldwide



33955948/EN – 05/2026

Index

Numerical

24 V supply voltage 334
7-segment display 483
  Fault table 481
  Operating displays 481

A

Abbreviation key 716
Accessories
  Shield plate extension 87
  Standard accessories 121
Acknowledgment of the CS..A safety option
  Acknowledgment of PROFIsafe data exchange 227
Ambient temperature 86
Assist CS..
  Safety concept 205

B

Bore patterns
  Control cabinet rear panel 296
Brake
  Control 154
Brake chopper 336
Brake control 380
  Permitted load 155
Brake output 336
Braking resistor
  Supply cable 172
Braking resistor selection 169
Braking resistors
  Installation 308
  Parallel connection 90, 173, 348
  Thermal overload 173
BS.. touch guard 104
  Dimension sheet 105
  Dimensions 105
  Mounting rail fastening 105
  Part number 104
Built-in encoder EI7C FS properties 363
BW.. braking resistors 89, 90, 345
  Assignment to an inverter 90
  Description 89
  Dimension sheets 101
  Part number 90
  Protecting 345
  Technical data 90

C

Cable installation 322
Calculation of response times
  Deselection of a safety subfunction via safe communication 253
  EDM function response time 254
  Encoder 248
  Fixed response times 248
  Response time in case of limit value violation with active fault response 251
  Response time when reporting the limit value violation via safe communication 252
  Safe communication 249
  Safe digital input F-DI 249
  Selection of a safety subfunction via a safe digital input 250
CBG01A keypad 398
CBG11A keypad 402
  Symbols 403
CBG21A keypad 404
  Icons 405
CFC control mode 41, 135
  Standard asynchronous motors 156
  Synchronous servomotors 156
CiA402 profile 35
CIP Safety™ safety protocol
  Activate CIP Safety™ in the safety option 230
  Addressing 230
  CIP Safety™ service "Safety Reset" 232
  Startup of the safety option 230
Circuit breaker 179, 330
CLH21A
  CLH21A shield plate extension 125
CLH41A
  CLH41A support plate 125
  CLH61A support plate 125
Communication interface 69
Configuration
  For MOVIKIT® Velocity Drive 395
  For parameters ex works 395
  For terminal mode 394

3395948/EN – 05/26

Process 133
Connection
Brake 322
Braking resistor 322
Control cable 323
Encoder 323
Installation instructions 325
Motor 322
Supply system cable 322
To the power terminals 332
Via MOVI-C® CONTROLLER 386
Connection variants 363
Control cabinet rear panel 296
Control mode 41, 134
CFC 41, 135
ELSM® 41, 135
Output frequency 138
Position control 135
Properties 136
Speed control 134, 135
Torque control 135
V/f 41, 134
VFC^{PLUS} 41, 134
Control options 408
Control topologies 36
Copyright notice 9
Covers
Safety covers 302
Touch guards 304
CS..A
Type designation 190
CS..A type designation 190
CSB profile variant "Technology"
Process input data 234
Process output data 233
CSL profile variant "Technology"
Process input data 238
Process output data 236
CSS profile variant "Technology"
Process input data 243
Process output data 241
Current profiles 160

D

Data exchange with higher-level controller
Acknowledgment of the safety option 227
CIP Safety™ safety protocol 229
F-periphery access of the safety option in the TIA Portal 224
Introduction 223
Safety over EtherCAT® safety protocol 227
DC link choke ZD..
Assignment to inverter 118
Description 118
Decimal separator 9
Degree of protection 86
Delivery state 393
Derating
Cable length 165
due to the rotating field frequency 160
Installation altitude 161
Line voltage and temperature 161
Description of the FCBs 141
Designated use 14
Device replacement 698
Memory module 699
Using a keypad 699
Using a MOVI-C® CONTROLLER 699
With MOVI-C® without PC 710
With MOVISUITE® 710
Device structure
CS..A type designation 190
Diagnostics
Evaluating fault messages 476
MOVISUITE® 476
Digital inputs 337
Digital outputs 337
Dimension drawings
Size 0S with CLH21A 124
Size 0S with CLH31A 124
Size 0S with CLH51A 124
Dimension sheets
BW.. braking resistors 101
HD.. output choke 116
HF.. output filter 115
NF.. line filter 107
ZD.. DC link choke 119, 120
Dimensions 86
HD.. output choke 116
HF.. output filter 115
NF.. line filter 107
ZD.. DC link choke 119

3955948/EN – 05/26

Disconnection of a single device
Requirements ... 364
Door mounting frame ... 84
Drive selection ... 148

E

EDM muting ... 444
Electrical installation ... 22
24 V supply voltage ... 334
Brake chopper ... 336
Brake output ... 336
Digital inputs ... 337
Digital outputs ... 337
EI7C FS built-in encoder ... 363
Encoder connection ... 337
General information ... 325
Input fuses ... 178
Installation notes encoder connection ... 337
Miniature circuit breaker ... 178
Motor circuit breaker ... 178
Safe digital inputs (F-DI.) ... 216
Safe disconnection ... 355
Safety notes ... 22
Temperature sensor ... 336
Terminal assignment ... 350
Using the line contactor ... 330
Electronics connection ... 376
Electronics data ... 63
ELSM® control mode ... 41, 135
Embedded safety notes ... 9
EMC-compliant installation ... 173
Installation example ... 324
Encoder ... 42
Electronic nameplate ... 154
Encoder cable requirements
SIN/COS encoder cable ... 215
Encoder connection
Installation notes ... 337
Encoder fault muting ... 442
Encoder requirements
Counting direction ... 214
General requirements ... 213
Preventing the mechanical limit speed from being exceeded ... 215
Quantization error ... 213
Energy saving functions
Partial magnetization ... 184
Standby mode ... 184
Energy-saving function ... 42
Energy-saving functions ... 184
Environmental conditions ... 49
Equipotential bonding ... 321
Error
Evaluating fault messages ... 476
Reset ... 476
Shut-off responses ... 477
Error classes
FS message ... 701
FS warning ... 701
FS – critical error ... 703
FS – encoder error ... 702
FS – input error ... 702
Error diagnostics
Error memory ... 706
Error messages ... 704
With MOVISUITE® Assist CS ... 705
With PROFIsafe connection ... 705
Error display
7-segment display ... 483
Error messages
With parameterizable response ... 477
Error states of the CS..A safety option
Error responses ... 701
Important information ... 701
Explosion-protected AC motors ... 153
Extended storage ... 712

F

F process data profile ... 233
CSB profile variant "Technology" ... 233
CSL profile variant "Technology" ... 236
Fault classes
Error messages ... 702
FS – output fault ... 702
FS – system error ... 703
Fault table
7-segment display ... 481
FCB concept ... 34, 140
Description of the FCBs ... 141
FCB description ... 141

3395948/EN – 05/26

FCBs
List ... 140
Fieldbus interface
CFN ... 67
Flux optimization ... 184
Flying start ... 42
F-periphery access of the safety option in the TIA Portal
F-periphery data component of the safety option ... 225
PROFIsafe address type 1 ... 225
PROFIsafe address type 2 ... 225
PROFIsafe version 2.4 ... 224
PROFIsafe version 2.6 ... 225
F-process data profile
CSL profile variant "System" ... 240
CSS profile variant "System" ... 246
Free text ... 292
FS standards ... 190
FS validity ... 190
Function control block ... 140
Functional safety
Permitted devices ... 207
Safe state STO, safety option CS..A ... 192

G

Group drive and multi-motor drive ... 151
Group drives ... 42

H

Hazard symbols
Meaning ... 8
HD.. output choke ... 115
Description ... 115
Dimension sheets ... 116
Dimensions ... 116
Part number ... 115
Technical data ... 115
HF.. output filter ... 114
Description ... 114
Dimension sheets ... 115
Dimensions ... 115
Part number ... 114
Technical data ... 114

I

Industrial security ... 30
Information
Installation ... 295
Transport ... 17, 18, 19
Input fuses ... 178
Inspection ... 715
Installation
Braking resistor BW100-002/M ... 309
Braking resistor BW120-001 ... 309
Braking resistors ... 308
Line choke ... 313, 349
Output choke ... 316
Output filter ... 315
Requirements ... 295
Safety notes ... 22
Tightening torques ... 327
Installation (electrical)
Equipotential bonding ... 321
Installation instructions ... 325
Line protection ... 179, 330
Protection devices ... 332
Residual current device ... 179, 330
Installation instructions ... 325
Installation of EI7C FS built-in encoder ... 363
Interfaces ... 86
Interference immunity ... 86
Internal safe digital output (F-DO_STO)
F-DO_STO output ... 223

L

Leakage current ... 331
LED
RUN ... 487
LED displays
"BE" LED ... 493
"BF" LED ... 488
"BS" LED ... 492
"LNK/ACT" LED ... 490, 492, 493
"NS" LED ... 490
"US1" LED ... 489
Lifting applications ... 16, 390
Line components
Line contactor ... 179
Line contactor ... 330
Line protection ... 179, 330

33955948/EN – 05/26

M

Maintenance 715
Manual mode
  CBG22A 473
  With CBG01A, CBG11A, CBG21A 473
  With CBG21A 473
Mass 86
Mechanical installation
  Installation notes 295
  Requirements 295
Memory module 76, 699
Miniature circuit breaker 178
Minimum clearance 295
Modification/handling with changes to the device 700
Module automation 38
Motion control 38
Motor
  Electronic nameplate 154
Motor circuit breaker 178
Motor control 41
Motor protection 41
Motor protection without temperature sensor 151
Motors that can be connected 149
Mounting position 295
MOVIKIT® Drive 34
MOVILINK® DDI
  Disconnect connector 339
MOVISAFE® CSO characteristic safety values ... 75
MOVISUITE®
  Evaluating error messages 476
Multi-motor drive and group drive 151
Muting safe process output data (F-PO) 443

N

Nameplate status data
  Size 3 – 8 291
  Sizes 0S and 0L 291
Nameplates 291
  Nameplate status data 291
  System nameplate 292
ND.. line choke 110
  Description 110
  Part number 110
  Technical data 110
NF.. line filter
  Connection 349
  Description 106
  Dimension sheets 107
  Dimensions 107
  Installation 314
  Part number 106
  Technical data 106
Notes
  Designation in the documentation 8
  Meaning of the hazard symbols 8

O

Online Support 33
Operable motors 41
Operating display 484
Operating displays 484
Operating states of the CS..A safety card 474
  Operating state "Safe state" after critical fault 474
Operating states of the CS..A safety option
  "Operation" operating state 474
  "Parameterization" operating state 474
Operation 473
  7-segment display 481
  In noise-sensitive environments 155
  Memory module 76
  Responses to error reset 480
  Safety notes 23
  Without startup 394
Output filter 42
Overload capacity 160
Overload relay 89
Overview of variants 27

P

Parameterizing the safety subfunctions
  EDM muting 444
  Encoder fault muting 442
  Muting safe process output data (F-PO) 443
  Prerequisites 420
  Test mode 444
Part number
  BS.. touch guard 104
  Carrying aid 121
  Connector 122

3395948/EN – 05/26

HD.. output choke ... 115
HF.. output filter ... 114
Interface adapter ... 86
ND.. line choke ... 110
NF.. line filter ... 106
Plastic cover ... 121
Shield plate ... 121
ZD.. DC link choke ... 118
Partial magnetization ... 184
PC connection ... 386
PE connection ... 331
Position control
VFC^{PLUS} mode ... 135
Prefabricated cables
System bus cables ... 274
Process input data
Substitute values ... 246
Product description
Control mode ... 41
Energy-saving functions ... 184
FCB concept ... 140
Product names ... 9
PROFIsafe safety protocol
Number of safety options on the MOVI-C® CONTROLLER ... 223
Project planning ... 132
Control mode ... 134
Drive selection ... 148
Explosion-protected AC motors ... 153
Group drive and multi-motor drive ... 151
Motors that can be connected ... 149
Requirements for the brake control ... 154
Selection of the braking resistor ... 169
SEW Workbench ... 132
Project planning example ... 183
Protection devices ... 332
Protective separation ... 22, 332

Q

Quantization error
Position ... 213
Quantization fault
Acceleration ... 214
Velocity ... 213

R

RCD (residual current device) ... 179, 330
Removing stored data ... 712
Repair ... 711
Repairs ... 715
Requirements for startup ... 393
Requirements for the brake control ... 154
Reset ... 476
Residual current device ... 179, 330
Response times
Calculation of response times ... 248
Introduction ... 247
STO safety subfunction ... 248
Responses to error reset ... 480
Restoring the delivery state ... 471
Restriction of use ... 16
Rights to claim under limited warranty ... 9
Routing of power and coaxial cables ... 340
Size 5 ... 341
Size 6 ... 341
Sizes 7, 8 ... 342

S

Safe digital inputs ... 73
Safe digital inputs (F-DI.)
Discrepancy time monitoring ... 217
Latching ... 218
Possible connections ... 216
Safe digital inputs (F-DI..)
Active sensors (two-channel) ... 357
Contact-equipped sensors (single-channel) ... 355
Contact-equipped sensors (two-channel) ... 356
Pulsed voltage supply and line diagnostics ... 219
Sensors with semiconductor outputs (OSSD, two-channel) ... 359
Signal monitoring ... 219
Safe digital outputs (F-DO..)
Actuator (one-channel, sourcing output) ... 362
Capacitive loads ... 221
General information ... 219
Inductive loads ... 221
Information about line diagnostics and test pulses ... 222
Ohmic loads ... 222
Safety concept
Assist CS.. ... 205

3955948/EN – 05/26

Identification and authentication 195
Notes on stop categories 194
Pluggable safety key 194
Report and safety check 195
Restrictions 205
Safety concept of Assist CS..
Safety parameters 205
Test concept and test procedure 206
Safety conditions
Encoder requirements 213
Safety controllers, requirements for use 365
Safety encoders approved by SEW-EURODRIVE
for AC motors and asynchronous servomotors 213
for servomotors 213
Safety notes
Installation 22
Meaning of the hazard symbols 8
Preliminary information 10
Regenerative operation 22
Setup 22
Structure of section-related safety notes 8
Structure of the embedded safety notes 9
Safety relays, requirements 364
Safety requirements 206
Acceptance 216
Encoder cable requirements 215
Requirements for stopping in an emergency in accordance with EN 60204-1 (emergency stop) 212
Safety subfunctions
SBC – Safe Brake Control 197
SDI – Safe Direction 203
SLA – Safely Limited Acceleration 204
SLI – Safely Limited Increment 204
SLS – Safely Limited Speed 202
SOS – Safe Operating Stop 201
SS1-r – Safe Stop 1 198
SS1-t – Safe Stop 1 198
SS2-r – Safe Stop 2 200
SS2-t – Safe Stop 2 199
SSM – Safe Speed Monitoring 202
SSR – Safe Speed Range 203
STO – Safe Torque Off 197
Safety-relevant acceptance
Creating an acceptance report 470
Process 469
Publishing acceptance 471
Structure of the acceptance report 470
SBC – Safe Brake Control 197
SDI – Safe Direction 203
Section-related safety notes 8
Selection of the braking resistor 169
Sensor supply 74
Separation, protective 22
Service 476
Error diagnostics 704
Error states of the CS..A safety option 701
Evaluating fault messages 476
Extended storage 712
Important information for device replacement 710
Inspection/maintenance 715
Modification/handling with changes to the device 700
MOVISUITE® 476
Reset of fault messages 476
SEW-EURODRIVE Service 711
Shutdown 711
Shut-off responses 477
SEW Workbench 132
Shield plate 299
Shutdown 711
Shut-off responses 477
Signal terminal overview 378
Signal words in safety notes 8
Single-axis automation 37
SLA – Safely Limited Acceleration 204
SLI – Safely Limited Increment 204
SLS – Safely Limited Speed 202
SOS – Safe Operating Stop 201
Speed control
V/f mode 134
VFC^{PLUS} mode 135
SS1-r – Safe Stop 1 198
SS1-r safety subfunction with MOVISAFE® CS..A
Fault response on encoder fault 429
SS1-t – Safe Stop 1 198
SS1-t safety subfunction with MOVISAFE® CS..A
Fault response on limit value violation 428
SS2-r – Safe Stop 2 200
SS2-r safety subfunction with MOVISAFE® CS..A

3395948/EN – 05/26

Fault response on encoder fault 432
Fault response on limit value violation 432
SS2-t – Safe Stop 2 199
SS2-t safety subfunction with MOVISAFE® CS..A
Fault response on encoder fault 430
Fault response on limit value violation 430
SSM – Safe Speed Monitoring 202
SSR – Safe Speed Range 203
Standard accessories 121
Standby mode 184
Standstill current function 42
Startup 390
Application-oriented 408
Lifting applications 390
Operating states of the CS..A safety option 474
Parameterizing the safety subfunctions 420
Prerequisites 393
Restoring the delivery state 471
Safety notes 23
Safety option at the safety protocol 446
Safety-relevant acceptance 469
Setting the maximum test duration for a load with unknown capacitance 424
Startup information 390
With ex works parameters 33
With the CBG01A keypad 397, 398
With the CBG11A keypad 402
With the CBG21A keypad 403, 404
Startup of fieldbus and higher-level F-PLC
Setting the PROFIsafe destination address 447
Startup requirements 393
Startup variants
Variant 1: Startup with default parameterization 422
Status display 484
Status displays 484
Status LEDs
"F-ERR" LED 484
"F-RUN" LED 485
STO – Safe Torque Off 197
Storage temperature 86
System bus cables 274
System nameplate
Device status 292
Serial number 292
Year of manufacture 292

T

Target group 11
Technical data
BW.. braking resistors 90
General electrical data 73
General technical data 48
HD.. output choke 115
HF.. output filter 114
MOVISAFE® CSB characteristic safety values 75
MOVISAFE® CSL characteristic safety values 76
MOVISAFE® CSS characteristic safety values 76
ND.. line choke 110
NF.. line filter 106
Safe digital inputs 73
Safe digital outputs 74
Sensor supply 74
STO safety subfunction 73
USM21A interface adapter 86
ZD.. DC link choke 118
Technologies 30
Technology functions 43
Counter function 43
PID controller 43
Touchprobe 43
Temperature evaluation 336
Temperature sensor 336
Temperature switch 89
Terminal assignment
Basic device 350
Information 349
Terminal control 36
Three-wire brake 154
Tightening torques 327
Tools 32
Topology
POWERLINK 40
Torque control
VFC^{PLUS} mode 135
Trademarks 9
Transport information
Size 5 17
Size 6 18
Size 8 19

3955948/EN – 05/26

Sizes 6 – 7 18
Type designation 293

U

UL-compliant installation 185
USM21A interface adapter
Part number 86
Technical data 86

V

V/f control mode 41, 134
VFC^{PLUS} control mode 41, 134

W

Warnings
Designation in the documentation 8
Wiring diagrams 369
Brake control 380
Power connection 369
Workbench 132

Z

ZD.. DC link choke 118
Dimension sheets 119
Dimensions 119
Part number 118
Technical data 118

33955948/EN – 05/26

IoT App
DriveRadar®

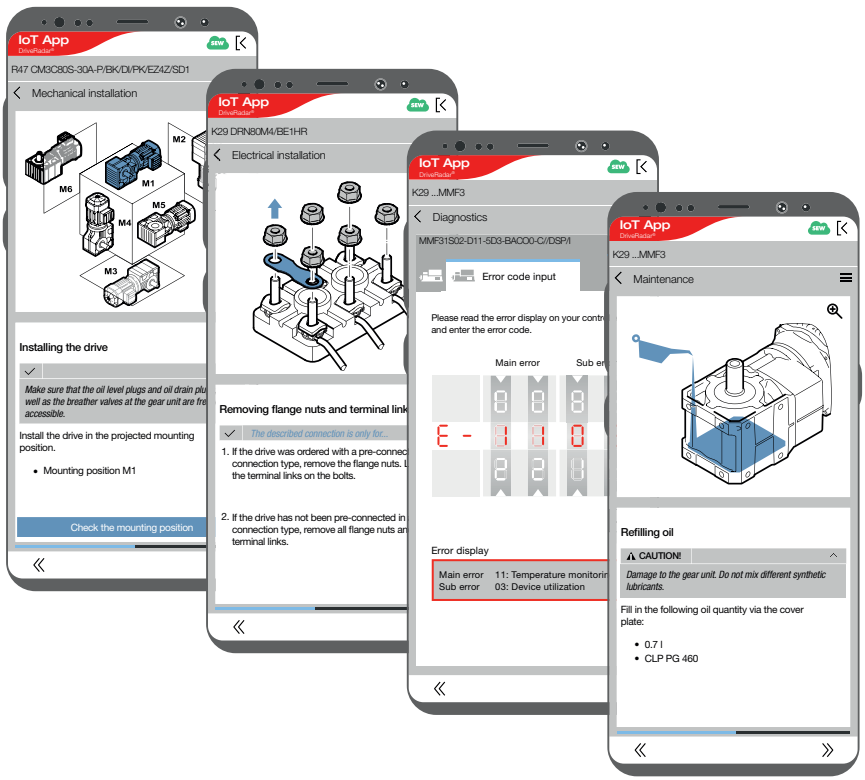

https://iotapp.io

Google Play App Store

THE GREEN SIDE OF DRIVE

Documentation and technical information on your smartphone – paperless and always available





SEW-EURODRIVE GmbH & Co KG
Ernst-Blickle-Str. 42
76646 BRUCHSAL
GERMANY
Tel. +49 7251 75-0
Fax +49 7251 75-1970
sew@sew-eurodrive.com
→ www.sew-eurodrive.com